dock2 marineparts

Katalog

YAMAHA

2020-21

IMPORTANTE

LOS PRODUCTOS QUE APARECEN EN NUESTROS CATALOGOS SON VÁLIDOS Y COMPATIBLES CON LOS MOTORES Y TRANSMISIONES DE LAS MARCAS ORIGINALES QUE APARECEN EN CADA SECCIÓN. EN ALGUNOS CASOS TAMBIÉN SUMINISTRAMOS RECAMBIOS ORIGINALES. ESTA INFORMACIÓN APARECE CON LA REFERENCIA EN EL MOMENTO DE CONFIRMAR EL PEDIDO POR NUESTRA WEB.
LA IMÁGENES AQUÍ CONTENIDAS PUEDEN NO CORRESPONDER CON TOTAL PRECISIÓN AL PRODUCTO SUMINISTRADO. RECAMBIOS MARINOS, S.L. SE RESERVA EL DERECHO DE ANULAR O CAMBIAR PRODUCTOS SIN PREVIO AVISO.

IMPORTANT

THE PRODUCTS THAT APPEAR IN OUR CATALOGS ARE VALID AND COMPATIBLE WITH THE MOTORS AND TRANSMISSIONS OF THE ORIGINAL BRANDS THAT APPEAR IN EACH SECTION. IN SOME CASES WE ALSO SUPPLIED ORIGINAL SPARE PARTS. THIS INFORMATION APPEARS WITH THE REFERENCE AT THE TIME OF CONFIRMING THE ORDER BY OUR WEB. IMAGES CONTAINED HERE MAY NOT CORRESPOND WITH TOTAL ACCURACY TO THE PRODUCT SUPPLIED. RECAMBIOS MARINOS, S.L. RESERVES THE RIGHT TO CANCEL OR CHANGE PRODUCTS WITHOUT PRIOR NOTICE.

IMPORTANTE

I PRODOTTI CHE COMPAIONO NEI NOSTRI CATALOGHI SONO VALIDI E COMPATIBILI CON I MOTORI E LE TRASMISSIONI DEI MARCHI ORIGINALI CHE APPAIONO IN OGNI SEZIONE.
IN ALCUNI CASI ABBIAMO FORNITO ANCHE RICAMBI ORIGINALI. QUESTA INFORMAZIONE RISULTA CON IL RIFERIMENTO AL MOMENTO DELLA CONFERMA DELL'ORDINE DA PARTE DEL NOSTRO WEB.
LE IMMAGINI QUI CONTENUTE POTREBBERO NON CORRISPONDERE ESATTAMENTE AL PRODOTTO FORNITO. RECAMBIOS MARINOS, S.L., SI RISERVA IL DIRITTO DI CANCELLARE O MODIFICARE I PRODOTTI SENZA PREAVVISO.

IMPORTANT

LES PRODUITS QUI FIGURENT DANS NOS CATALOGUES SONT VALIDES ET COMPATIBLES AVEC LES MOTEURS ET LESTRANSMISSIONS DES MARQUES ORIGINALES QUI SONT PRESENTES DANS CHAQUE SECTION. DANS CERTAINS CAS NOUS FOURNISSONS EGALEMENT DES PIECES DE RECHANGE ORIGINALES. CETTE INFORMATION EST MENTIONNEE AVEC LA REFERENCE SUR NOTRE SITE WEB. LES IMAGES CONTENUES DANS CE DOCUMENT PEUVENT NE PAS CORRESPONDRE AVEC UNE PRECISION TOTALE AU PRODUIT FOURNI. RECAMBIOS MARINOS SL SE RESERVE LE DROIT D'ANNULER OU DE MODIFIER DES PRODUITS SANS PREAVIS.

ÍNDICE accesorios	Accessories Table of contents	INDICE accessori	INDEX accessoires	
TX MARINE	TX MARINE	TX MARINE	TX MARINE	4
SOPORTES	STANDS	SUPPORTI	SUPPORTS	8
DIRECCIÓN MECÁNICA	STEERING SYSTEM	TIMONERIA MECCANICA	DIRECTION MÉCANIQUE	12
DIRECCIÓN HIDRÁULICA	HYDRAULICS STEERING SYSTEM	TIMONERIA IDRAULICA	DIRECTION HYDRAULIQUE	14
MANDOS UNIVERSALES Y ACCESORIOS	UNIVERSAL CONTROLS AND ACCESSORIES	CONTROLLI UNIVERSALI E ACCESSORI	COMMANDES UNIVERSELLES ET ACCESSORIES	17
SISTEMA DE GOBIERNO Y ACCESORIOS DE INSTALACIÓN	STEERING SYSTEM ET INSTALATION ACCESSORIES	SISTEMA DI GUIDA E ACCESSORI DIREZIONE	SYSTÈME DE DIRECTION ET ACCESSORIES D'INSTALLATION	20
CABLES MANDOS	CONTROL CABLES	CAVI COMANDO	CÂBLES DE COMMANDE	25
SISTEMA DE COMBUSTIBLE	FUEL SYSTEM	SISTEMA DI COMBUSTIBILE	SYSTÈME DE CARBURANT	27
FILTROS DE COMBUSTIBLE	FUEL FILTERS	FILTRO BENZINA	FILTRES À CARBURAT	29
SISTEMA ELÉCTRICO	ELECTRIC SYSTEM	SISTEMA ELETTRICO	SYSTÈME ÉLECTRIQUE	32
LUBRICANTES Y PINTURAS	LUBRICANTS ET PAINTS	LUBRIFICANTI E PITTURE	LUBRIFIANTS ET PEINTURES	36
ACCESORIOS Y HERRAMIENTAS DE INSTALACIÓN	ACCESSORIES AND INSTALATION TOOLS	ACCESSORI E ATTREZZI ISTALAZIONE	ACCESSOIRES ET OUTILS D'INSTALLATION	45
ESTABILIZADORES, ELEVADORES Y SEGURIDAD	HYDROFOIL STABILIZER AND SECURITY	STABILIZATORI, ASCENSORI E SICUREZZA	STABILISATEURS, POWER TRIM-LIFT ET SÉCURITÉ	54



AXONE NEMO

La primera diagnosis Smart en el mundo

Axone Nemo es un potente tablet diseñado para asegurar al mecánico un óptimo uso, tanto en el entorno de taller, como en las intervenciones en el exterior.
Permite efectuar operaciones de diagnosis a gran velocidad. El chasis de magnesio le proporciona una mayor robustez y rigidez ante los golpes, muy ligero con gran capacidad de disipación de la temperatura interna.
El software operativo IDC5 destaca todas sus características, además del "touch gesture" para alcanzar en poco tiempo las funciones deseadas.

The first Smart diagnosis in the world

Axone Nemo is a powerful tablet designed to ensure the mechanic optimal use, both in the workshop environment, as interventions abroad.
It allows to carry out diagnosis operations at high speed. The magnesium chassis provides greater robustness and rigidity against shock, very light with great capacity to dissipate the internal temperature.
The IDC5 operating software highlights all its features, in addition to the "touch gesture" to reach the desired functions in a short time.

La prima diagnosi Smart nel mondo

Axone Nemo è un potente tablet creato per assicurare al meccanico un ottimo uso, sia nelle officine sia negli interventi all'esterno.
Permette di effettuare operazioni di diagnosi a gran velocità. La scocca in magnesio gli dona una maggior robustezza contro i colpi, molto leggero.
Il software operativo IDC5 evidenzia tutte le sue caratteristiche, come il "touch gesture" per eseguire in poco tempo le funzioni desiderate.

Le premier outil de diagnostic intelligent au monde

Axone Nemo est une tablette puissante conçue pour assurer une utilisation mécanique optimale, aussi bien dans un atelier que lors des interventions à l'extérieur. Il permet d'effectuer des opérations de diagnostic à grande vitesse. Le chassis en magnésium offre une plus grande robustesse contre les chocs, très léger avec une grande capacité à dissiper la température interne. Le logiciel IDC5 met en évidence toutes ses fonctionnalités.

12" (2160 x 1440)
Intel Quad Core N3160
8 GB RAM
250 GB
WIFI double channel
Bluetooth 4.0 Low Energy
2 camera x 5 Megapixels

SOFTWARE IDC5

IDC5 es la última evolución de TEXA, gracias a la reescritura del código se incrementa la velocidad de trabajo, lo que garantiza una entrada de comunicación con la centralita casi inmediata. La nueva función "Esquemas eléctricos interactivos" permite consultar los esquemas eléctricos aprovechando las animaciones de los dispositivos implicados y generando un mapa interactivo con flujos de señales entrada o salida de centralitas.

IDC5 is the latest evolution of TEXA, thanks to the rewriting of the code the working speed is increased, which guarantees a communication input with the control unit almost immediately. The new function "Interactive electrical diagrams" allows consulting the electrical diagrams taking advantage of the animations of the devices involved and generating an interactive map with flows of signals input or output of control units.

IDC5 è l'ultima evoluzione di TEXA, grazie ai nuovi aggiornamenti, si incrementa la velocità di lavoro, che garantisce la comunicazione quasi immediata con l'unità di controllo. La nuova funzione "Diagrammi interattivi elettronici" permettono di consultare i diagrammi elettronici con l'animazione dei led generando una mappa interattiva con un flusso di segnali in entrata e in uscita della centralina.

IDC5 est la dernière évolution du célèbre logiciel TEXA, grâce à une importante réécriture du programme, la rapidité est encore augmentée, garantissant une entrée en communication presque immédiate avec les calculateurs. La nouvelle fonctionnalité appelée "Schémas Electriques Interactif" est très intéressante car elle permet de consulter les schémas électriques en exploitant les animations des dispositifs concernés et en générant une cartographie interactive avec les flux de signaux d'entrée ou de sortie des calculateurs.



Ref.				
RECAXONENEMO	Axone Nemo			Axone Nemo
RECD06591	Navigator TXB Evolution			Navigator TXB Evolution
RECD127X0	Axone Nemo + Navigator TXB Marine			Axone Nemo + Navigator TXB
RECZ06590PC	Navigator TXB + PC	Navigator TXB + Labtop	Navigator TXB + PC	Navigator TXB + Pc portable
REC3901775	Kit maleta para guardar cables de interface	Hand case for harnesses	Kit per cavi intergaccia	Valise pour ranger les câbles d'interface
RECAGA00M1	Contrato de actualización software (y renovación anual).	Software contract and annual renovation	Contratto software (e rinnovo annuale).	Contrat de mise à jour logicielle (et renouvellement annuel).

TEXA

NAVIGATOR TXB EVOLUTION & AXONE NEMO / PC



SRAM	16Mb
MEMORY	NAND Flash 8 GB
BLUETOOTH	

NAVIGATOR TXB EVOLUTION

La evolución de la diagnosis, diseñado y desarrollado especificamente para el ambiente Marino.

Las características del hardware lo compatibilizan con todos los protocolos actualmente existentes, su conector CPC de 16 polos integrados, permite el uso de todos los cables de diagnosis. Es compatible con AXONE NEMO y PC. Gracias a la tecnología Bluetooth el técnico podrá realizar una cómoda diagnosis sin cables de por medio, incluso desde el pantalán.

Extremadamente potente, permite al mecánico una gestión fácil de los archivos de mapa. Los estandares CAN soportados incluyen la posibilidad de gestión CAN single wire y un CAN controller más para la diagnosis sobre más redes.

Permite la grabación de la sesión de diagnosis en modalidad “pruebas dinámicas”, es decir con la embarcación en movimiento, para localizar averías específicas que no se podrían verificar en el amarre. La interfaz reconstruye una panorámica completa de la situación en la que la anomalía se ha verificado, proporcionando importantes elementos de análisis para identificar las causas de la avería.

The evolution of the diagnosis, designed and developed specifically for the marine environment.

The characteristics of the hardware make it compatible with all currently existing protocols, its integrated 16-pole CPC connector, allows the use of all diagnostic cables. It is compatible with AXONE NEMO and PC. Thanks to Bluetooth technology, the technician can make a comfortable diagnosis without wires, even from the jetty.

Extremely powerful, they allow the mechanic to easily manage the map files. The CAN standards supported include the possibility of CAN single wire management and a further CAN controller for the diagnosis of more networks.

It allows the recording of the diagnosis session in “dynamic tests” mode, that is to say with the boat in motion, to locate specific faults that could not be verified in the mooring. The interface reconstructs a complete panorama of the situation in which the anomaly has been verified, providing important elements of analysis to identify the causes of the failure.

L’evoluzione della diagnosi, disegnato e sviluppato specificamente per l’ambiente Marino.

Le caratteristiche hardware lo rendono compatibile con tutti i protocolli attualmente esistenti, il suo connettore CPC 16 poli integrato consente l’utilizzo di tutti i cavi diagnostici. E’ compatibile con AXONE NEMO e PC. Grazie alla tecnología Bluetooth il tecnico potrá realizzare una diagnosi senza cavi in mezzo, anche dal molo.

Estremamente potente, permette al meccanico una gestione facile degli archivi della mappa. Gli standard CAN supportati offrono la possibilità di gestire: CAN single wire e un altro CAN controller per eseguire le diagnosi su più reti.

Permette la registrazione di una sessione di diagnosi in modalità “prova dinamica”, ovvero con l’imbarcazione in movimiento, per constatare avarie specifiche che non si possono verificare in officina. La sua interfaccia permette di ricostruire una panoramica completa della situazione in cui l’anomalia si è verificata, fornendo gli elementi per identificare le eventuali avarie.

L’évolution du diagnostic, dessiner et développer spécialement pour l’environnement Marin

Les caractéristiques du matériel le rendent compatible avec tous les protocoles existants, son connecteur CPC 16 pôles intégré permet l’utilisation de tous les câbles de diagnostic.Il est compatible avec Axone Nemo et Pc. Gr^^ace à la technologie Bluetooth, le technicien peut effectuer un diagnostic sans fil, même depuis le quai. Extrêmement puissant, il permet au mécanicien de gérer facilement les fichiers des cartes. Les normes CAN prises en charge incluent la possibilité d’une gestion CAN à fil unique et un autre contrôleur CAN pour le diagnostic en réseaux. Il permet l’enregistrement de la séance de diagnostic en mode << test dynamique>> c’est à dire avec le bateau en mouvement pour localiser des défauts spécifiques non vérifiables en atelier. L’interface reconstruit un panorama complet de la situation dans laquelle l’anomalie a été constatée, fournissant des éléments d’analyse importants pour identifier les causes de la panne.

TEXA

APLICACIONES APPLICATIONS APPLICAZIONI APPLICATIONS

Consulte la lista actualizada de aplicaciones en: | See the updated list of applications in: | Vedi l'elenco aggiornato delle applicazioni in: | Consultez la liste mise à jour des applications sur:

www.texaiberica.com/cobertura-diagnosis

MOTORES INTRABORDA
INBOARD ENGINES
MOTORI ENTROBORDO
MOTEURS IN-BORD

CATERPILLAR	3196, 3176, 3126B, 3508B, 3508C, C12, C12 Acert, C18 Acert Tier 2, C32 Acert IMO II, C32 Acert Tier 2, C32 Acert Tier 2 HP, 3512 B HD,C3512B, 3512C HD, 3512C, 3516B HD, 32 Acert Tier 2 H.P. Recreational, C32 Acert Tier 3, C7, C7 Acert, C9 Acert., 3516B, 3516C HD, 3516C, C15 Acert, C6.6 Acert
CRUSADER	5.0. 5.7. 6.0. 8.1 MPI & HO MPI
CUMMINS / MW	QSD2.0-115 / 130 / 150 / 170, QSD2.8-220, QSD4.2-270 / 320 / 350, QSB5.9 / 6.7, QSC8.3, QSK19, QSL9, QSM11 (Sistema Inyección Bosch | System injection Bosch | Sistema Iniezione Bosch | Système d'injection Bosch) Comon Rail
FIAT	C13, C78, C87, GE CURSOR 250E, 350E, 400E, N40, N60, N67, S30
FNM	HPEP, HPE 80-300 HP
HYUNDAI SEASALL	D150P/S, D170J/P/S, S220P/S, S250J/P/S, U125J/P/S
ILMOR	5.7L. 6.0L. 6.2L. MV-8
INDMAR	5.7, 6.0, 8.1, Steyr 256 Diesel
KOHLER	
LOMBARDINI Marine	LDW 194 JMT, LDW 240 JMT
MAN	D2868, V8-1000, V8-1200
MERCRUISER	350, 377, 454, 496, 496MAG, 3.0L, 4.3L, 5.0L, 5.7L, 6.2L, 7.4L, 8.1L, 8.2L, TBI, MPI, Black Scorpion, Vazer, Mandos SmartCraft, D2.8D-Tronic
MERCRUISER Diesel	VM D-Tronic, VM (no D-Tronic), MD2.0-115/130/150/170, MD2.8-270/320/350,TDI3.0-230/260, TDI4.2
MERCURY Racing Inbord	SCI, EFI, QC4V, 500EFI, 520, 525EFI, 540, 565, 575, 600, 850, Scorpion 377
MTU	MDEC C2
PCM MARINE Engines	5.0L, 5.7L, 6.0L, 8.1L
PERKINS	1106C-E6OTA 6.0L
SEA-DOO	Speedster, Challenger, Utopia, Islandia, Wake, Wake Speedster, Sportster
SISU AGCO	44 CTIM-2V, 49/66/74/84 CTIM-4V
STEYR MOTORS	MO306H43WJ, MO54NA33, MO84K32, MO94K33, MO114K33, MO126M28, MO144M38, MO156K25, MO164M40, MO166M28, MO174V40, MO196K35, MO236K42, MO256H45, MO256H43, MO286H43 SE126E25, SE156E26, SE196E35, SE236E40, SE236S36 SE266, SE286, SE306J38
VM MOTORI	2.8L, 4.2L D-Tronic, MD704, MD706, MR504LB
VOLKSWAGEN Marine	SDI, TDI
VOLVO PENTA	KAD, EDC, EGC, EVC, GXI, OSI, GI, GSI, OSXI, IPS, TAMD
YANMAR	4BY2-150 / 180, 6BY2-220 / 260 (Sistema Inyección Bosch | System injection Bosch | Sistema Iniezione Bosch | Système d'injection Bosch) 4BY3-150/180, 4JH, 6BY3-220/260, 6LY3, 8LV-320/350/370

MOTORES FUERABORDA
OUTBOARD ENGINES
MOTORI FUORIBORDO
MOTEURS HORS-BORD

EVINRUDE	(90 - 250 Ficht Ram) E-Tec 25 - 300 HP, DFi
HONDA Marine	BF 40-250 HP
JOHNSON	4 Stroke
MARINER	4 Stroke, OptiMax, Verado, DFI, EFI
MERCURY	4 Stroke, OptiMax, Verado, DFI, EFI
MERCURY Racing	OPTIMAX, DSi, VERADO 400R
PARSUN	40 EFi
SELVA Marine	4 S troke EFi
SUZUKI Marine	DF 40 -300 HP
TOHATSU	MFS, BFW, BFT
YAMAHA Marine	F, T, Z 30 - 350 HP

MOTOS DE AGUA
PWC
MOTO D'ACQUA
SCOOTER DES MERS

HONDA Marine	Aquatrax
KAWASAKI Marine	STX, Ultra.
SEA-DOO	GTI, GTX, RXP, RXT,GTR, GTS, GTX-S, Spark, Wake Pro, Wake
YAMAHA Marine	Waverunner FX, FZR, FZS, GP, VX

SIN CABLES DE INTERFACE
WITHOUT INTERFACE CABLE
SENZA CAVI INTERFACE
SANS CABLES D'INTERFACE

		CABLE WIRE CAVI CÂBLE
REC3902417	OBD, FNM Marine, VOLKSWAGEN, HYUNDAI	AM08
REC3902659	Marine FPT	AM11
REC3904277	Marine CUMMINS, MERCURISER Diesel, VM (not D-Tronic), KOHLER	AM24A
REC3905159	Marine VOLVO EGC 05/05>05/07	AM26
REC3905286	Marine MTU-MDEC	AM28
REC3905397	Marine CATERPILLAR, PERKINS	AM29
REC3906219	Marine TOHATSU	AM30
REC3906891	Marine MAN	AM31
REC3905015	Personal Water Craft KAWASAKI cable kit	

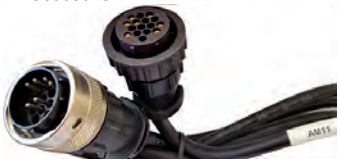
REC3902659


REC3902417


REC3904277


REC3905159

Conector redondo
Round connector
Connettore rotondo
Connecteur rond


REC3905397


REC3906219


REC3905286


REC3906891


REC3905015

INTERFACE AM01

Ref. AM01
REC3902358



		CABLE WIRE CAVI CÂBLE
REC3902407	Marine HONDA / TOHATSU, PGM (FI)	AM02
REC3902247	Marine 2 pin MERCURY, MERCRUISER	AM04
REC3902250	Marine 4 vie MERCURY, MERCRUISER	AM05
REC3902413	Marine YAMAHA / SELVA	AM06
REC3902414	Marine 6 pin VOLVO PENTA	AM07
REC3902467	Marine VOLVO KAD - TAMD	AM09
REC3902864	Marine STEYR	AM12
REC3902865	Marine EVINRUDE	AM13
REC3902907	Marine VOLVO, MERCRUISER (gasolina | fuel | benzina | essence), MEFI-4, 4B,3,2,1, CRUSADER	AM14
REC3902931	Marine YANMAR	AM15
REC3903560	Marine SUZUKI	AM22
REC3905265	Marine MERCRUISER / VM D-Tronic	AM27
REC3908405	PARSUNS	3151/ AP54



REC3902247



REC3902407





REC3902250

REC3902413



REC3902414

AM07



REC3902467



REC3902864



REC3902865



REC3902907



REC3903560



AM15

REC3902931



REC3905265



REC3908405

INTERFACE AM01CAN

Ref. AM01CAN
REC3903008



		CABLE WIRE CAVI CÂBLE
REC3902960	Marine VOLVO, MERCRUISER (gasolina | fuel | benzina | essence), MEFI-5 / EGC, ILMOR, CRUSADER, ILMOR, INDMAR, PCM (MEFI-5/ EGC UBD-Msocket)	AM16
REC3903502	Marine VOLVO, EGC-EV	AM18
REC3904778	Marine MERCURY, MARINER, CUMMINS 2010+, MANDOS MCM, SMARTCRAFT	AM25
REC3907103	Marine STEYR with CAN Line protocol	AM32
REC3907642	YANMAR MARINE CAN CABLE	AM33



REC3902960



REC39003502



REC39004778



REC3907103



REC3907642

KIT DIAGNOSIS Y REPROGRAMACIÓN DE LLAVE
CABLE KIT FOR DIAGNOSIS AND KEY REPROGRAMMING
KIT PER LA DIAGNOSI E RIPROGRAMMAZIONE DE CHIAVE
KIT DE DIAGNOSTIC ET REPROGRAMATION DE CLÉ

		CABLE WIRE CAVI CÂBLE
REC3906015	BRP Group	3151/AP43



PUNTAS DE DERIVACIÓN
REFERRAL POINTS
PUNTA DI DERIVAZIONE
PONTS DE DÉRIVATION

	CABLE WIRE CAVI CÂBLE
REC3904048	AM10



Puede utilizarse con interface AM01 o AM01CAN dependiendo de la marca.
It can be used with AM01 or AM01CAN interface depending on the brand.
Può essere utilizzato con l'interfaccia AM01 o AM01CAN in base alla marca.
Peut être utilisé avec l'interface AM01 ou AM01CAN selon la marque.

SOPORTES | STANDS | SUPPORTI | SUPPORTS

SOPORTES DESCARGA DE EMBARCACIONES

RECH10
Para cargar o descargar embarcaiones de los remolques o cuna.
Los remolques pueden entrar y salir de entre los gatos hidráulicos libremente, facilitando su tarea.
Levantan embarcaciones de hasta 18 toneladas.
Su recorrido de elevación es de 51 cm.
Equipado con válvula de bloqueo que permite mantener el barco indefinidamente en la posición deseada.
Puede actuar sobre tierra, grava, asfalto o cemento, tanto en la tienda, como en el varadero o exposición.

BOAT HANDLING JACKS & STANDS

RECH10
Work station for bottom repair & cleaning. Trailer rolls in out past jacks, allowing you to take boats on or off trailers easily.
Jacks have an auto lock allowing boats to be left on indefinitely.
Can be used on dirt, gravel, black top or cement.
Can be used anywhere! Shop, yard, showroom.
Lifts boats up to 40,000 lbs.

SUPPORTI SCARICO IMBARCAZIONI

RECH10
Per caricare o scaricare imbarcazioni da rimorchi o sostegni.
I rimorchi possono entrare e uscire tra i crik idraulici liberamente, facilitando il compito.
Solleva imbarcazioni fino a 18 tonnellate.
Escursione max di 51 cm.
Fornito di valvola di blocco che permette di mantenere la barca nella posizione desiderata per diverso tempi.
Può essere usato su terra, ghiaia, asfalto o cemento, come in negozio o in esposizione.

SUPPORTS DE DÉCHARGE DE BATEAU

RECH10
Pour charger ou décharger des bateaux de remorques ou de berceaux.
Les remorques peuvent entrer et sortir librement entre les vérins hydrauliques, ce qui facilite leur tâche.
Ils lèvent des navires jusqu'à 18 tonnes.
Sa course d'élévation est de 51 cm.
Equipé d'une valve de blocage qui permet au navire d'être maintenu indéfiniment dans la position souhaitée.
Il peut agir sur terre, gravier, asphalte ou ciment, aussi bien en magasin qu'en hangar à bateaux ou en exposition.

REF					
RECH10	Soportes hidráulicos	Jacks	Supporti idraulici	Supports hydrauliques	x 4
	Soportes	Straight arms	Supporti	Supports	x 4
	Soportes inclinados 25 cm	10" drop arms	Supporti inclinati 25 cm	Supports inclinés de 25 cm	x 4
	Soportes asiento barco	4" x 18" contact pads	Supporti appoggi barche	Supports de siège de bateau	x 4
RECH10-1/4	Soportes hidráulicos	Jacks	Supporti idraulici	Supports hydrauliques	1
	Soportes	Straight arms	Supporti	Supports	1
	Soportes inclinados 25 cm	10" drop arms	Supporti inclinati 25 cm	Supports inclinés de 25 cm	1
	Soportes asiento barco	4" x 18" contact pads	Supporti appoggi barche	Supports de siège de bateau	1

RECmar®





REF					KG	
REC12	Soporte inclinado (25,4 cm)	Drop arm (25,4 cm)	Supporti elevatori (25,4 cm)	Support incliné (25,4 cm)	1.125 kg	59,7 - 107,9 cm
REC15	Soporte recto	Straight arm	Supporti	Pied droit		83,8 - 132 cm
	1ª posición	1st Pin hole	1ª posizione	1ère position	900 kg	
	2ª posición	2nd Pin hole	2ª posizione	2ème position	1.800 kg	
	3ª posición	3rd Pin hole	3ª posizione	3e position	3.600 kg	
	4ª posición	4th Pin hole	4ª posizione	4ème position	4.500 kg	
REC16	Soporte elevador (12,7 cm)	Riser extension (12,7 cm)	Supporti elevatori (12,7 cm)	Support de levage (12,7 cm)	4.500 kg	96,5 - 144,8 cm
REC17	Soporte elevador (25,4 cm)	Riser extension (25,4 cm)	Supporti elevatori (25,4 cm)	Support de levage (25,4 cm)	4.500 kg	109,2 - 157,5 cm
REC18	Soporte estándar (10 x 45,7 cm)	Standard Pad 10 x 45,7 cm)	Supporti standard (10 x 5,7 cm)	Support standard (10 x 45,7 cm)		
REC19	Soporte plus (15,2 x 76,2 cm)	Pad Plus (15,2 x 76,2 cm)	Supporti Plus (15,2 x 76,2 cm)	Support plus (15,2 x 76,2 cm)	6.900 kg +	


REC12

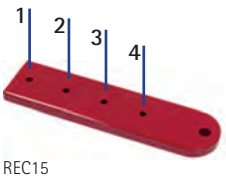

REC15


REC16
REC17


REC18
REC19

RECAMBIOS | SPARES | RICAMBIO | REMPLACEMENT

REF	RECmar®			
RECNSCYL	Pistón	Piston	Pistone	Vérin

REF	YARDARM			
YARSLKTN	Kit reparación	Repair kit	Kit riparazione	Kit de réparation
YARJAT	Rueda	Wheel	Ruota	Roue
YARNSTVALVE	Llave de recambio	Spare T key	Chiave di ricambio	Clé de rechange


YARSLKTN


RECNSCYL


YARJAT


YARNSTVALVE

RECAMBIOS MARINOS

SOPORTES PARA EMBARCACIONES | BOAT STANDS | SUPPORTI PER IMBARCAZIONI | BERS ROULANT POUR BATEAU

RECmar®

REF	KG
RECED36	1.500 kg

REF
RECED36C

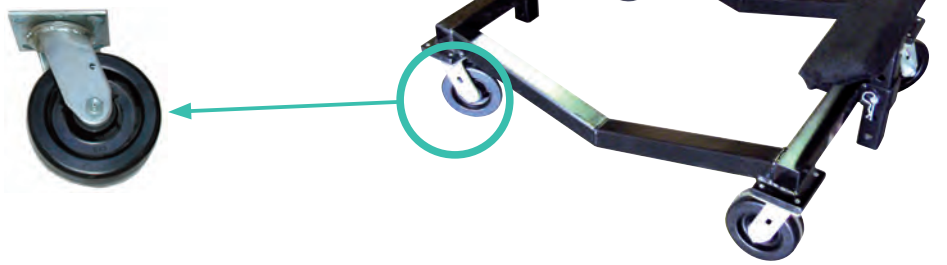

SOPORTES PARA COLAS | STANDS FOR STERN DRIVES | SUPPORTI PER PIEDI | SUPPORTS D'EMBASES

RECJO6HD
Carro con gato hidráulico para la instalación de todo tipo de colas.
Permite desmontar o montar colas, una sola persona.
Especialmente útil en embarcaciones con plataforma integrada.
Construido con brazos extra largos de sujección y base con 4 ruedas neumáticas.
Gran capacidad de elevación para colas de peso extra.
También en colas de doble hélice.
Varias regulaciones.

RECJO6HD
Stern drive installer.
Works in all makes and models. Allows one man to remove and install stern drives.
Especially helpful on boats with integrated swim platforms.
Built with extra long clamping arms and wheel base, plus heavyduty lifting capacity for those extra heavy drives.
Also works great on dual prop drives.
Unique low cost shop tool.
4 air tires allow for rugged yard use.,

RECJO6HD
Carro con crik idraulico per l'installazione di tutti i tipi di piedi.
Permette ad una persona di smontare o montare i piedi da solo.
Specialmente utile nelle imbarcazioni con piattaforma integrata.
Costruito con larghi bracci di fissaggio e una base con 4 ruote pneumatiche.
Grande capacità di sollevamento per piedi con peso extra.
Anche per piedi con doppia elica. Varie regolazioni.

RECJO6HD
Chariot avec vérin hydraulique pour l'installation de tous types d'embase.
Il permet à une seule personne de démonter ou de monter des pieds.
Particulièrement utile dans les bateaux avec plate-forme intégrée.
Construit avec des bras de support extra longs et une base avec 4 roues pneumatiques.
Grande capacité de levage pour des embases de poids important.
Également en arbre double hélice.

REF
RECJO6HD

RECmar®



RECAMBIOS | SPARES | RICAMBIO | REMPLACEMENT

REF				
RECKOCYL	Pistón	Piston	Pistone	Vérin
RECKRW	Rueda completa	Hydraulic jack RE-Wheel	Ruota completa	Roue complète
RECKFW	Rueda hidráulica	Hydraulic jack FT-Wheel	Ruota idraulica	Roue
RECJO10	Suplemento 25 cm	Suplement 10"	Supplemento 25 cm	Supplément de 25 cm
RECHANDLEJO6HD	Maneta	Handle	Maniglia	Poignée
RECSPRINGJO6HD	Muelle	Spring	Molla	Ressort



RECKOCYL



RECJO10



RECKRW RECKFW



RECHANDLEJO6HD

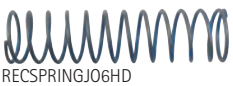

RECSPRINGJO6HD

RECAMBIOS MARINOS

YARSR5
Soporte para 5 colas.
Mantiene el taller limpio y organizado.
Protege las colas de golpes y daños.

YARSR5
Holds 5 stern drives.
Keeps shop looking neat and clean.
Protects drives from being cratched and damaged.

YARSR5
Supporto per 5 piedi.
Mantiene l'officina pulita e organizzata.
Protegge i piedi dai colpi e dai danni.

YARSR5
Prise en charge de 5 embases.
Maintient l'atelier propre et organisé.
Protège les pieds d'embase des chocs et des dommages.

REF
YARSR5

YARDARM

REF
YARSRC





RECWS3
Soporte trabajo reparación todo tipo de colas.

RECWS3
Work station.
Holds all kind of drives.

RECWS3
Supporto lavoro per riparare tutti i tipi di piedi.

RECWS3
Support pour les travaux de réparation de tous types d'embase.

REF
RECWS3

RECmar®



SOPORTES PARA MOTORES

Soporte de trabajo giratorio 360º con ruedas. Para todo tipo de motores; GM, FORD, VOLVO.
Ideal para reparaciones completas..

STANDS FOR ENGINES

Allow engine to be rotated 320º.
Adjustable mounting plate will accommodate all engine types.

SUPPORTI PER MOTORI

Carrello supporto motore, permette il movimento per 360º utile per lavorazioni in coppa.
Fornito di ruote piene, può montare tutti i blocchi GM, FORD, VOLVO.

SUPPORTS MOTEUR

Support de travail rotatif à 360 ° avec roues. Pour tous types de moteurs; GM, FORD, VOLVO.

REF
RECTOOL1

RECmar®





YARES2
Soporte trabajo giratorio 360º con ruedas. Para todo tipo de motores; GM, FORD, VOLVO.
Ideal para reparaciones completas.
Se le pueden adaptar los soportes referencias YARCHA para GM y YARFHA para FORD y probar motores en funcionamiento.

YARES2
360º rotating work support with wheels. For all types of engines; GM, FORD, VOLVO.
Ideal for complete repairs. You can adapt the YARCHA reference supports for GM and YARFHA for FORD and test running engines.

YARES2
Supporto lavoro girevole 360º con ruote.
Per tutti i tipi di motori; GM, FORD, VOLVO.
Ideale per riparazioni complete.
Si possono adattare i supporti di riferimento YARCHA per GM e YARFHA per FORD e provare i motori in funzione.

YARES2
Support de travail rotatif à 360 ° avec roues. Pour tous types de moteurs; GM, FORD, VOLVO.
Idéal pour des réparations complètes.
Vous pouvez adapter les supports de référence YARCHA pour GM et YARFHA pour FORD et tester les moteurs en cours d'exécution.

REF	
YARES2	GM, FORD, VOLVO
YARFHA	Kit FORD
YARCHA	Kit GM

YARDARM





YARFHA YARCHA



CARROS PORTAMOTOR — OUTBOARD MOTOR CARRIER — CARRELLO PORTA MOTORE — CHARIOT MOTEUR

Soporte portamotor con ruedas, para fueraborda. Con soporte para depósito de combustible y sandow de fijación.
Fabricado en acero zincado y tablero marino de 43 cm.
Diámetro ruedas: 15 cm

Manufactured in galvanized steel pipe and wooden board 43 cm. With tank holder and fixing strap.
Diameter wheels: 15 cm.

Supporto porta motore con ruote, per fuoribordo. Con supporto per serbatoio carbutante. In acciaio zincato e bordo marino da 43 cm.
Diametro ruote: 15 cm

Chariot-moteur avec roues, pour hors-bord. Avec support pour réservoir de carburant et fixation sandow.
Fabriqué en acier galvanisé et planche marine de 43 cm.
Diamètre de roue: 15 cm



Ref	KG	KG	
GS73122	12 kg	50 kg	90 cm

GOLDENSHIP

Soporte portamotor con ruedas, para fueraborda. Con soporte para depósito de combustible y sandow de fijación.
Fabricado en acero zincado y tablero marino de 45 cm.
Diámetro ruedas: 36 cm

Manufactured in galvanized steel pipe and wooden board 45 cm. With tank holder and fixing strap.
Diameter wheels: 36 cm.

Supporto porta motore con ruote, per fuoribordo. Con supporto per serbatoio carbutante. In acciaio zincato e bordo marino da 45 cm.
Diametro ruote: 36 cm

Chariot-moteur avec roues, pour hors-bord. Avec support pour réservoir de carburant et fixation sandow.
Fabriqué en acier galvanisé et panneau marin de 45 cm.
Diamètre de roue: 36 cm



Ref	KG	KG	
GS73119	12 kg	80 kg	95 cm

GOLDENSHIP

SOPORTE EXPOSITOR — OUTBOARD STAND — SUPPORTO ESPOSITORE — PRÉSENTOIR

Soporte portamotor con ruedas, para fueraborda. Plegable. Fabricado en acero zincado y tablero marino de 43 cm.

Folding display for outboards. Manufactured in galvanized steel pipe and wooden board of 43 cm.

Supporto per motori fuoribordo. Pieghevole. In acciaio zincato e bordo marino da 43 cm.

Chariot-moteur sans roues, pour hors-bord. Pliable. Fabriqué en acier galvanisé et planche marine de 43 cm.



Ref	KG	KG	
GS73120	6 kg	40 kg	90 cm

GOLDENSHIP

RECAMBIOS MARINOS

DIRECCIÓN MECÁNICA | STEERING SYSTEM | TIMONERIA MECCANICA | DIRECTION MÉCANIQUE

CAJA DE DIRECCIÓN AJUSTABLE ZTS | ZTS ROTARY SINGLE HELM | TIMONERIA ZTS | BOÎTIER DE DIRECTION ZTS

Con mecanismo antiretorno.
Elimina el «feedback» de la hélice.
Nº vueltas babor-estribor: 3,8.
Para utilizar con cables **3000 SS.**
Reemplaza **Teleflex-Morse® NFB Safe-T II, NFB 4.2, T73BRFC**

Zero torque steering rotary helm.
Eliminates prop feedback load.
Precise response of 3.8 turns lock-to-lock.
For use with the steering cables **3000 SS.**
Replaces **Teleflex-Morse® NFB Safe-T II, NFB 4.2, T73BRFC**

Timoneria con meccanismo anti-ritorno.
Elimina il feedback delle eliche.
N° giri destra e sinistra: 3,8.
Da utilizzare con cavi: 3000 SS.
Rimpiazza **TeleflexMorse®NFB Safe-T II, NFB 4.2, T73BRFC**

Avec mécanisme anti-retour.
Élimine le "retour" de l'hélice.
Nombre de tours bâbord-tribord: 3.8.
Utilisation avec les câbles 3000 SS.
Remplace Teleflex-Morse® NFB Safe-T II, NFB 4.2, T73BRFC

REF				
PRE500010	Caja de dirección	Helm	Timoneria	Boitier de direction
PRE500012	Ménsula de montaje 90º	Bezel kit 90º	Coprimozzo 90°	Support incliné 90º
PRE500014	Ménsula de montaje 20º	Bezel kit 20º	Coprimozzo 20°	Support incliné 20º

PRETECH Cable and Controls



PRE500012





PRE500014



PRE500010

Caja de dirección con sistema de ángulo ajustable hasta 40º.
Se acomoda la postura de conducción más idónea para el piloto.

Tilt rotary steering system to use with the steering cables 3000 SS.
With full 40 degree range of motion.

Timoneria con sistema di angolo fino a 40°.
Si può impostare la posizione più idonea di guida per il pilota.

Boîtier de direction avec système d'angle réglable jusqu'à 40º.
Permet d'obtenir la position de conduite la plus appropriée pour le pilote.

REF	
PRE500007	ZTS
PRE370987	3000

PRETECH Cable and Controls



PRE500007



PRE370987

KIT LT | KIT LT | KIT LT | KIT LT

Compuesto por 1 caja operadora, 1 cable de dirección según las medidas indicadas y un bisel de montaje de 90º.
Radio mínimo curvatura del cable 360º.
Carrera del cable 230 mm con 2,5 vueltas de volante

Rotary steering system: Helm, Steering cable and 90º bezel.
2,5 turns lock to lock. Travel 230 mm.

Composto da una timoneria, 1 cavo timoneria secondo le dimensioni indicate e una piastra da 90°.
Raggio minimo curvatura del cavo 360°.
Corsa cavo 230mm con 2,5 giri del volante.

Composé d'un boîtier de commande, d'un câble de direction selon les mesures indiquées et d'un support incliné à 90º.
Course du câble 230 mm avec 2,5 tours de volant

REF			
PRE208005	5'/ 1,50 m	5,5 m	55 hp
PRE208006	6'/ 1,80 m		
PRE208007	7'/ 2,10 m		
PRE208008	8'/ 2,45 m		
PRE208009	9'/ 2,75 m		
PRE208010	10'/ 3,05 m		

REF			
PRE208011	11'/ 3,35 m	5,5 m	55 hp
PRE208012	12'/ 3,65 m		
PRE208013	13'/ 3,95 m		
PRE208014	14'/ 4,25 m		
PRE208015	15'/ 4,60 m		
PRE208016	16'/ 4,90 m		

PRETECH Cable and Controls steerflex



KIT 3000 SS

Compuesto por 1 caja operadora, 1 cable de dirección fabricado en acero inox según medidas indicadas y un bisel de montaje de 90º.
Para embarcaciones con un esfuerzo máximo de 140 kg en el punto de unión.
Puede montarse en cualquier posición con movimientos de 90º.
Radio mínimo curvatura del cable 200 mm. Carrera del cable 230 mm con 3,6 vueltas de volante
Reemplaza Teleflex-Morse® Safe-T QC, Safe-T, Uflex T71FC

REF		
PRE315008	8' / 2,45 m	
PRE315009	9' / 2,75 m	
PRE315010	10' / 3,05 m	
PRE315011	11' / 3,35 m	8 m
PRE315012	12' / 3,65 m	
PRE315013	13' / 3,95 m	
PRE315014	14' / 4,25 m	

REF		
PRE315015	15' / 4,60 m	
PRE315016	16' / 4,90 m	
PRE315017	17' / 5,20 m	8 m
PRE315018	18' / 5,50 m	
PRE315019	19' / 5,80 m	
PRE315020	20' / 6,10 m	

KIT 3000 SS

Rotary steering system: Helm, Stainless Steel Cable and 90º Bezel.
Stainless steel inner cable with spring stainless steel enclosure coil.
Maximun working load: 300 lb at the tiller arm.
Three turns lock to lock. Travel 230 mm.
Replaces Teleflex-Morse® Safe-T QC, Safe-T, Uflex T71FC

KIT 3000 SS

Composto da una timoneria, 1 cavo timoneria in acciaio inox, secondo le misure richieste e una piastra di montaggio di 90°.
Per imbarcazioni con uno sforzo massimo di 140kg nel punto di unione.
Si può montare in qualunque posizione con un movimento di 90°. Raggio minimo curvatura 200mm.
Corsa del cavo 230mm con 3,6 giri del volante.
Rimpiazza **Teleflex-Morse® Safe-T QC, Safe-T, Uflex T71FC**

KIT 3000 SS

Composé de 1 boîtier de commande, 1 câble de direction en acier inoxydable selon les mesures indiquées et un support incliné à 90º.
Pour les bateaux avec un effort maximum de 140 kg au point de jonction.
Course du câbles 230 mm avec 3,6 tours de volant
Remplace **Teleflex-Morse® Safe-T QC, Safe-T, Uflex T71FC**



CABLES DE DIRECCIÓN LT

REF	
PRE250005	5'/ 1,50 m
PRE250006	6'/ 1,80 m
PRE250007	7'/ 2,10 m
PRE250008	8'/ 2,45 m
PRE250009	9'/ 2,75 m
PRE250010	10'/ 3,05 m

LT STEERING CABLE

REF	
PRE250011	11'/ 3,35 m
PRE250012	12'/ 3,65 m
PRE250013	13'/ 3,95 m
PRE250014	14'/ 4,25 m
PRE250015	15'/ 4,60 m
PRE250016	16'/ 4,90 m

CAVO DI TIMONERIA LT

CÂBLES DE DIRECTION LT



CABLES DE DIRECCIÓN 3000 SS DE ACERO INOX

REF	
PRE550008	8'/ 2,45 m
PRE550009	9'/ 2,75 m
PRE550010	10'/ 3,05 m
PRE550011	11'/ 3,35 m
PRE550012	12'/ 3,65 m
PRE550013	13'/ 3,95 m
PRE550014	14'/ 4,25 m
PRE550015	15'/ 4,60 m
PRE550016	16'/ 4,90 m
PRE550017	17' / 5,20 m

STEERING CABLE 3000 SS STAINLESS STEEL

REF	
PRE550018	18' / 5,50 m
PRE550019	19' / 5,80 m
PRE550020	20' / 6,10 m
PRE550021	21' / 6,40 m
PRE550022	22' / 6,70 m
PRE550023	23' / 7,00 m
PRE550024	24' / 7,30 m
PRE550025	25' / 7,60 m
PRE550026	26' / 7,90 m

CAVO TIMONERIA 3000 SS ACCIAIO INOX

CÂBLES DE DIRECTION 3000 SS ACIER INOXYDABLE



CABLES DE DIRECCIÓN MEGA-UR

Reemplaza | Replace | Rimpiazzano | Remplace:
Ultraflex T71FC, T72FC, T73NR FC, T81FC, T82FC, T83NR FC.
Teleflex Safe-T QC, NFB 4.2, NFB Safe-T II

REF	
PRE509007	7'/ 2,14 m
PRE509008	8'/ 2,45 m
PRE509009	9'/ 2,75 m
PRE509010	10'/ 3,05 m
PRE509011	11'/ 3,35 m
PRE509012	12'/ 3,65 m
PRE509013	13'/ 3,95 m

REF	
PRE509014	14'/ 4,25 m
PRE509015	15'/ 4,60 m
PRE509016	16'/ 4,90 m
PRE509017	17' / 5,20 m
PRE509018	18' / 5,50 m
PRE509019	19' / 5,80 m
PRE509020	20' / 6,10 m

MEGA-UR STEERING CABLE

CAVO TIMONERIA MEGA-UR

CÂBLES DE DIRECTION MEGA-UR



ACCESORIOS DIRECCIÓN MECÁNICA | ACCESSORIES FOR STEERING SYSTEM | ACCESSORI PER TIMONERIA MECCANICA | ACCESSOIRES POUR DIRECTION MÉCANIQUE

REF					
PRE370618	Cardan de unión del cable de dirección al motor.	Swivel joint for steering cables.	Per unire cavi timoneria al motore.	Union cardan du câble de direction au moteur.	1
PRE370046	Soporte para cable de dirección. Para montaje en el espejo de popa	Bracket kit for inboard transom steering mount.	Supporto per cavi timoneria. Per il montaggio nello specchio di poppa.	Support pour câble de direction. Pour montage sur le tableau AR	1
PRE370613	Soporte para cable de dirección. Para montaje estanco en los laterales de la embarcación. Regulable.	Bracket kit for inboard side splashwell steering mount.	Suppporto per cavi timoneria. Montaggio della flangia ai lati dell'imbarcazione. Regolabile.	Support pour câble de direction. Pour un montage étanche sur les côtés du bateau. Réglable.	1
PRE370619	Rótula para unión rápida del cable de dirección al motor.	Ball joint for steering cables.	Giunto per unire i cavi timoneria al motore.	Rotule pour une connexion rapide du câble de direction au moteur.	1
PRE370621	Barra de reenvío para conexión de los cables de dirección. Fabricada en acero inox. Reforzada.	Link arm for outboards steerings.	Barra di direzione per collegare i cavi. In acciaio inox. Rinforzata.	Barre de renvoie pour connecter les câbles de direction. Fabriqué en acier inoxydable. Renforcé	1


PRE370618

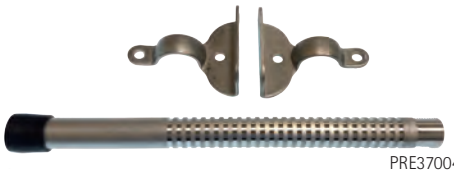
PRE370046

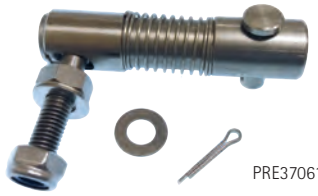
PRE370619


PRE370613


PRE370621

DIRECCIÓN HIDRÁULICA | HYDRAULICS STEERING SYSTEM | TIMONERIA IDRAULICA | DIRECTION HYDRAULIQUE

FUERABORDAS 150 HP | OUTBOARDS 150 HP | FUORIBORDO 150 HP | HORS-BORD 150 HP

Bomba de aluminio, con válvula antiretorno incorporada. Cilindro de aluminio y acero inox. con purgadores. Se suministra completa con racors, tubo flexible de rilsan y 2L de aceite hidráulico

Helm pump made in aluminum, with non-return valve incorporated. Cylinder in aluminum and stainless steel, with breather valves. Completed with racors, rilsan tubing and 2L hydraulic oil.

Corpo pompa in alluminio, con valvola anti-ritorno incorporata. Cilindro in alluminio e acciaio inox, con spurgo. Si vende completa di raccordi, tubo flessibile e 2 l di olio idraulico.

Pompe en aluminium, avec clapet anti-retour intégré. Vérin en aluminium et acier inoxydable. Livré complet avec raccords, tube flexible et 2L d'huile hydraulique

				TX4200K 150 HP	TX6400K 300 HP
Modelo bomba	Pump model	Modello pompa	Modèle de pompe	BayStar	SeaStar
Capacidad bomba	helm volume	Cap. Pompa	Capacité de la pompe	23 cm^3	27,8 cm^3
Modelo cilindro	Cylinder model	Mod. Cilindro	Modèle de vérin	HC4645H	HC5345H
Capacidad cilindro	Cylinder volume	Cap. Cilindro	Cylindrée	105 cm^3	139 cm^3
Carrera del pistón	Cylinder travel	Corsa pistone	Course du vérin	206 mm	206 mm
Nº vueltas babor-estribor	Turns lock to lock	N° giri a destra e sinistra	No. tourne bâbord-tribord	5	5
Manguera con racors	Hose with racors	Tubo con raccordo	Tuyau avec raccords	2 x 6 m	2 x 7 m
Velocidad máxima	Max. speed	Velocità max	Vitesse maximale	50 kn	65 kn

BayStar
TX4200K



SeaStar
TX6400K



TUBOS HIDRÁULICOS PARA TX6400K

2 Tubos con racors montados

REF		
TXMP5126	26' / 8 m	2

SeaStar

HYDRAULIC HOSES FOR TX6400K

Pair of hydraulic hoses with racors

TUBI IDRAULICI PER TX6400K

2 tubi con raccordi montati

TUYAUX HYDRAULIQUES POUR TX6400K

2 tuyaux avec raccords montés



KITS

Bomba de aluminio, con vávula antiretorno y sobrepresión. Cilindro de aluminio y acero inoxidable, con purgadores. Se suministra completa con racors de latón cromado, tubo flexible de rilsan y aceite hidráulico.

KIT

Helm pump made in aluminum, with a non-return and pressure relief valves. Cylinder in aluminum and stainless steel, with breather valves. Completed with racors, rilsan tubing and hydraulic oil.

KITS

Corpo pompa in alluminio con valvola anti-ritorno e sovrapressione. Cilindro in alluminio e acciaio inox, con spurgo. Si vende completa di raccordi in ottone cromato, tubo flessibile e olio idraulico.

KITS

Pompe en aluminium, avec soupape de refoulement et de surpression. Vérin en aluminium et acier inoxydable. Livré complet avec raccords en laiton chromé, tuyau flexible et huile hydraulique.

				GS41062 80 hp	GS41065 150 hp	GS41066 300 hp	GS41059 350 hp
Modelo bomba	Pump model	Modello pompa	Modèle de pompe	GM3-MRA	GM0-MRA	GM2-MRA01	GM2-MRA01
Capacidad bomba	helm volume	Cap. Pompa	Capacité de la pompe	14 cm^3	17 cm^3	27 cm^3	27 cm^3
Modelo cilindro	Cylinder model	Mod. Cilindro	Modèle de vérin	MC90B	MC150BR	MC300A	MC350A
Capacidad cilindro	Cylinder volume	Cap. Cilindro	Cylindrée	75 cm^3	83 cm^3	130 cm^3	140 cm^3
Carrera del pistón	Cylinder travel	Corsa pistone	Course du vérin	206 mm	200 mm	198 mm	198 mm
Nº vueltas babor-estribor	Turns lock to lock	N° giri destra e sinistra	No. tours bâbord-tribord	5,2	4,9	4,9	5,2
Manguera con racors	Hose with racors	Tubo con raccordo	Tuyau avec raccords	2 x 5 m	2 x 6 m	2 x 7 m	2 x 7,5 m
Ø Tubo	Tube Ø	Ø Tubo	Ø Tuyau	6,3 mm = 1/4"	6,3 mm = 1/4"	7,94 mm = 5/16"	7,94 mm = 5/16"

GS41062



GS41065



GS41066



GS41059



KITS DIRECCIÓN HIDRÁULICA PARA COLAS

Bomba de aluminio estampado en caliente.
Eje de acero inox AISI 316.
Rotor a 7 pistones fabricado en acero.
Cilindro de aluminio y acero inox.
Se suministra completa con racors, 2 x 7,5 m tubo flexible de rilsan y 2 L de aceite hidráulico.

HYDRAULIC STEERING FOR STERN-DRIVE KITS

Helm pump made in aluminum with hot pressing processing (not casting).
Shaft made of stainless steel AISI 316.
7 pistons rotor made in steel.
Cylinder in aluminum and stainless steel, with breather valves.
Completed with racors, rilsan tubing and 2 L hydraulic oil.

KIT TIMONERIA IDRAULICA PER PIEDI

Corpo pompa in alluminio con stampaggio a fusione.
Asse in acciaio inox AISI316.
Cilindro a 7 pistoni fabbricato in acciaio.
Cilindro in alluminio e acciaio inox.
Si vende completo di raccordi, 2x7,5 m di tubo flessibile e 2 l di olio idraulico.

DIRECTION HYDRAULIQUE POUR EMBASE

Pompe en aluminium estampé à chaud.
Arbre en acier inoxydable AISI 316.
Rotor à 7 pistons en acier.
Vérin en aluminium et acier inoxydable.
Livré complet avec raccords, 2 tuyaux flexibles de 7,5 m et 2 litres d'huile hydraulique.

SERVO-ASISTIDA	POWER ASSISTED	SERVOASSISTITO	ASSISTÉE	GS41053
Denominación	Model	Modello	Dénomination	GF150ET
Modelo bomba	Pump model	Modello pompa	Modèle de pompe	GM2-MRA01
Capacidad bomba	helm volume	Cap. pompa	Capacité de la pompe	27 cm^3
Modelo cilindro	Cylinder model	Mod. cilindro	Modèle de vérin	MC150
Capacidad cilindro	Cylinder volume	Cap. pompa	Cylindrée	88cm^3
Carrera del pistón	Cylinder travel	Corsa pistone	Course du vérin	200 mm
Peso bomba	Helm weight	Peso pompa	Poids de la pompe	3 kg
Nº vueltas babor-estribor	Turns lock to lock	N° giri destra e sinistra	No. tours bâbord-tribord	3,4
Ø Tubo	Tube Ø	Ø Tubo	Ø Tuyau	7,94 mm / 5/16"
Longitud tubo	Tube length	Lungh. tubo	Longueur tuyau	2 x 7,5 m



SIN SERVO	NON POWER ASSISTED	SERVOASSISTITO	ASSISTÉE	GS41054
Denominación	Model	Modello	Dénomination	GF300BET
Modelo bomba	Pump model	Modello pompa	Modèle de pompe	GM2-MRA03
Capacidad bomba	helm volume	Cap. pompa	Capacité de la pompe	32 cm^3
Modelo cilindro	Cylinder model	Mod. cilindro	Modèle de vérin	MC300BET
Capacidad cilindro	Cylinder volume	Cap. cilindro	Cylindrée	146 cm^3
Carrera del pistón	Cylinder travel	Corsa pistone	Course du vérin	200 mm
Peso bomba	Helm weight	Peso pompa	Poids de la pompe	3,7 kg
Nº vueltas babor-estribor	Turns lock to lock	N° giri destra e sinistra	No. tours bâbord-tribord	4,6
Ø Tubo	Tube Ø	Ø Tubo	Ø Tuyau	7,94 mm / 5/16"
Longitud tubo	Tube length	Lungh. tubo	Longueur tuyau	2 x 7,5 m



ACCESORIOS DIRECCIÓN HIDRÁULICA

ACCESSORIES FOR HYDRAULIC STEERING SYSTEM

ACCESSORI PER TIMONERIA IDRAULICA

ACCESSOIRES POUR DIRECTION HYDRAULIQUE

REF	RO OEM					(mm)
GS41080		Barra de dirección para conexión de los cables de dirección. Acero inox.	Link arm for outboards steerings. Stainless steel.	Barra di rinvio per la connessione dei cavi timoneria. Fabbricata in accaio inox.	Barre de renvoie pour connecter les câbles de direction. Acier inoxidable.	320 - 340
GS41082		Barra de dirección con conexión rápida para conexión de los cables de dirección. Acero inox.	Link arm quick connection for outboards steerings. Stainless steel.	Barra di rinvio con connessione rapida per la connessione dei cavi timoneria. Fabbricata in accaio inox.	Barre de renvoie avec connexion rapide pour connecter les câbles de direction. Acier inoxidable.	330 - 370
GS41083		Barra de unión para el acople de dos motores	Universal tie bar for two engines	Barra di unione per accoppiamento di due motori.	Barre d'accouplement pour deux moteurs	850
GS41084	6E5-61301-01 6E5-61301-00	Barra de unión con conexión a rótula pPara el acople de dos motores fueraborda hasta 300 hp. Acero inox. Aisi 316.	Universal tie bar with spherical joint for two engines up to 300 hp. Made in stainless steel.	Barra di unione con snofo sferico per due motori fuoribordo fino a 300hp. In acciaio inox aisi316	Kit barre d'accouplement à rotule pour deux moteurs hors-bord jusqu'à 300 ch. Acier inoxidable. Aisi 316.	640 - 780



GS41080

GOLDENSHIP



GS41082

GOLDENSHIP



MAVI MARE GS41083



GS41084

GOLDENSHIP

BOMBA

PUMP

POMPA

POMPE

REF	R.O. OEM
GS41070	GM3-MRA
GS41071	GM0-MRA
GS41072	GM2-MRA01
GS41073	GM2-MRA03



MAVI MARE

RECAMBIOS MARINOS

CILINDRO — CYLINDER — CILINDRO — VERIN

REF	R.O. OEM
GS41077	MC350HD
GS41060	MC90B
GS41063	MC150BR
GS41089	MC300A

MAVI MARE



CONECTORES — CONNECTORS — PIASTRA CONNESSIONE — CONNECTEURS

REF		
GS41067	Honda 115-130	1
GS41068	Yamaha 40-50-60-70 HP Honda 115-130 HP	1
GS41069	Mercury Optimax 115 Mercury 150 EFI	1

GOLDENSHIP



GS41067

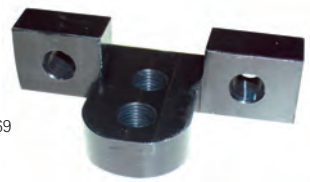

GS41069



GS41068

ACEITE PARA DIRECCIÓN HIDRÁULICA — OIL FOR HYDRAULIC STEERING SYSTEM — OLIO PER TIMONERIA IDRAULICA — HUILE POUR DIRECTION HYDRAULIQUE

REF	
GS41074	1 L



MANDOS UNIVERSALES Y ACCESORIOS — UNIVERSAL CONTROLS AND ACCESSORIES — CONTROLLI UNIVERSALI E ACCESSORI — COMMANDES UNIVERSELLES ET ACCESSOIRES

MANDO ELECTRÓNICO

Reemplaza y mejora el funcionamiento de los mandos mecánicos tradicionales, permitiendo un control más preciso y suave de las maniobras.
Se suministran en kits completos con todos los componentes para sustituir de modo sencillo los mandos tradicionales, listos para instalar y operar.
Sistema de conexión CANbus.
Alimentación estandard 12V (24V Bajo demanda).

- Hasta 6 puestos de control.
- Sincronización de r.p.m. en ambos motores.
- Posibilidad de aumentar y reducir las revoluciones del motor mediante ligeras pulsaciones de los botones de control.
- Puede incorporar mandos de control remoto mediante conexión «CANbus».
- Memoria de diagnósticos de avisos y alarmas.

GLENDINNING

ELECTRONIC CONTROL

Easily upgrade the traditional boat mechanical controls.
Gives finger tip, precise control of your engines shift and throttle functions. Supplied in complete kits with all components required and ready to install.
Latest CANbus technology for easy installation and set up.
12V Standard power (24V on demand).

- Can be connected up to 6 control heads.
- Auto synchronization r.p.m.
- Possibility of throttle in «BUMP» mode.
- Can incorporate Handheld Remote Controls.
- Memory of diagostics checks of warning and alarms.



SCATOLA DI COMANDO

Sostituisce e migliora la scatola di comando tradizionale, permettendo un controllo più preciso delle manovre.
Si vende in kit completo con tutti i componenti richiesti per sostituire in modo semplice la scatola di comando tradizionale.
Tecnologia CANbus,
Alimentazione standard **12V** (24V on demand).

- Fino a 6 postazioni di controllo
- Auto sincronizzazione r.p.m.
- Possibilità di diminuire e aumentare i giri del motore, tramite un pulsante di controllo.
- Si può incorporare comandi di controllo remoto tramite la connessione CANbus
- Memoria diagnostica di avviso e allarme.

COMMANDE ÉLECTRONIQUE

Elle remplace et améliore le fonctionnement des commandes mécaniques traditionnelles, permettant un contrôle plus précis et plus fluide des manœuvres.
Ils sont fournis en kits complets avec tous les composants pour remplacer facilement les commandes traditionnelles, prêts à installer et à utiliser.
Système de connexion CANbus.
Alimentation standard 12V (24V sur demande).

- Jusqu'à 6 points de contrôle peuvent être connectés.
- Synchronisation de r.p.m. dans les deux moteurs.
- Possibilité d'augmenter et de réduire les tours du moteur en appuyant légèrement sur les boutons de commande.
- Vous pouvez intégrer des commandes de télécommande via une connexion «CANbus».
- Mémoire de diagnostic des avertissements et alarmes.

KITS	KITS	KIT	KITS	
1 MOTOR INTERIOR 1 ESTACIÓN	**1 INBOARD ENGINE 1 STATION**	**1 MOTORE ENTROBORDO 1 STAZIONE**	**1 MOTEUR IN-BORD 1 STATION**	**GLE1M1EI**
Actuador SA2	Actuator SA2	1 attuatore SA2	Actionneur SA2	1
Mando 1 palanca - 2 pulsadores	Single Control Head - 2-buttons	Telecomando 1 leva - 2 pulsanti	1 commande à levier - 2 boutons	1
Cable comunicación mando-actuador 12 m	Station comm. cable 40ft.	Cavo comunicazione comando-attuatore 12m	Câble de communication commande-actionneur 12 m	1
Resistencia terminal BUS	Terminating resistor	Resistenza terminale BUS	Résistance de borne BUS	2
Cable alimentación DC - actuador 9 m.	Harness DC power-actuator 30ft.	Cavo alimentazione DC- attuatore 9m	Câble d'alimentation CC - actionneur 9 m.	1
Cable Start Interlock 9 m	Harness Start Interlock 30ft	Cablaggio start e blocco 9m	Câble de verrouillage de démarrage 9 m	1
Cable encendido «jumper»	Harness Ignition enable jumper	Cablaggio accensione	Câble d'allumage de cavalier	1
Cable encendido 9 m	Harness Ignition 40ft.	Cablaggio accensione	Câble sur 9 m	1
KIT 2ª ESTACIÓN 1 MOTOR INTERIOR	**KIT 2ND STATION 1 ENGINE INBOARD**	**KIT 2° STAZIONE 1MOTORE ENTROBORDO**	**KIT DE 2E STATION 1 MOTEUR IN-BORD**	**GLE1M2EI**
Mando 1 palanca - 2 pulsadores	Single Control Head - 2-buttons	Telecomando- 1 leva- 2 pulsanti	1 commande à levier - 2 boutons	1
Cable comunicación mando-actuador 12 m	Station comm. cable 40ft.	Cavo cablaggio comando-attuatore 12m.	Câble de communication commande-actionneur 12 m	1

GLENDINNING



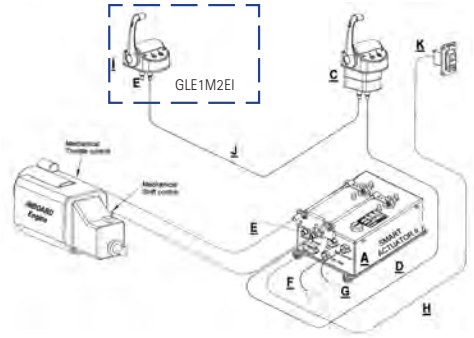

2 MOTORES INTERIORES 1 ESTACIÓN	2 INBOARD ENGINES 1 STATION	2 MOTORI ENTROBORDO 1 STAZIONE	2 MOTEURS IN-BORD 1 STATION	GLE2M1EI
Actuador SA2	Actuator SA2	Attuatore SA2	Actionneur SA2	2
Mando 2 palanca - 2 pulsadores	Twin Control Head - 2-buttons	Telecomando 2 leve- 2 pulsanti	2 commandes à levier - 2 boutons poussoirs	1
Cable comunicación mando-actuador 12 m	Station comm. cable 40ft.	Cavo cablaggio comando-attuatore 12m	Câble de communication commande-actionneur 12 m	1
Cable comunicación actuador-actuador 6 m	Station comm. cable 20ft.	Cavo cablaggio comando-attuatore 6m	Câble de communication actionneur-actionneur 6 m	1
Resistencia terminal BUS	Terminating resistor	Resistenza terminale BUS	Résistance de borne BUS	2
Cable alimentación DC - actuador 9 m.	Harness DC power-actuator 30ft.	Cavo alimentazione BUS-attuatore 9m	Câble d'alimentation CC - actionneur 9 m.	2
Cable Start Interlock 9 m	Harness Start Interlock 30ft	Cablaggio start e blocco 9m	Câble de verrouillage de démarrage 9 m	2
Cable encendido «jumper»	Harness Ignition enable jumper	Cablaggio accensione	Câble d'allumage de cavalier	1
Cable actuador sensor tacómetro	Harness Act. enable tach sender.	Cavo attuatore sensore tachimetro	Câble d'actionneur de capteur de tachymètre	1
Cable encendido 12 m	Harness Ignition 40ft.	Cavo accensione 12m	Câble sur 12 m	1
KIT 2ª ESTACIÓN 2 MOTORES INTERIOR	**KIT 2ND STATION 2 ENGINE INBOARD**	**KIT 2° STAZIONE 2 MOTORI ENTROBORDO**	**KIT DE 2E STATION 2 MOTEURS IN-BORD**	**GLE2M2EI**
Mando 2 palanca - 2 pulsadores	Twin Control Head - 2-buttons	Telecomando 2 leve-2 pulsanti	2 commandes à levier - 2 boutons poussoirs	1
Cable comunicación mando-actuador 12 m	Station comm. cable 40ft.	Cavo cablaggio comando-attuatore 12m	Câble de communication com-mande-actionneur 12 m	1

GLENDINNING



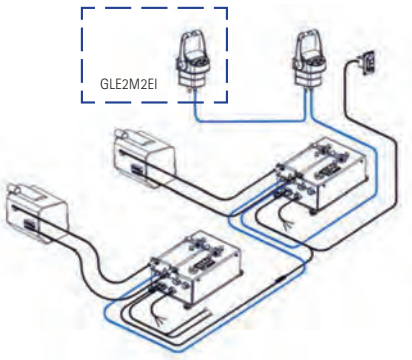

1 MOTOR INTRA/FUERABORDA O FUERABORDA 1 ESTACIÓN + TRIM	1 ENGINE I/O - OUTBOARD 1 STATION + TRIM	1 MOTORE ENTRO/FUORIBORDO O FUORIBORDO 1 STAZIONE + TRIM	1 MOTEUR IN-BORD OU HORS-BORD 1 STATION + GARNITURE	GLE1M1EC
Actuador SA2	Actuator SA2	Attuatore SA2	Actionneur SA2	1
Mando 1 palanca - 6 pulsadores	Single Control Head - 6-buttons	Telecomado 1 leva- 6 pulsanti	1 commande à levier - 6 boutons	1
Cable comunicación mando-actuador 12 m	Station comm. cable 40ft.	Cavo cablaggio comando-attuatore 12m	Câble de communication commande-actionneur 12 m	1
Resistencia terminal BUS	Terminating resistor	Resistenza terminale BUS	Résistance de borne BUS	2
Cable alimentacion DC - actuador 9 m.	Harness DC power-actuator 30ft.	Cavo alimentazione DC- attuatore 9m	Câble d'alimentation CC - actionneur 9 m.	1
Cable Trim/Encendido/Start interlock	Harness Trim/Ignition/Start Interlock	Cavo trim/accensione/start e blocco	Câble de verrouillage Trim / On / Start	1

KIT 2ª ESTACIÓN 1 MOTOR INTRA/FUERABORDA O FUERABORDA 2 ESTACIONES + TRIM	KIT 2ND STATION 1 ENG. I/O - OUTBOARD 2 STATIONS + TRIM	KIT 2° STAZIONE 1 MOTORE ENTRO/FUORIBORDO O FUORIBORDO 2 STAZIONE + TRIM	KIT DE 2E STATION 1 MOTEUR IN-BORD OU HORS-BORD 2 STATIONS + GARNITURE	GLE1M2EC
Mando 1 palanca - 6 pulsadores	Single Control Head - 6-buttons	Telecomado 1 leva- 6 pulsanti	1 commande à levier - 6 boutons	1
Cable comunicación mando-actuador 12 m	Station comm. cable 40ft.	Cavo cablaggio comando-attuatore 12m	Câble de communication com-mande-actionneur 12 m	1

GLENDINNING



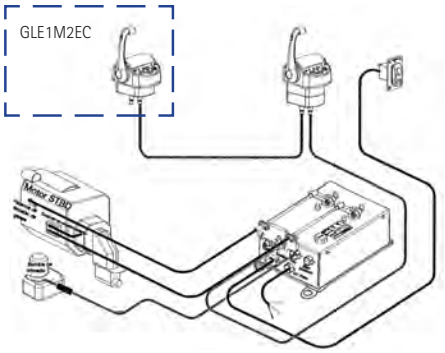

2 MOTORES INTRA/FUERABORDA O FUERABORDA 1 ESTACIÓN + TRIM	2 INBOARD ENGINS 1 STATION	1 MOTORE ENTRO/FUORIBORDO O FUORIBORDO 1 STAZIONE + TRIM	2 MOTEURS IN-BORD OU HORS-BORD 1 STATION + GARNITURE	GLE2M1EC
Actuador SA2	Actuator SA2	Attuatore SA2	Actionneur SA2	2
Mando 2 palancas - 6 pulsadores	Twin Control Head - 6-buttons	Telecomando 2 leve- 6 pulsanti	Contrôle 2 leviers - 6 boutons	1
Cable comunicación mando-actuador 12 m	Station comm. cable 40ft.	Cavo cablaggio comando-attuatore 12m	Câble de communication commande-actionneur 12 m	1
Cable comunicación actuador-actuador 6 m	Station comm. cable 20ft.	Cavo cablaggio comando- attuatore 6m	Câble de communication actionneur-actionneur 6 m	1
Resistencia terminal BUS	Terminating resistor	Resistenza terminale BUS	Résistance de borne BUS	2
Cable alimentacion DC - actuador 9 m.	Harness DC power-actuator 30ft.	Cavo alimentazione DC- attuatore 9m	Câble d'alimentation CC - actionneur 9 m.	2
Cable Encendido/Tacómetro babor.	Harness Ignition/Tach sender port	Cavo accensione/ tachimetro sinistra	Tachymètre pour câble d'alimentation / port.	1
Cable Tacómetro esribor.	Harness Tach sender starboard.	Cavo tachimetro destra	Câble tachymètre tachymétrique.	1
Cables Trim / Start Interlock.	Harness Trim / Start Interlock.	Cavo trim/ start e blocco	Trim / Start Interlock cables.	2

KIT 2ª ESTACION 2 MOTORES INTRA/FUERABORDA O FUERABORDA 2 ESTACIONES + TRIM	KIT 2ND STATION 2 ENGINE I/O - OUTBOARD 2 STATIONS + TRIM	KIT 2° STAZIONE 2 MOTORE ENTRO/FUORIBORDO O FUORIBORDO 2 STAZIONE + TRIM	KIT DE 2E STATION 2 MOTEURS IN-BORD OU HORS-BORDRES 2 STATIONS + GARNITURE	GLE2M2EC
Mando 2 palanca - 6 pulsadores	Twin Control Head - 6-buttons	Telecomando 2 leve- 6 pulsanti	2 commandes à levier - 6 boutons	1
Cable comunicación mando-actuador 12 m	Station comm. cable 40ft.	Cavo cablaggio comando-attuatore 12m	Câble de communication commande-actionneur 12 m	1

GLENDINNING



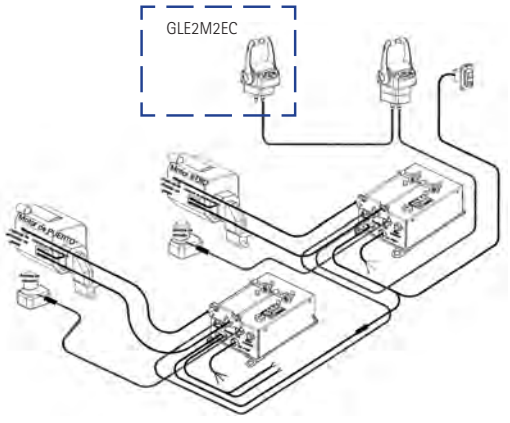

SISTEMA DE GOBIERNO Y ACCESORIOS DE INSTALACIÓN
STEERING SYSTEM & INSTALATION ACCESSORIES
SISTEMA DI GUIDA E ACCESSORI DIREZIONE
SYSTÈME DE DIRECTION ET ACCESSOIRES D'INSTALLATION

MANGUERA DE PROTECCIÓN

Manguera de protección para los cables de dirección, mando, etc. desde la salida del casco hasta el motor, presentando un sólo núcleo limpio y ordenado.
Color gris.

PROTECTIVE CABLE SYSTEM

This system gives a good protection to the service cables of outboard engines against dirt and corrosion.
Available in two diameters, complete with fittings in black colour.
Hose in grey colour.

TUBO DI PROTEZIONE

Tubo di protezione per cavi di timoneria, comando etc. dall'uscita dello scafo fino al motore, per tenere i cavi ordinati.
Colore grigio.

GAINE DE PROTECTION

Gaine de protection pour les câbles de direction, de commande, etc. de la sortie de coque au moteur, présentant un seul fourreau propre et bien rangé.
Gris.

REF			Ø INT (mm)			
GS41164	Kit	80 cm	50	1		
GS41165		80 cm	32	1		
GS41160	Terminal casco Hull end fitting Terminale scafo Terminal coque		50		1	
GS41166			32		1	
GS41161	Manguera Hose Tubo Gaine	15 m	50			15 m
GS41167		15 m	32			15 m
GS41162	Terminal motor Engine end fitting Terminale motore Terminal moteur		50		1	
GS41168			32		1	



GOLDENSHIP



GS41160 GS41166 GS41162 GS41168

ARO PROTECTOR

Protección de los cables de control y dirección. Vinilo marino resistente a los rayos U.V., gasolina y aceites.
Se ajusta alrededor de los cables.

CABLE BOOTS

Finishes and protects pass thru hole for wires and cables. Rugged marine vinyl.
Resists UV, gasoline and oil.
Cable tie snugs around wires and cables.

CUFFIA PASSACAVO

Protezione di cavi di controllo e di comando. Vinile marino resistente a raggi UV, benzina e oli.
Si adatta attorno ai cavi.

ANNEAU DE PROTECTION

Protection des câbles de commande et de direction. Vinyle marin résistant aux rayons UV, à l'essence et aux huiles.
Il s'adapte autour des fils.

REF		PARA AGUJERO FOR HOLE PER FORI POUR TROU	
THCB-2	■	2"	1
THCB-1	■	3"	1
THCB-4	■	4 1/2"	1
THCB-2W	□	2"	1
THCB-1W	□	3"	1
THCB-4W	□	4 1/2"	1



Protección de los cables de control y dirección. Fabricado en plástico cromado.

Finishes and protects pass thru hole for wires and cables.
Chrome plated plastic.

Protezione cavi di controllo e di comando.
Fabbricato in plastica cromata.

Protection des câbles de commande et de direction. Fabriqué en plastique chromé.

REF	
THRF-1CP	1

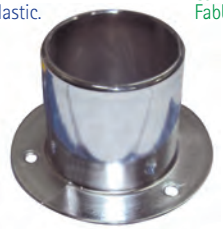

PROTECTOR ESPEJO

Fabricada en aluminio.
Con soporte para terminal del cable de dirección.

PROTECTION PLATE

Aluminum transom plate complete with support and tube for steering cable.

PIASTRA SALVA POPPA

Fabbricata in alluminio. Con supporto per i cavi di timoneria.

PLAQUE DE PROTECTION

Fabriqué en aluminium
Avec support pour de câble de direction.

REF	(mm)	
GS73132	280 x 115	1

GOLDENSHIP

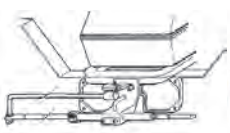

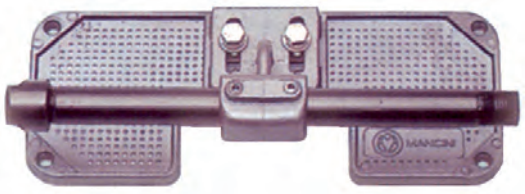

Fabricada en plástico semirígido. Color blanco. | Made in plastic. White. | In plastica semirigida. Colore bianco. | Fabriqué en plastique Couleur blanche.



REF	(mm)	
GS73133	430 x 350	1

GOLDENSHIP

Fabricada en plástico semirígido. | Made in plastic. | In plastica semirigida. | Fabriqué en plastique.



REF		(mm)	
GS73130	■	225 x 85	1
GS73131	■	270 x 100	1

GOLDENSHIP

Fabricada en polipropileno resistente a los rayos UV. Color blanco. | Made in solid UV resistant polypropilene. Colour white. | Fabbricata in polipropileno resistente ai raggi UV. Colore bianco | Fabriqué en polypropylène résistant aux UV. Couleur blanche.

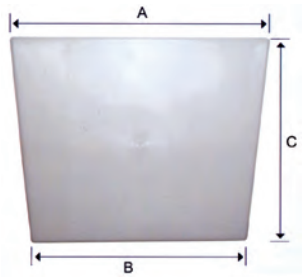

REF	A (mm)	B (mm)	C (mm)	GRUESO THICKNESS SPESSORE EPAISSEUR (mm)	
OCE100133	390	350	330	8	1
OCE100134	390	350	330	15	1

OCEANSOUTH

CONTRAPLACA TRANSOM | TRANSOM SUPPORT PLATE | CONTROPIASTRA | CONTRE-PLAQUE

Reparte el esfuerzo de los tornillos de sujección del motor. Fabricado en aluminio de alta calidad, de 10mm de espesor.

Distributes stress of engine bolts. Manufactured in high quality cast aluminum. All plates 3/8".

Contropiastra. Fabbricata in alluminio di alta qualità,di 10mm di spessore.

Répartissez l'effort des boulons de fixation du moteur. Fabriqué en aluminium de haute qualité, épaisseur 10 mm.

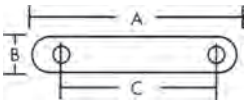



REF		A	B	C
THTSP-1	Para tornillos superiores / For top bolts / Per viti superiori / Pour vis supérieures	15"	2"	13"
THTSP-2	Para tornillos inferiores / For lower bolts / Per viti inferiori / Pour vis inférieures	12"	2"	10"

TH MARINE

TUERCA DE ENGRASE | STEERING GUARD | DADO LUBRIFICANTE | ÉCROU DE GRAISSAGE

Tuerca engrasadora para todos los cables de dirección. Sella el cable evitando el agua y la corrosión.

Steering guard to be installed in all cable and side mounted hydraulic steering systems to lubricate clean and seal the systems. Made of stainless steel.

Dado lubrificante per tutti i cavi di timoneria. Chiude il cavo evitando l'acqua e la corrosione.

Écrou de graissage pour tous les câbles de direction. Scellez le câble en évitant l'eau et la corrosion.



REF		
GS41170	7/8"	1

GOLDENSHIP

TELEFLEX «XTREME»

new

Cambios mínimos en el esquema de montaje o anidamiento de cables desde Osprey o SL-3.
Impulsiones de popa e interiores. La palanca de doble función controla el acelerador y el cambio de un motor.
Enclavamiento neutro y protección de arranque en marcha (estándar) para controles de montaje lateral.
TRIM/TILT opcional en el mango.
Función de calentamiento del motor neutro (estándar).
Interruptor de apagado de emergencia del motor para controles de montaje lateral.
Acepta todos los tipos de cable OEM y 3300 / 33C.
Cumple / excede todos los estándares aplicables.

Minimal changes to mounting scheme or cable nesting from Osprey or SL-3.
Dual function lever controls both throttle and shift
of one engine. Neutral interlock and start-in-gear protection (standard) for side mount controls.
Optional TRIM / TILT in the handle.
Neutral engine warm-up feature (standard).
Standard lanyard-style cut-off switch for emergency engine shut down for side mount controls.
Accepts every type of OEM and 3300/33C type cable.
Meets/exceeds all applicable standards.

Modifiche minime dello schema di assemblaggio
o di nidificazione dei cavi da Osprey o SL-3.
Azionamenti di popa e interni. La leva a doppia funzione controlla l'acceleratore e il cambio di un motore.
Interblocco neutro e protezione marcia in marcia (standard) per comandi di montaggio laterali.
TRIM / TILT opzionale sul manico.
Funzione di riscaldamento del motore neutro (standard).
Interruttore di arresto di emergenza del motore per comandi di montaggio laterali.
Accetta tutti i tipi di cavi OEM e 3300 / 33C.
Soddisfa / supera tutti gli standard applicabili.

Modifications minimes dans le schéma d'assemblage des câbles d'Osprey ou SL-3.
Commandes latérales ou sur console.
Le levier à double fonction contrôle l'accélérateur et l'inversion de marche.
Verrouillage neutre et protection de démarrage (standard) pour les commandes à montage latéral.
TRIM / TILT en option sur la poignée.
Fonction de chauffage neutre du moteur (standard).
Interrupteur d'arrêt d'urgence du moteur pour commandes à montage latéral.
Accepte tous les types de câbles OEM et 3300 / 33C.
Répond / dépasse toutes les normes applicables.

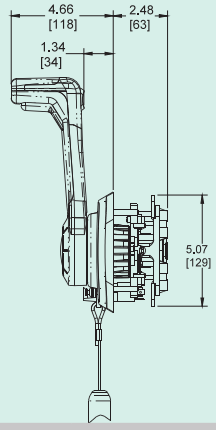



REF	LATERAL CENTRAL NEGRO	SIDE CENTER BLACK	LATERALE CENTRALE NERO	LATERAL NOIR
TXCHX8850P	Interlock Hombre al agua	Interlock Stoper, hang rope assy	Interlock Stacco aut. d'emergencia	Verrouillage Coupe circuit
TXCHX8852P	Interlock Hombre al agua Trim/Tilt	Interlock Stoper, hang rope assy Trim/Tilt switch	Interlock Stacco aut. d'emergencia Trim/Tilt switch	Verrouillage Coupe circuit Trim / Tilt

REF	LATERAL NEGRO	SIDE BLACK	LATERALE NERO	LATERAL NOIR
TXCHX8550P	Interlock Hombre al agua	Interlock Stoper, hang rope assy	Interlock Stacco aut. d'emergencia	Verrouillage Coupe circuit
TXCHX8552P	Interlock Hombre al agua Trim/Tilt	Interlock Trim/Tilt switch Stoper, hang rope assy	Interlock Trim/Tilt switch Stacco aut. d'emergencia	Verrouillage Coupe circuit Trim/Tilt
TXCHX8553P	Interlock	Interlock	Interlock	Verrouillage
TXCHX8555P	Interlock Trim/Tilt	Interlock Trim/Tilt switch	Interlock Trim/Tilt switch	Verrouillage Trim/Tilt

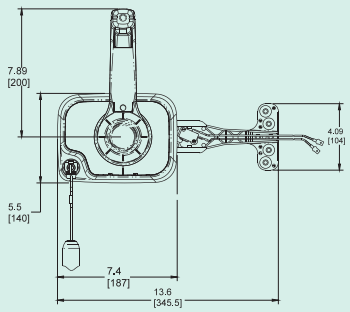

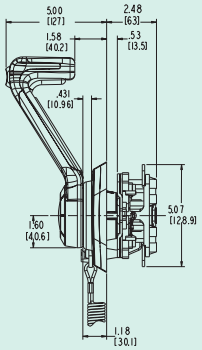



new



REF	CONSOLA NEGRO	CONSOLE BLACK	CONSOLLE NERO	CONSOLE NOIR
TXCHX8640P	Estándar	Standard	Standard	Standard
TXCHX8642P	Trim/Tilt	Trim/Tilt switch	Trim/Tilt switch	Trim/Tilt

REF	CONSOLA CROMADO	CONSOLE CHROME	CONSOLLE CROMATO	CONSOLE CHROME
TXCHX8650P	Interlock	Interlock	Interlock	Verrouillage
TXCHX8652P	Interlock Trim/Tilt	Interlock Trim/Tilt switch	Interlock Trim/Tilt switch	Trim/Tilt



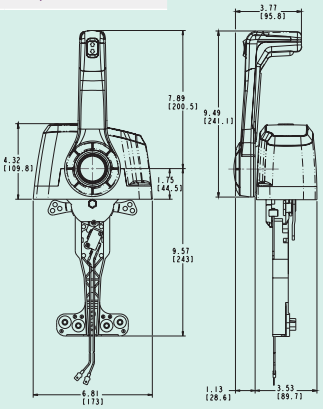

REF	CONSOLA DOBLE NEGRO	DOUBLE CONSOLE BLACK	CONSOLLE DOPPIO NERO	DOUBLE CONSOLE NOIR
TXCHX8740P	Estándar	Standard	Standard	Standard
TXCHX8742P	Trim/Tilt	Trim/Tilt switch	Trim/Tilt switch	Trim/Tilt

REF	CONSOLA DOBLE CROMADO	DOUBLE CONSOLE CHROME	CONSOLLE DOPPIO CROMATO	DOUBLE CONSOLE CHROME
TXCHX8240P	Estándar	Standard	Standard	Standard
TXCHX8242P	Trim/Tilt	Trim/Tilt switch	Trim/Tilt switch	Trim/Tilt



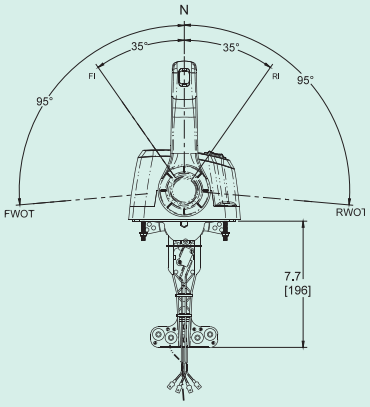

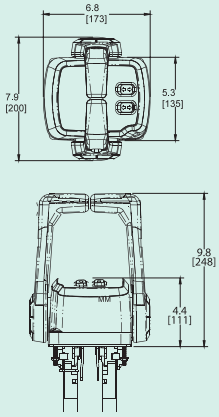



TELEFLEX «PREMIUM»

Mando a distancia de palanca con doble función (acelerador y cambio).
Para 1 motor.
Carcasa de plástico CROMADO.
Protección de arranque en punto muerto. Botón aceleración en punto muerto.
Utiliza 2 cables 33-C, OMC o Mercury.
Diseño ergonómico.

Dual function, single lever control, for virtually all stern drive, outboard and inboard engines.
Push button for neutral engine warm-up.
Neutral interlock prevents starting in gear.
For cable 33-C and 3300S, OMC or Mercury.
Ergonomic desing.

Leva di comando a distanza con doppia funzione (accelleratore e cambio). Per 1 motore.
Struttura in plastica CROMATA.
Protezione di accensione nel FOLLE.
Pulsante acceleratore nel Folle.
Utilizza 2 cavi 33C e 3300S, OMC o Mercury.
Design ergonomico.

Boîtier de commande à levier à double fonction (accélérateur et inverseur).
Pour 1 moteur.
Boîtier en plastique CHROME.
Protection démarrage au point mort. Bouton d'accélération au point mort.
Utilise 2 câbles 33-C, OMC ou Mercury.
Conception ergonomique

REF	LATERAL	SIDE	LATERALE	LATERAL
MORCH1700	Estándar cromado	Chrome plated	Cromato	Chorme



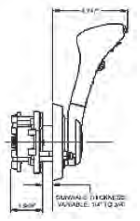

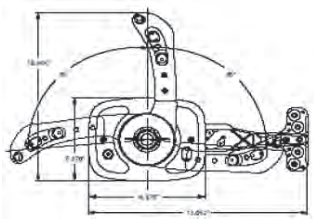

MANDO LATERAL — SIDE CONTROL — MANETTA LATERALE — COMMANDE LATÉRALE

Doble función (acelerador y cambio).
Montaje lateral empotrado.
Apropiado para embarcaciones a vela.
Botón aceleración en punto muerto. Protección de arranque en punto muerto.
Utiliza 2 cables 33-C y 3300C.

Single Lever Dual action side mount control designed for sail boats. Single lever throttle/gear control.
Neutral safety switch option (prevents starting in gear).
Uses 33-C and 3300C cables.

Doppia funzione (acceleratore e cambio).
Montaggio laterale ad incasso. Ideale per imbarcazioni a vela.
Pulsante acceleratore nel folle. Protezione di accensione nel Folle.
Utilizza 2 cavi 33C e 3300C.

Double fonction (accélérateur et inverseur).
Montage latéral encastré. Convient aux voiliers. Bouton d'accélération au point mort. Protection démarrage au point mort.
Il utilise 2 câbles 33-C et 3300C.

REF
TX172103

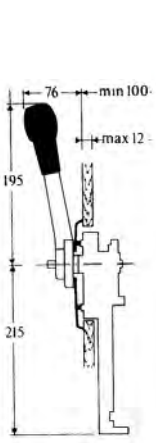



TELEFLEX

SEASTAR SOLUTIONS

Fabricado en plástico Hostafon y palancas de aluminio anodizado, independientes para acelerador y cambio.
Con kit de adaptadores para **cables 33C y 3300s,** OMC, Mercury, Mariner y Suzuki.

Manufactured in Hostafon with levers in light alloy aluminum. Can be installed in both sides. With adaptors for **33C & 3300S,** OMC, Mercury, Mariner and Suzuki.

Fabbricato in plastica. Manette in alluminio anodizzato, indipendenti per acceleratore e cambio.
Con kit di adattatori per cavi 33C e 3300S, OMC, Mercury, Mariner e Suzuky

Fabriqué en plastique et leviers en aluminium anodisé, indépendants pour l'accélérateur et l'inverseur.
Avec kit adaptateur pour câbles 33C et 3300s, OMC, Mercury, Mariner et Suzuki.

REF		
GS40001	□	114 x 228 mm

GOLDENSHIP



Palanca con doble función (acelerador y cambio).
Para motores intraborda e intra-fueraborda.
Montaje lateral superpuesto.
Utiliza cables 33-C y 3300S

Dual function, single lever control.
For virtually all stern drive, outboard and inboard engines.
Push button for neutral engine warm-up.
For 33-C & 3300S cables

Leva con doppia funzione (acceleratore e cambio).
Per motori entrobordo e entro-fuoribordo.
Montaggio laterale.
Utilizza cavi 33-C e 3300S.

Levier à double fonction (accélérateur et inverseur).
Pour moteurs in-bord et hors-bord.
Montage latéral.
Utilise des câbles 33-C et 3300S

REF	
GS40015	YMD-RCBOX-00-10 (6C-50H)

GOLDENSHIP

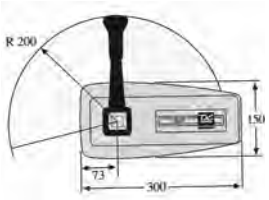



MANDO CONSOLA — CONSOLE CONTROL — MANETTA CONSOLLE — BOITIER DE CONSOLE

Palanca de función única. (1 acelerador + 1 inversor).
Para trabajos pesados.
Con freno en la palanca de acelerador.
Carcasa y palancas cromada de fundición.
Con interruptor de protección de arranque en punto muerto.
Utiliza cables 33-C y 3300C

Chrome plated heavy duty single function control for clutch and throttle.
With twisting brake on throttle handle.
Uses 33-C and 3300C cables.

Leva con unica funzione (1 acceleratore + 1 invertitore).
Corpo e leve in acciaio cromato.
Con interruttore di protezione di partenza nel folle.
Utilizza cavi 33C e 3300C.

Levier à fonction unique. (1 accélérateur + 1 inverseur).
Pour les travaux lourds.
Avec frein sur le levier d'accélérateur.
Leviers en fonte et fonte chromée.
Interrupteur de démarrage au point mort.
Utilise des câbles 33-C et 3300C

REF
PRE36468

PRETECH Cable and Controls

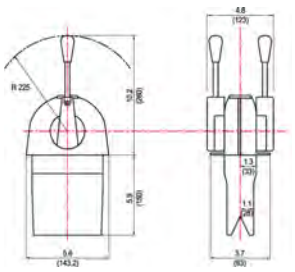



Palanca con doble función (acelerador y cambio).
Para 1 ó 2 motores.
Carcasa cromada de fundición.
Interruptor de protección de arranque en punto muerto.
Aceleración en punto muerto por desplazamiento exterior de la palanca.
Utiliza 2 ó 4 cables 33-C y 3300C.

Chrome plated control for dual function by lever (clutch and throttle).
Handle pulls out to operate neutral throttle
Neutral safety switch to ensure engine only starts when in neutral.
Uses 33-C y 3300C cables.

Leve con doppia funzione (acceleratore e cambio).
Per 1 o 2 motori.
Struttura cromata.
Interruttore di protezione di accensione nel Folle.
Acceleratore nel Folle per il distanziamento esterno dalla leva.
Utilizza 2 o 4 cavi 33-C e 3300C

Levier à double fonction (accélérateur et inverseur).
Pour 1 ou 2 moteurs.
Boîtier en fonte chromée.
Interrupteur de démarrage au point mort.
Accélération au point mort entirant le levier vers l'extérieur.
Utilisez2 ou 4 câbles 33-C et 3300C.

REF	PALANCA HANDLE LEVA LEVIER	MOTOR ENGINE MOTORI MOTEURS
PRE308601	1	1
PRE308602	2	2

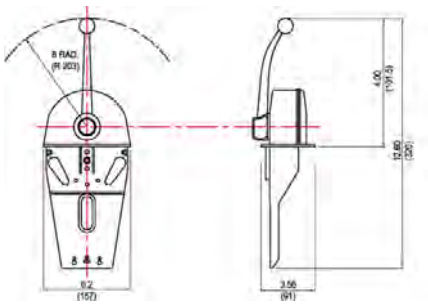

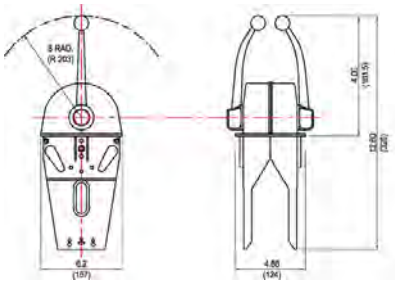



DIFERENCIAL DOBLE PUENTE

Utiliza cables 33-C y 3300S
Conecta los cables de dos mandos de modo que el motor pueda ser accionado independientemente desde los dos mandos.

DUAL STATION TRANSFER UNIT

Uses cables type 33-C & 3300S.
Connects the cables of two stations to one engine.
1 unit for throttle, 1 unit for clutch.

DIFFERENZIALE DOPPIA STAZIONE

Utilizza cavi 33C e 3300S.
Connette i cavi di due comani in modo che il motore si possa azionare indipendentemente dalle manette.

DIFFÉRENTIEL DOUBLE

Utilise des câbles 33-C et 3300S
Connecte deux câbles de commande pour que le moteur puisse fonctionner indépendamment des deux commandes.

REF
GS40010

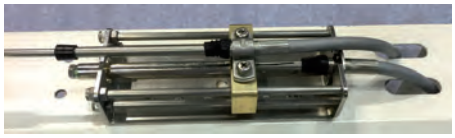

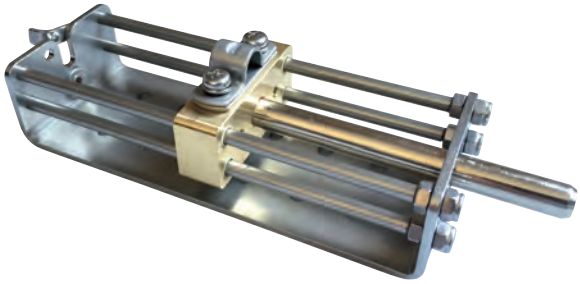

CABLES DE MANDO CONTROL CABLES CAVI COMANDO CÂBLES DE COMMANDE

3300S

Con doble funda para mejor eficiencia de trabajo
Recorrido trabajo: 76 mm.
Rosca 10-32"

Double coating for maximum efficiency.
Travel 3"
Threaded 10-32"

Con doppia guaina per una miglior efficienza di lavoro.
Estensione: 76 mm
Filetto 10.32"

Avec une double gaine pour une meilleure efficacité.
Course: 76 mm.
Fil 10-32 "

REF	
PRE6300S05	5' / 1,50 m
PRE6300S06	6' / 1,80 m
PRE6300S07	7' / 2,10 m
PRE6300S08	8' / 2,45 m
PRE6300S09	9' / 2,75 m
PRE6300S10	10' / 3,05 m
PRE6300S11	11' / 3,35 m
PRE6300S12	12' / 3,65 m
PRE6300S13	13' / 3,95 m
PRE6300S14	14' / 4,25 m
PRE6300S15	15' / 4,60 m
PRE6300S16	16' / 4,90 m
PRE6300S17	17' / 5,20 m
PRE6300S18	18' / 5,50 m
PRE6300S19	19' / 5,80 m
PRE6300S20	20' / 6,10 m
PRE6300S21	21' / 6,40 m

REF	
PRE6300S22	22' / 6,70 m
PRE6300S23	23' / 7,00 m
PRE6300S24	24' / 7,30 m
PRE6300S25	25' / 7,60 m
PRE6300S26	26' / 7,90 m
PRE6300S27	27' / 8,25 m
PRE6300S28	28' / 8,55 m
PRE6300S29	29' / 8,85 m
PRE6300S30	30' / 9,15 m
PRE6300S31	31' / 9,50 m
PRE6300S32	32' / 9,75 m
PRE6300S33	33' / 10,00 m
PRE6300S34	34' / 10,35 m
PRE6300S35	35' / 10,65 m
PRE6300S36	36' / 11,00 m
PRE6300S38	38' / 11,50 m
PRE6300S40	40' / 12,10 m

REF	
PRE6300S42	42' / 12,70 m
PRE6300S44	44' / 13,30 m
PRE6300S46	46' / 14,00 m
PRE6300S48	48' / 14,50 m
PRE6300S50	50' / 15,00 m

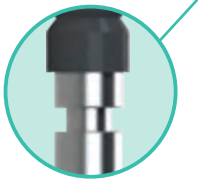

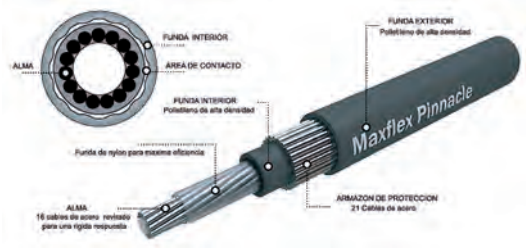

maxflex
PINNACLE

3300C

Recorrido trabajo: 76 mm. Travel 3" Estensione: 76 mm Course: 76 mm.
Rosca 10-32" Threaded 10-32" Filetto 10-32" Fil 10-32 "

REF	RO	
PRE3300C05	YMM-21005-00-00	5' / 1,50 m
PRE3300C06	YMM-21006-C8-00	6' / 1,80 m
PRE3300C07	YMM-21007-C8-00	7' / 2,10 m
PRE3300C08	YMM-21008-C8-00	8' / 2,45 m
PRE3300C09	YMM-21009-C8-00	9' / 2,75 m
PRE3300C10	YMM-21010-C8-00	10' / 3,05 m
PRE3300C11	YMM-21011-C8-00	11' / 3,35 m
PRE3300C12	YMM-21012-C8-00	12' / 3,65 m
PRE3300C13	YMM-21013-C8-00	13' / 3,95 m
PRE3300C14	YMM-21014-C8-00	14' / 4,25 m
PRE3300C15	YMM-21015-C8-00	15' / 4,60 m
PRE3300C16	YMM-21016-C8-00	16' / 4,90 m
PRE3300C17	YMM-21017-C8-00	17' / 5,20 m
PRE3300C18	YMM-21018-C8-00	18' / 5,50 m
PRE3300C19	YMM-21019-C8-00	19' / 5,80 m
PRE3300C20	YMM-21020-C8-00	20' / 6,10 m
PRE3300C21	YMM-21021-C8-00	21' / 6,40 m
PRE3300C22	YMM-21022-C8-00	22' / 6,70 m
PRE3300C23	YMM-21023-C8-00	23' / 7,00 m
PRE3300C24	YMM-21024-C8-00	24' / 7,30 m

REF	RO	
PRE3300C25	YMM-21025-C8-00	25' / 7,60 m
PRE3300C26	YMM-21026-C8-00	26' / 7,90 m
PRE3300C27	YMM-21027-C8-00	27' / 8,25 m
PRE3300C28	YMM-21028-C8-00	28' / 8,55 m
PRE3300C29	YMM-21029-C8-00	29' / 8,85 m
PRE3300C30	YMM-21030-C8-00	30' / 9,15 m
PRE3300C31		31' / 9,50 m
PRE3300C32		32' / 9,75 m
PRE3300C33		33' / 10,00 m
PRE3300C34		34' / 10,35 m
PRE3300C35		35' / 10,65 m
PRE3300C36		36' / 11,00 m
PRE3300C38		38' / 11,50 m
PRE3300C40		40' / 12,10 m
PRE3300C42		42' / 12,70 m
PRE3300C44		44' / 13,30 m
PRE3300C46		46' / 14,00 m
PRE3300C48		48' / 14,50 m
PRE3300C50		50' / 15,00 m

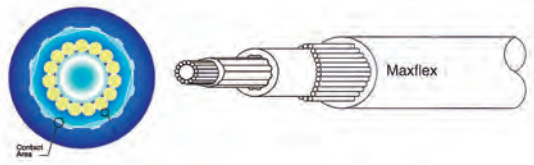

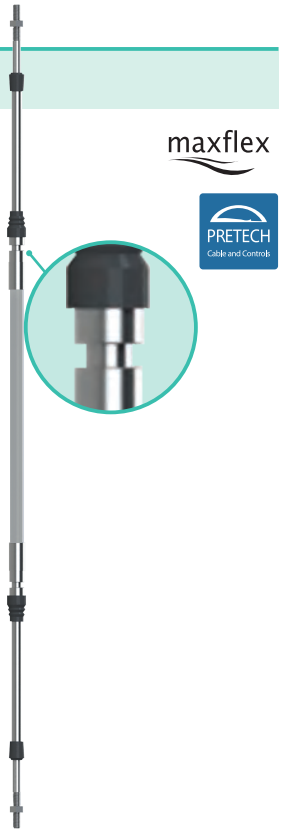

4300C

Para trabajos pesados. Heavy Duty. Per lavori pesanti Pour les travaux lourds.
Recorrido trabajo: 76 mm. Travel 3" Estensione 7,6cm Course: 76 mm. Filetage 1
Rosca 1/4-28" Threaded 1/4-28" Filetto 1/4-28" / 4-28 "

REF	
PRE6500C05	5' / 1,50 m
PRE6500C06	6' / 1,80 m
PRE6500C07	7' / 2,10 m
PRE6500C08	8' / 2,45 m
PRE6500C09	9' / 2,75 m
PRE6500C10	10' / 3,05 m
PRE6500C12	12' / 3,65 m
PRE6500C14	14' / 4,25 m
PRE6500C16	16' / 4,90 m
PRE6500C18	18' / 5,50 m
PRE6500C19	19' / 5,80 m
PRE6500C21	21' / 6,40 m
PRE6500C23	23' / 7,00 m

REF	
PRE6500C25	25' / 7,60 m
PRE6500C27	27' / 8,25 m
PRE6500C29	29' / 8,85 m
PRE6500C31	31' / 9,50 m
PRE6500C33	33' / 10,00 m
PRE6500C35	35' / 10,65 m
PRE6500C37	37' / 11,28 m
PRE6500C39	39' / 11,89 m
PRE6500C41	41' / 12,56 m
PRE6500C43	43' / 13,11 m
PRE6500C45	45' / 13,71 m
PRE6500C47	47' / 14,33 m



CABLES DE STOP — UTILITY CABLE — CAVO DI STOP — TIRETTES D'ARRÊT

REF	
PRE31507	7'/ 2,10 m
PRE31508	8'/ 2,45 m
PRE31509	9'/ 2,75 m
PRE31510	10'/ 3,05 m
PRE31511	11'/ 3,35 m

REF	
PRE31512	12'/ 3,65 m
PRE31513	13'/ 3,95 m
PRE31514	14'/ 4,25 m
PRE31515	15'/ 4,60 m
PRE31516	16'/ 4,90 m



ACCESORIOS PARA CABLES DE MANDO | ACCESSORIES FOR CONTROL CABLES | ACCESSORI CAVI COMANDI | ACCESSOIRES POUR CÂBLES DE COMMANDE

REF					
PRE331125	Horquilla	Fork	Forcella	Chappe	1
PRE31799	Rótula	Ball joint	Snodo	Rotule	1
PRE308650	Pivote	Pivot	Perno	Pivot	1
PRE332010	Abrazadera	Clamp	Ferma cavo	Collier	1
PRE331538	Platina	Shim	Piastrina	Platine	1
PRE331980	Terminal ojo	Terminale eye	Terminale cavo	Terminal	1
PRE336174	Fijador 1 cable	Stop collar 1	Fissatore 1 cavo	Fixateur de câble	1
PRE215154	Fijador 2 cable	Stop collar 2	Fissatore 2 cavi	Fixateur 2 câbles	1
PRE31916	Tirador SD para cable de paro y otros usos	SD control. Handle for throttle, choke, stop, etc.	Tirante SD Tirante per cavi e altri usi	Poignée SD pour câble d'arrêt et autres utilisations	1
PRE31917	Soporte angular para tirador SD	Mounting bracket for SD control	Supporto per tirante SD	Support angulaire pour SD shooter	1

PRETECH Cable and Controls


PRE331125


PRE31799


PRE308650


PRE332010


PRE331538


PRE331980


PRE336174


PRE215154


PRE31916


PRE31917

SISTEMA DE COMBUSTIBLE | FUEL SYSTEM | SISTEMA DI COMBUSTIBILE | SYSTÈME DE CARBURANT

CONECTOR TANQUE DE COMBUSTIBLE | TANK CONNECTOR | ATTACCO PER SERBATOIO | CONNECTEUR POUR RÉSERVOIR DE CARBURANT

REF	R.O. OEM			
GS31025		MERCURY/MARINER	1/4" NPT	1
GS31073		YAMAHA		1
GS31083	772681	JOHNSON/EVINRUDE		1
GS31081		MERCURY/MARINER		1

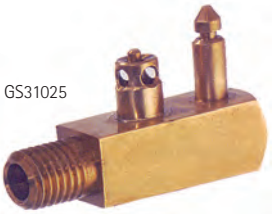
GS31025

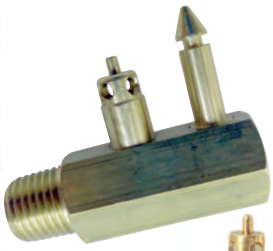
GS31073


GS31083


GS31081

REF	R.O. OEM			
GS31022		MERCURY/MARINER STANDAR		1
GS31023		MERCURY/MARINER NEW		1
GS31020		YAMAHA	1/4" NPT	1
GS31021		JOHSON/EVINRUDE	1/4" NPT	1


GS31022


GS31023


GS31020


GS31021

GOLDENSHIP MADE IN THE USA

CONECTOR DOBLE | DOUBLE CONNECTOR | CONNETTORE DOPPIO | DOUBLE CONNECTEUR

REF			
GS31091	OMC	8 mm	1
GS31092	YAMAHA	8 mm	1
GS31093	MERCURY/MARINER	8 mm	1

GOLDENSHIP


GS31091


GS31092


GS31093

CODO DEPÓSITO DE LATÓN / TANK ELBOW IN BRASS / GOMITO SERBATOIO / COUDE EN LAITON

REF		
GS31068	1/4" NPT	1

GOLDENSHIP



CONECTOR T / T CONNECTOR / CONNTETTORE "T" / CONNECTEUR T

Para conectar dos motores a un sólo depósito, o viceversa.

Fabricado en latón.
Made in machined brass.

Per collegare due motori a un singolo serbatoio o viceversa.

Pour connecter deux moteurs à un seul réservoir, ou vice versa.

REF		
GS31069	1/4" NPT	1

GOLDENSHIP



PASAMAMPAROS / THRU HULL / PASSA SCAFO / PASSE CLOISONS

Para atravesar mamparos de hasta 12 mm.
Fabricado en latón.

For bulkhead up to 12 mm.
Made in machined brass.

Per attraversare paratie fino a 12 mm.
Fabbricato in ottone.

Pour traverser des cloisons jusqu'à 12 mm.
En laiton.

REF		
GS31064	3/8"	1

GOLDENSHIP



VÁLVULA ANTIRETORNO / NON-RETURN VALVE / VALVOLA ANTI-RITORNO / CLAPET ANTI-RETOUR

Válvula antiretorno para líneas de combustible y ventilación.

In-Line non-return valve for fuel pipes.

Valvola anti-ritorno per linee di combustibile e ventilazione.

Clapet anti-retour pour les conduites de carburant et de ventilation.

REF		
GS31003	8 mm	1
GS31004	10 mm	1
GS31005	12 mm	1

GOLDENSHIP



VÁVULA DE COMBUSTIBLE / FUEL VALVE / VALVOLA CARBURANTE / VANNE POUR CARBURANT

Válvula manual a 3 vías, para combustible. Fabricada en latón pulido.
Montaje mediante soporte con 2 agujeros.Para conectar 2 depósitos a un solo motor.

Three ways fuel valve. Made in brass, with 2 holes flange. To connect 2 tanks to one single feeding pipe.

Valvola manuale a 3 uscite, per carburante. Fabbricata in ottone. Fissare mediante supporto con 2 fori.
Per collegare 2 serbatoi a un solo motore.

Vanne manuelle 3 voies, pour carburant. Fabriqué en laiton poli.
Montage par support à 2 trous pour connecter 2 réservoirs à un seul moteur.



REF			
GS31010	1/4"	10 mm	1
GS31011	3/8"	10-13 mm	1

GOLDENSHIP



REF			
GS30111	1/4"	10 mm	1
GS30112	3/8"	12 mm	1



Válvula manual a 2 vías, para combustible.
Fabricada en latón pulido.

Two ways fuel valve. Made in brass.

Valvola manuale a 2 uscite, per carburante. Fabbricata in ottone.

Vanne manuelle 2 voies, pour carburant.
Fabriqué en laiton poli.

REF		
GS31006	1/4" NPT	1/4" NPT	1

GOLDENSHIP



Válvula manual para combustible. Fabricada en latón cromado con racors. Puede montarse en linea o desmontando el soporte, incorporarla directamente al depósito.

Manual and remote fuel valve. Made in chrome plated brass. Can be mounted in line with hose or directly on gasoline tanks.

Valvola manuale per carburante. Fabbricata in ottone cromato con raccordo. Si puo' montare in linea o smontando il supporto, incorporarla direttamente al serbatoio.

Vanne manuelle pour le carburant. Fabriqué en laiton chromé avec raccords. Elle peut être montée en ligne ou en l'intégrant directement dans le réservoir sans son support.

REF			
GS31012	1/4"	10 mm	1

GOLDENSHIP





ELECTROVÁVULA DE COMBUSTIBLE — FUEL ELECTRO-VALVE — ELETTROVALVOLA CARBURANTE — ÉLECTROVANNE POUR CARBURANT

Incluye conexiones para mangueras flexibles y para tubo de cobre. Accionamiento a 12V y manual. **CE 94/25 (EN28846) y R.I.Na.DIP 61697**

Fuel cut off electrovalve 12V with manual cock. Includes racors for felxible hose and cooper tube. **CE 94/25 (EN28846) & R.I.Na.DIP 61697**

Include raccordi per tubo flessibile e per tubi di rame. Avviamento a 12V e manuale. **CE 94/25 (EN28846) e R.I.Na.DIP 61697**

Comprend des connexions pour tuyaux flexibles et tube en cuivre. Entraînement 12V et manuel. CE 94/25 (EN28846) et R.I.Na. DIP 61697

REF					
GS31013	12V	100l/h	1/4"	8-10 mm	1

GOLDENSHIP

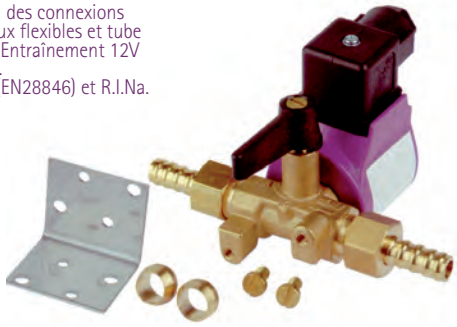

FILTROS DE COMBUSTIBLE — FUEL FILTERS — FILTRO BENZINA — FILTRES À CARBURANT

FILTRO PARA MONTAJE EN LINEA — IN-LINE FILTER — FILTRO PER MONTARE IN LINEA — FILTRE POUR MONTAGE EN LIGNE

REF			
GS31185	6-8 mm	1	
GS31186	6-8 mm	1	Cubeta extraíble / Removable bowl / Vasca estraibile / Seau amovible

GOLDENSHIP



GS31185



GS31186

REF		
REC35-80365M	6 mm	2-8 HP (2 T/ Strokes) 8-15 HP (4 T/ Strokes)

RECmar



REF	R.O. OEM		
PAF4-05000300	35-16248	6 mm	4-9.8 HP (2 T/ Strokes) 4-25 HP (4 T/ Strokes)



REF			
GS31001	50 l/h	6-8 mm	1
GS31002	150 l/h	8-10 mm	1

GOLDENSHIP



GS31001

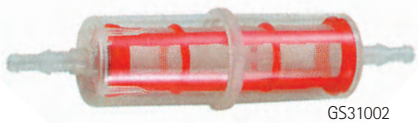

GS31002

REF			
REC40145	1/4"		
REC40155	5/16"		
REC40165	3/8"		
REC40135		5/16"	3/8"

RECmar



De metal y cristal. Montaje en línea. Racors para mangueras de 6-8-10 mm.

In-line. Clear body permits visual inspection. Racors 6-8-10 mm.

Di metallo e cristallo. Montare in linea. Raccordi per tubi da 6-8-10 mm.

En métal et verre. Montage en ligne Raccors pour tuyaux 6-8-10 mm.

REF		
GS30435	6, 8, 10 mm	1

GOLDENSHIP



FILTRO COMBUSTIBLE SEPARADOR DE AGUA / WATER SEPARATING FUEL FILTER / FILTRO SEPARATORE ACQUA-BENZINA / FILTRE À CARBURANT SEPARATEUR D'EAU

REF	MICRAS MICRON	
REC24942	10	4-7/16"
REC35-802893Q01	10	4-7/16"
REC855686	28	4-7/16"
REC35-802893Q	25	3-3/4"
RACPFF5510	10	4-7/16"

RACOR



RACPFF5510

RECmar



REC24942 REC35-802893Q01 REC855686 REC35-802893Q

Filtro original. OEM filter. Filtro benzina originale. Filtre d'origine

REF	MICRAS MICRON	
RM35-802893Q	10	3-3/4"



FILTRO CON BRACKET / OEM FILTER WITH BRACKET / FILTRO BENZINA CON SUPPORTO / FILTRE AVEC SUPPORT

Bracket de Aluminio. Con 2 tapones de bronce y 1 tubo de extensión.

Cast Aluminium Bracket. With 2 brass plugs & 1 extension tube.

Supporto in alluminio. Con 2 tappi di bronzo e 1 tubo di estensione.

Support en aluminium Avec 2 bouchons en bronze et 1 tube d'extension.

REF	MICRAS MICRON		
REC24950	25	1/4"	50 GPH
REC24952	10	1/4"	50 GPH

RECmar



FILTRO DECANTADOR GASOLINA / COMPLETE FUEL FILTER / FILTRO DECANTATORE BENZINA / FILTRE DÉCANTEUR POUR ESSENCE

Filtro de combustible con braket. Complete fuel filter with braket. Filtro combustibile con supporto. Filtre à carburant avec support.

REF		
RAC23299-10	RAC23289-10	130 HP (4 T/ Strokes)

RACOR





RECmar

REF	OEM		MICRON		
REC90794-46866	907-94469-05	REC90794-46868	10	117 l/h	175 hp







LLAVE PARA FILTRO / FILTER KEY / CHIAVE DA FILTRO / CLÉ À FILTRE

REF
RECYS-225-15



Consultar filtros específicos para una marca en su catálogo.

Consult specific filters for a brand in his catalog.

Consulta i filtri specifici per un marchio nel suo catalogo.

Consulter les filtres spécifique à une marque dans votre catalogue.

REF	
PAF40-0701000EI	70 hp



new

FILTRO DECANTADOR GASOLINA — COMPLETE FUEL FILTER — FILTRO DECANTATORE BENZINA — FILTRE DÉCANTEUR POUR ESSENCE

RACOR



	RAC120R-RAC-01	RAC320R-RAC-01	RAC320R-INOX-01	RAC320R-RAC-02
FLUJO MÁXIMO MAX. FLOW FLUSSO MASSIMO FLAFLAFLA	114 l/h 30 gph	340 l/h 60 gph	340 l/h 60 gph	340 l/h 60 gph
ELEMENTO ELEMENT ELEMENTO ELEMENT	RACS3240	RACS3213	RACS3213	RACS3220UL
CAZOLETA TRANSPARENTE (sólo se recomienda para fueraborda.) CLEAR BOWL (Just for outboards) VASCHETTA TRASPARENTE (Solo nei fuoribordo.) CAZOLETA TRANSPARENTE (uniquement recommandé pour le hors-bord.)	✔	✔	✔	✘
ROSCAS CENTRALES CENTRAL THREADS FILETTO CENTRALE FILS CENTRAUX	M18 x 1.5	1 1/4"	1 1/4"	1 1/4"
TAMAÑO ROSCA CABEZA HEAD PORT SIZE DIMENSIONE VITE TESTA TAILLE DU FIL DE TÊTE	1/4-18 NPTF	1/4-18 NPTF	1/4-18 NPTF	1/4-18 NPTF
ALTURA X Ø HEIGHT X Ø ALTEZZA X Ø HAUTEUR X Ø	166 x 81 x 81 mm	238 x 102 x 102 mm	238 x 102 x 102 mm	238 x 102 x 102 mm
PESO WEIGHT PESO POIDS	0,5 kg	0,9 kg	0,9 kg	0,9 kg
CAIDA DE PRESIÓN PRESSURE DROP CADUTA DI PRESSIONE CHUTE DE PRESSION	0.15 PSI 0.01 bar	0.61 PSI 0.04 bar	0.61 PSI 0.04 bar	0.61 PSI 0.04 bar
PRESIÓN MÁXIMA MAX. PRESSURE PRESSIONE MASSIMA PRESSION MAXIMALE	7 PSI 0.05 bar	7 PSI 0.05 bar	7 PSI 0.05 bar	7 PSI 0.05 bar
DESMONTAJE CARTUCHO-CAZOLETA ELEMENT REMOVAL UNDERBOWL RIMOZIONE DELLA CARTUCCIA DESMONTAJE CARTUCHO-CAZOLETA	25,4 mm 1"	25,4 mm 1"	25,4 mm 1"	25,4 mm 1"
TEMPERATURA DE TRABAJO OPERATING TEMPERATURE TEMPERATURA DI LAVORO TEMPERATURE DE TRAVAIL	-40ºC +124ºC			

ELEMENTOS DE RECAMBIO · ELEMENT · ELEMENTI DI RICAMBIO · CARTOUCHE DE RECHANGE

REF	R.OM. OEM	FILTRO FILTER FILTRO FILTRE
RACS3240		RAC120R-RAC-01
LENS3240		
RACS3227	YMM-2E227-00	Yamaha-Suzuki
LENS3227		
RACS3213		RAC320R-RAC-01
LENS3213		RAC320R-RAC-01 INOX RAC320R-RAC-03
RACS3214		Johnson & Evinrude
RACS3228UL		RAC320R-RAC-02, con/with/con/avec bracket RACOR



LENS3240
LENS3227
LENS3214



RACS3240
RACS3227
RACS3214



RACS3228UL

RÁCORES · RACORS · RACCORDI · RACCORDS

Para | for | per | pour: RAC120R-RAC-01, RAC320R-RAC-01, RAC320R-RAC-02

REF		90º	0º	
GS31065	1/4" NPT	3/8"		1
GS31066	1/4" NPT		5/16"	2
GS31067	1/4" NPT		3/8"	2

GOLDENSHIP



GS31065



GS31066
GS31067

SISTEMA ELÉCTRICO ELECTRIC SYSTEM · SISTEMA ELETTRICO · SYSTÈME ELECTRIQUE

FUSIBLE ATC · MARINE FUSES ATC · FUSIBILE ATC · FUSIBLE ATC

Ref		(mm)	
GS11501	3 A	19 x 19	5
GS11502	4 A	19 x 19	5
GS11503	10 A	19 x 19	5
GS11504	15 A	19 x 19	5
GS11505	20 A	19 x 19	5
GS11506	30 A	19 x 19	5

GOLDENSHIP



Con LED indicador de fundido. · With illuminated LED when blown. · Con indicatore LED. · fsdfsd

BLUE SEA SYSTEMS

Ref		(mm)	
BS5291	3 A	19 x 19	2
BS5292	5 A	19 x 19	2
BS5293	7,5 A	19 x 19	2
BS5294	10 A	19 x 19	2
BS5295	15 A	19 x 19	2
BS5296	20 A	19 x 19	2
BS5297	25 A	19 x 19	2
BS5298	30 A	19 x 19	2
BS5299	40 A	19 x 19	2





FUSIBLE ATM · MARINE FUSES ATM · FUSIBILE ATM · FUSIBLE ATM

Ref		(mm)	
AM603905	5 A	11 x 16	2
AM603910	10 A	11 x 16	2
AM603915	15 A	11 x 16	2
AM603920	20 A	11 x 16	2
AM603930	30 A	11 x 16	2

ANCOR MARINE GRADE™ PRODUCTS



FUSIBLE MAXI · FUSES MAXI · FUSIBILE MAXI · FUSIBLE MAXI

Contactos estañados para resistir a la corrosión. · Tin plated connector blades for corrosión resistance. · Connettori stagni per resistere alla corrosione. · Contacts étamés pour résister à la corrosion.

Ref		
BS5138	30 A	1
BS5139	40 A	1
BS5140	50 A	1
BS5141	60 A	1
BS5142	70 A	1
BS5143	80 A	1

BLUE SEA SYSTEMS

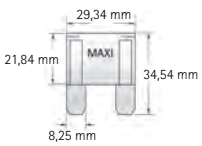



DESCONECTADOR DE SEGURIDAD / IGNITION KILL SWITCHES / INTERRUTTORE DI STOP / INTERRUPTEUR DE SÉCURITÉ

Interruptor de encendido para motores. Aísla los circuitos en unidades dobles para prevenir el retorno al alternador.

Emergency and stop switch. Isolates circuits on dual units to prevent feedback.

Interruttore di accensione per motori. Isola i circuiti in doppie unità per prevenire il ritorno all'alternatore.

Contacteur d'allumage pour moteurs. Isolez les circuits en unités doubles pour empêcher le retour à l'alternateur.



REF					
THKS-1	Un fueraborda	Single outboard	Un fuoribordo	Un hors-bord	1
THKS-2	Un intraborda	Single I/O	Un entrobordo	Un inboard	1
THKS-12	Dos fueraborda	Dual outboard	Due fuoribordo	Deux hors-bord	1
THKS-22	Dos intrabordas	Dual I/O	Due entrobordo	Deux inboard	1
THL-4	Cuerda recambio	Spare lanyard	Corda ricambio	Corde de rechange	1

REF	RO OEM		
REC87-823609A17	87-823609A17	Mercury / Mariner	1
REC37800-93954	37800-9354 37800-9353	Suzuki	1



REC87-823609A17



REC37800-9354

Interruptor de encendido para todo tipo de motores fueraborda o intraborda.

Emergency and stop switch for inboard or outboards.

Interruttore di accensione per tutti i tipi di motori entrobordo e fuoribordo.

Contacteur d'allumage pour tous types de moteurs hors-bord ou in-bord.

REF					
REC40970	Conjunto completo	Complete kit	Kit completo	Ensemble complet	1
REC40990	Cuerda tirador recambio	Spare	Corda tirante ricambio	Corde de rechange	1
GS11290	Conjunto completo	Complete kit	Kit completo	Ensemble complet	1
GS11291	Cuerda recambio	Spare lanyard	Corda ricambio	Corde de rechange	1
GS11292	Kit	Kit	Kit	kit	1



REC40970- REC40990



GS11290



GS11292



GS11291

REF	RO OEM		
REC37830-89E03	37830-84E03	Suzuki	1
REC37820-92E03	37820-92E00	Suzuki	1
REC69W-82575-00	69W-82575-0	Yamaha / Mariner	1
REC688-82575-01	688-82575-01	Yamaha / Mariner	1
REC200		Mercury / Mariner	1
REC369-0682-0	369-0682-00	Tohatsu	



REC37830-89E03



REC37820-92E03



REC69W-82575-00



REC688-82575-01



REC369-0682-0



REC200

KITS LLAVES — KILL SWITCHES KEYS — KIT CHIAVI — KITS DE CLÉS

GOLDENSHIP

REF		
GS11294	Johnson / Evinrude OMC Mercury Yamaha Honda Suzuki Tohatsu	1



LLAVE DE ARRANQUE — IGNITION STARTER SWITCHES — CHIAVE DI AVVIAMENTO — CONTACTEUR À CLÉ

3 posiciones con retroceso, Off-Contacto-Arranque (Choke). Poliester anticorrosión.
3 positions, Off-Run-Start. Magneto.
3 posizioni con ritorno: Off-Contatto-Avviamento. Poliester anticorrosione.
3 positions, Off-Contact-Start (Choke). Polyester anti-corrosion.

REF	PANELES PANELS PANNELLI PANNEAUX	TERMINALES TERMINALS TERMINALI BORNES	POSICIONES POSITIONS POSIZIONE POSITIONS	
MP39200	28 mm	3	3	1



3 posiciones con retroceso, Off-Contacto-Arranque. Poliester anticorrosión.
3 positions, Off-Run-Start. Conventional
3 posizioni con ritorno: Off-Contatto-Avviamento. Poliestere anticorrosione.
3 positions, Off-Contact-Start. Polyester anti-corrosion.

REF	RO OEM	TERMINALES TERMINALS TERMINALI BORNES	POSICIONES POSITIONS POSIZIONE POSITIONS	
MP39760	393301 508180	5 + 1	3	1



3 posiciones con retroceso, Off-Contacto-Arranque (Choke). Poliester anticorrosión. Para fuerabordas Mercury y Mariner.
3 positions, Off-Run-Start. Magneto
3 posizioni con ritorno: Off-Contatto-Avviamento. Poliestere anticorrosione. Per fuoribordo Mercury e Mariner.
3 positions, Off-Contact-Start (Choke). Polyester anti-corrosion. Pour les moteurs hors-bord Mercury et Mariner.

REF	RO OEM	TERMINALES TERMINALS TERMINALI BORNES	POSICIONES POSITIONS POSIZIONE POSITIONS	
MP41070	MC 87-17009A2, 87-17009A5	6	3	1



3 posiciones con retroceso, Off-Contacto-Arranque (Choke). Poliester anticorrosión. Para fuerabordas Mercury y Mariner.
3 positions, Off-Run-Start. Magneto.
3 posizioni con ritorno: Off-Contatto-Avviamento. Poliestere anticorrosione. Per fuoribordo Mercury e Mariner.
3 positions, Off-Contact-Start (Choke). Polyester anti-corrosion. Pour les moteurs hors-bord Mercury et Mariner.

REF	RO OEM	TERMINALES TERMINALS TERMINALI BORNES	POSICIONES POSITIONS POSIZIONE POSITIONS	
MP41000	MC 87-88107	6	3	1



3 posiciones con retroceso, Off-Contacto-Arranque. Poliester anticorrosión. Montadas por Bayliner y SeaRay (1990+).
3 positions, Off-Run-Start. Conventional.
Chiave di avviamento a 3 posizioni con ritorno: Off-Contatto-Avviamento. Poliestere anticorrosione. Montato da Bayliner e SeaRay dall'anno 1990.
3 positions, Off-Contact-Start. Polyester anti-corrosion. Assemblé par Bayliner et SeaRay (1990+).

REF	PANELES PANELS PANNELLI PANNEAUX	TERMINALES TERMINALS TERMINALI BORNES	POSICIONES POSITIONS POSIZIONE POSITIONS	
MP41030	15 mm	3	3	1



3 posiciones con retroceso, Off-Contacto-Arranque. Fabricada en latón con frontal cromado. Chrome plated brass face nut and brass back-up nut.
3 positions with return, Off-Ignition-Start.
3 posizioni con ritorno Off-Contatto-Avviamento. In ottone con frontale cromato.
3 positions, Off-Contact-Start. Fabriqué en laiton avec façade chromée. Écrou frontal en laiton chromé et écrou d'appui en laiton.

GOLDENSHIP

REF	PANELES PANELS PANNELLI PANNEAUX	TERMINALES TERMINALS TERMINALI BORNES	POSICIONES POSITIONS POSIZIONE POSITIONS	
GS11150	28 mm	3, 15A 12V	3	1



Fabricada en latón con frontal protector de goma.
3 posiciones con retroceso, Off-Contacto-Arranque.

Made in brass with rubber cap protector.
3 positions with return, Off-Ignition-Start.

Prodotta in ottone con parte frontale in gomma, 3 posizioni con ritorno, Off-Contatto-Avviamento.

En laiton avec façade de protection en caoutchouc.
3 positions, Off-Contact-Start.

REF	TERMINALES TERMINALS TERMINALI BORNES	POSICIONES POSITIONS POSIZIONE POSITIONS	
GS11151	3	3	1
GS11154	4	3	1

GOLDENSHIP



Plástico con frontal protector de goma.
3 posiciones con retroceso, Off-Contacto-Arranque.

Made in plastic with rubber cap protector.
3 positions with return, Off-Ignition-Start.

In plastica con parte frontale in gomma 3 posizioni con ritorno, Off-Contatto-Avviamento.

Plastique avec façade de protection en caoutchouc.
3 positionsOff,contact et démarrage.

REF	TERMINALES TERMINALS TERMINALI BORNES	POSICIONES POSITIONS POSIZIONE POSITIONS	
GS11152	3	3	1
GS11153	5	3	1

GOLDENSHIP



GS11152



GS11153

Plástico.
4 posiciones con retroceso, Accesorios-Off-Contacto-Arranque.

Made in plastic with rubber cap protector.
4 positions with return, Acc-Off-Ignition-Start.

Prodotta in plastica.
4 posizioni con ritorno, Blower-Off-Contatto-Avviamento.

Plastique
4 positions avec recul, Accessoires-Off-Contact-Start.

REF	PANELES PANELS PANNELLI PANNEAUX	TERMINALES TERMINALS TERMINALI BORNES	POSICIONES POSITIONS POSIZIONE POSITIONS	
GS11155	15 mm = 5/8"	7	4	1
GS11156	6 mm = 1/4"	7	4	1

GOLDENSHIP



Fabricada en plástico.
3 posiciones con retroceso, Off-Contacto-Arranque (Starter).

Made in plastic. 3 positions with return, Off-Ignition-Start (Choke).

Prodotta in plastica.
3 posizioni con ritorno, Off-Contatto-Avviamento(Starter).

En plastique.
3 positions avec recul, démarreur sans contact.

REF	PANELES PANELS PANNELLI PANNEAUX	TERMINALES TERMINALS TERMINALI BORNES	POSICIONES POSITIONS POSIZIONE POSITIONS	
GS11158	15 mm = 5/8"	6	3	1
GS11157	6 mm = 1/4"	6	3	1

GOLDENSHIP



GS11158



GS11157

Fabricada en plástico.
Con cables incluidos.
3 posiciones con retroceso, Off-Contacto-Arranque (Starter).

Made in plastic.
3 positions with return, Off-Ignition-Start (Choke).
With wires included.

Prodotta in plastica.
Con cavi inclusi.
3 posizioni con ritorno, Off-Contatto-Avviamento (Starter).

En plastique.
Avec câbles inclus.
3 positions avec recul, démarreur sans contact.

REF	TERMINALES TERMINALS TERMINALI BORNES	POSICIONES POSITIONS POSIZIONE POSITIONS	
GS11159	6	3	1

GOLDENSHIP



LUBRICANTES Y PINTURAS | LUBRICANTS & PAINTS | LUBRIFICANTI E PITTURE | LUBRIFIANTS ET PEINTURES

PINTURA EN SPRAY | SPRAY PAINT | PITTURE SPRAY | PEINTURE EN SPRAY

Sprays de pintura con los colores originales para retoque de los motores fueraborda, interiores, intra-fueraborda y colas fueraborda más usuales. Capacidad: 400ml.

Spray paints with the original colors for maintenance and painting inboards and outboard marine engine as well as stern-drives units. Bottle: 400ml.

Vernice spray con i colori originali per ritocchi dei motori fuoribordo, entrobordo, entro-fuoribordo e i piedi. Capacità: 400ml.

Peinture en aérosol aux couleurs originales pour la retouche des moteurs hors-bord, in-bord et les embases les plus courantes. Capacité: 400 ml

REF		COLOR	COLOUR	COLORE	COULEUR
GS90019		Barniz transparente	Clear Varnish	Vernice trasparente	Vernis transparent
PS110410	Evinrude	Azul (1989)	Blue (1989)	Blu (1989)	Bleu (1989)
GS90037	Evinrude	Azul XP	Blue XP	Blu XP	XP bleu
PS111139	Honda	Gris Beige (1991)	Grey (1991)	Grigio-Beige (1991)	Gris Beige (1991)
GS90038	Honda	Gris metalizado	Grey Metal	Grigio metallizzato	Gris métallisé
GS90023	Honda	Plata met.	Silver Metal	Argento metallizzato	Argent métallisé
GS90030	Johnson	Blanco (1972-90) - (1993+)	White (1972-90) - (1993+)	Bianco (1972-90) - (1993+)	Blanc (1972-90) - (1993+)
GS90026	Johnson	Blanco (1981-83)	White (1981-83)	Bianco (1981-83)	Blanc (1981-83)
GS90039	Johnson	Plata metalizado	Silver Metal	Argento metallizzato	Argent métallisé
GS90040	Mariner	Gris	Grey	Grigio	Gris
GS90002	Mercury	Negro	Black	Nero	Noir
GS90049	Parsun	Negro	Black	Nero	Noir
GS90032	Suzuki	Plateado (1983-89)	Silver (1983-89)	Argento (1983-89)	Argent (1983-89)
GS90025	Suzuki	Gris metalizado	Grey Metal	Grigio metallizzato	Gris métallisé
GS90042	Suzuki	Negro metalizado	Black Metal	Nero Metallizzato	Noir métallisé
GS90024	Tohatsu	Gris Metal (1991)	Grey Metal (1991)	Grigio Metallizzato (1991)	Gris métallisé (1991)
GS90027	Tohatsu	Azul Cobalto (1988-90)	Blue Cobalt (1988-90)	Blu Cobalto (1988-90)	Bleu cobalt (1988-90)
GS90043	Tohatsu	Azul	Blue	Blu	Bleu
PS114694	Yamaha	Azul Metal (1974)	Blue Metal (1974)	Blu Metallizzato (1974)	Bleu métal (1974)
GS90021	Yamaha	Azul (1984+)	Blue (1984+)	Blu (1984+)	Bleu (1984+)
GS90020	Yamaha	Azul Origen	Blue Origin	Blue Origen	Bleu Origine
GS90022	Yamaha	Gris Metal (1994)	Grey Metal (1994)	Grigio Metallizzato (1994)	Gris métallisé (1994)
PS110485	Yamaha	Gris Capot (1994)	Grey Capot (1994)	Grigio Capot (1994)	Gris capot (1994)



GOLDENSHIP

PROTECTOR DE MOTOR | ENGINE PROTECTOR | PROTETTORE MOTORE | PROTECTION DU MOTEUR

Producto a base de aceites y grasas que protege del óxido y la corrosión las superficies exteriores y partes eléctricas de los motores durante el invernaje. Evita la formación de agarrotamientos debido a la presencia de salitre. Facilita el arranque eliminando los residuos de agua y humedad.
Se elimina facilmente.

Oil & grease made, protects from rust & corrosion external engine surface during winter storage. Removes salt deposit and loosens rusted parts.
Easy to remove.

Prodotto a base di olio e grasso che protegge dall'ossidazione e dalla corrosione le superfici esterne e parti elettriche dei motori durante l'invernaggio. Evita la formazione dell'ossidazione dovuta alla presenza del salmastro. Facilita l'accensione eliminando i residui di acqua e umidità.
Si elimina facilmente.

Produit à base d'huiles et de graisses qui protège les surfaces extérieures et les parties électriques des moteurs de la rouille et de la corrosion pendant l'hivernage. Il empêche la formation de crises dues à la présence de salpêtre. Il facilite le démarrage en éliminant les résidus d'eau et d'humidité.
Il s'enlève facilement.

REF	
GS90090	500 ml



GOLDENSHIP

PROTECTOR DIELÉCTRICO | DIELECTRIC PROTECTOR | PROTETTORE DIELETTRICO | PROTECTEUR DIÉLECTRIQUE

Protector dieléctrico antihumedad para uso marino.
Protege de la humedad y oxidación todos las partes eléctricas y mecánicas de los motores marinos. Ideal para invernaje de motores y mantenimiento de temporada.

Prevents humidity and corrosion of all electric and mechanical parts in marine engines. Specially indicate for winter storages and maintenance in the season.

Protettore dielettrico antiumidità per uso marino. Protegge dalla umidità e dall'ossidazione tutte le parti elettriche e meccaniche dei motori marini.
Ideale per invernaggio dei motori e manutenzione di lunga durata.

Protecteur diélectrique anti-humidité pour usage marin. Protège toutes les pièces électriques et mécaniques des moteurs marins contre l'humidité et l'oxydation.
Idéal pour l'hivernage des moteurs et l'entretien saisonnier.

REF	
GS90092	400 ml



GOLDENSHIP

DESCALCIFICADOR DE MOTOR / DESCALING ENGINE FLUSH / DECALCIFICANTE MOTORE / DÉTARTRANT MOTEUR

Limpiador para eliminar las incrustaciones, algas, y suciedad en los motores marinos.
No daña las juntas ni impulsores de goma.

Removes scale, zebra mussels, general marine growth and vegetation rom all marine engines.

Pulitore per eliminare le incrostazioni, alghe, e sporcizia nei motori marini.
Non danneggia guarnizioni e giranti in gomma.

Nettoyant pour éliminer le tartre, les algues et la saleté dans les moteurs marins.
N'endommage pas les joints ou les turbines en caoutchouc.

REF	
STA92600	3,8 L

Star brite



LIMPIADOR CARBURADOR Y STARTER / CARBURATOR & CHOKE CLEANER / PULITORE CARBURATORE / NETTOYANT CARBURATEUR

Aerosol para motores de 2 y 4 tiempos.
Para limpieza del carburador y de los componentes internos del motor. Asegura arranques fáciles y ralentí suave.
Despega los aros de los pistones. Restablece la potencia del motor.

Spray for all 2 and 4 cycle engines.
Marine motor de-carb.
Dissolves gum, varnish dirt and carbon deposits.Restore power & performance.
Reduce fuel consumption.

Aerosol per motori di 2 e 4 tempi.
Per la pulizia del carburatore e dei componenti interni del motore. Assicura partenze più facili e un minimo stabile. Lubrifica le fasce dei pistoni. Ristabilizza la potenza del motore.

Spray pour moteurs 2 et 4 temps.
Pour nettoyer le carburateur et les composants internes du moteur. Assure des démarrages faciles et un ralenti en douceur.
Décolle les segments du piston. Restaure la puissance du moteur.

REF	
GEGC15	354 g

GOLD EAGLE



ACEITE DE INVERNAJE / FOGGING OIL / OLIO INVERNAGGIO / FOGGING OIL

Para inyectar en los carburadores de motores a 2 y 4 tiempos.
Protege las paredes de los cilindros, aros de pistones y otras superficies de la cámara de combustión durante los periodos de invernaje, facilitando el arranque del motor después de éste periodo.

Prevents corrosion when storing inboard or outboard engines for a extended period of time. Special formula makes starting engine after storage quick and easy.

Da inserire nei carburatori dei motori da 2 e 4 tempi.
Protegge le pareti dei cilindri, le fasce dei pistoni e altre superfici della camera di combustione durante il periodo di invernaggio, facilitando la partenza del motore dopo questo periodo.

Pour injecter dans les carburateurs des moteurs 2 et 4 temps.
Il protège les parois des cylindres, segments et autres surfaces de la chambre de combustion pendant les périodes d'hivernage, facilitant le démarrage du moteur après cette période.

REF	
STA84800	3,8 L
GE22001	340 g

RECMAR

GE22001



STA84800

ADITIVO GASOLINA / GASOLINE ADDITIVE / ADDITIVO BENZINA / ADDITIF ESSENCE

Elimina y previene los problemas del ethanol.
Reduce todas las emisiones contaminantes. Estabiliza la química del combustible durante 1 año.
Reduce el mantenimiento del sistema de combustible.
Elimina la producción de carbonilla.
Reduce el consumo de combustible.

Eliminates and prevents ethanol fuel problems.
Reduces all emisions.
Prevents fuel oxidation and stabilizes fuel chemistry for at least 1 year.
Lower fuel system maintenance.
Eliminates carbon build-up.
Increases fuel economy.

Elimina e previene i problemi dell'etanolo. Riduce tutte le emissioni contaminanti.
Stabilizza la chimica del combustibile durante 1 anno.
Elimina la produzione di residui carboniosi. Riduce il consumo del combustibile.

Élimine et prévient les problèmes d'éthanol.
Réduise toutes les émissions polluantes. Stabilise la chimie du carburant pendant 1 an.
Réduit l'entretjen du système de carburant. Elimine la production de charbon.
Réduis la consommation de carburant.

REF		PARA TRATAR HASTA TREAT UP TRATTARE FINO A POUR TRAITER JUSQU'À
STA93008	237 ml	475 L
STA93016	473 ml	950 L

Star brite STAR TRON



RECAMBIOS MARINOS

ESTABILIZADOR DE GASOLINA | FUEL STABILIZER | STABILIZZATORE BENZINA | STABILISATEUR D'ESSENCE

Elimina el agua, limpia los carburadores e inyectores. Contiene antioxidantes para prevenir el óxido y la corrosión. No requiere vaciar el depósito para el invernaje y mantiene el combustible fresco para un rápido y fácil arranque.

Keeps fuel fresh and allows for easier starts after periods of storage. Removes water, cleans carburetors and fuel injectors. Contains antioxidant to prevent rust and corrosion.

Elimina l'acqua, pulisce i carburatori e iniettori. Contiene antiossidanti per prevenire l'ossidazione e la corrosione. Non è necessario svuotare il serbatoio per l'invernaggio e mantiene il carburante fresco per una rapida e facile partenza.

Élimine l'eau, nettoie les carburateurs et les injecteurs. Contient des antioxydants pour empêcher la rouille et la corrosion. Il ne nécessite pas de vider le réservoir pour l'hivernage et maintient le carburant frais pour un démarrage rapide et facile.

REF		PARA TRATAR HASTA TREAT UP TRATTARE FINO A POUR TRAITER JUSQU'À	
GE22207	475 ml	150 L	Gasolina | Gasoline | Benzina | Gasoline
GE22254	946 ml	1.200 L	Diesel

GOLD EAGLE



GE22207 GE22254

LIMPIADOR DEPÓSITOS | FUEL TANK CLEANER | PULITORE SERBATOIO | NETTOYANT RÉSERVOIR

Excepcionalmente efectivo en la limpieza de lodos y algas en depósitos de gasolina o diesel. Retrasa la formación de nuevas algas que puedan contaminar el combustible. Nuevo y revolucionario aditivo que reemplaza los costosos sistemas de limpieza de los depósitos de combustible.

Exceptionally effective at cleaning sludge and algae from gasoline and diesel tanks. Slows the recurrence of new algae that can contaminate fuel. A revolutionary new additive that replaces expensive fuel polishing and tank cleaning.

Eccezionale efficacia nella pulizia dal fango e alghe nel serbatoio benzina o diesel. Ritarda la formazione di nuove alghe che possono contaminare il combustibile. Nuovo e rivoluzionario additivo che rimpiazza i costosi sistemi di pulizia dei serbatoi del combustibile.

Exceptionnellement efficace pour nettoyer les boues et les algues dans les réservoirs d'essence ou de diesel. Il retarde la formation de nouvelles algues qui peuvent contaminer le carburant. Nouvel additif révolutionnaire qui remplace les systèmes coûteux de nettoyage des réservoirs de carburant.

REF		PARA TRATAR HASTA TREAT UP TRATTARE FINO A POUR TRAITER JUSQU'À
STA93664	1,9 L	950 L
STA93116	473 ml	1.900 L

Star brite STAR TRON



STA93116 STA93664

LUBRICANTE PARA 2 TIEMPOS | 2 STROKE LUBRICANT | LUBRIFICANTE PER 2 TEMPI | HUILE 2 TEMPS TC-W3

2 STROKES TC-W3

new

Especialmente formulado para motores marinos de 2 tiempos. Inhibidor de corrosión y herrumbre. Gran capacidad de limpieza de las partes internas del motor (pistón, bujías...), evita el pegado de segmentos y la formación de depósitos. Alta fluidez a bajas temperaturas.

Specially formulated for 2-stroke marine engines. Excellent anti-wear protection for the internal parts of the engine. When the engine is not in use, it effectively protects from corrosion and rust. Very effective in maintaining the internal parts of the engine (pistons, spark plugs, etc.) clean, avoiding piston rings from sticking and sediments accumulating.

Formulazione specificamente studiata per motori marino a 2 tempi. Eccellente protezione contro l'usura dei componenti interni del motore. Garantisce un'alta protezione contro la corrosione e la ruggine. Contribuisce a mantenere pulite le parti interne del motore (pistone, candela, ecc.), evita l'aderenza delle fasce del pistone e la formazione di depositi. Alta fluidità a basse temperature.

Spécialement conçu pour des moteurs 2 temps, Elle vous offre une excellente protection face à l'usure des éléments internes du moteur et une haute protection contre la corrosion et la rouille. Elle a une haute fluidité à basses températures. Notamment applicable dans des conditions climatiques très froides.

QUALITY LEVELS
NMMA TC-W3
(NMMA, National Marine Manufacturers Association)

REF		
REC2TU6	1 L	6
REC2TU3	5 L	3

RECLUBE



RECAMBIOS MARINOS

ACEITE MEZCLA 2 TIEMPOS — 2 CYCLE OIL S — OLIO MISCELA 2 TEMPI — HUILE 2 TEMPS

REF	R.O. OEM			
RM92-858026QB1U6	92-858026QB1	1 L	6	PREMIUM PLUS
RM92-858027QB1U3	92-858027QB1	3,8 L	3	PREMIUM PLUS
RM92-858037QB1U3	92-858037QB1	3,8 L	3	OPTIMAX /DFI



RM92-858026QB1U6



RM92-858027QB1U3



RM92-858037QB1U3

ACEITE MINERAL FUERABORDAS TC-W3 — 2-CYCLE OIL TC-W3 — OLIO MINERALE PER FUORIBORDO TC-W3 — HUILE MINÉRALE 2 TEMPS TC-W3

Utilize el TC-W3 para obtener mayor potencia en su motor. Provee de una mayor protección contra la carbonilla en los pistones, el resecamiento de los aros, el fallo de las bujías en el arranque y del óxido. Recomendado para los sistemas de inyección de aceite.

Formulated from ultra-clean base stock oil to provide superior protection against piston scuffing, bearing wear, spark plug fouling, pre-ignition and rust. This formulation has outstanding lubricity and miscibility for better mixing of fuel and oil, resulting in a cleaner running engine. Contains no phosphorus. Recommended for oil injection systems. Outboard motor Oil.

IUtilizare il TC-W3 per ottenere maggior potenza nel motore. Fornisce una maggiore protezione contro i residui di combustione nei pistoni, l'essicazione delle fasce, il non funzionamento delle candele nell'accensione. Raccomandato per i sistemi di iniezione ad olio.

Utilisez la TC-W3 pour augmenter la puissance de votre moteur. Elle offre une meilleure protection contre le carbone dans les pistons, le séchage des segments, la défaillance des bougies d'allumage au démarrage et la rouille. Recommandé pour les systèmes d'injection d'huile.

REF	R.O. OEM		
LUB11591U12		1 L	12
RM92-858021QB1U6	92-858021QB1	1 L	6
RM92-858022QB1U3	92-858022QB1	3,8 L	3
RM92-858023QB1U2	92-858023QB1	9,5 L	2



LUB11591U12



RM92-858021QB1U6



RM92-858022QB1U3



RM92-858023QB1U2

SAE 5W40

new

ACEITE 100% SINTÉTICO — 100% SYNTHETIC OIL — OLIO 100% SINTETICO — HUILE 100% SYNTHÉTIQUE

Lubricante marino 100% sintético. Excelente fluidez en frío, facilita el arranque y reduce los desgastes de motor. Evita el pegado de segmentos al dispersar lodos, barnices y otros productos de oxidación a altas temperaturas. Contiene inhibidores antiherrumbre y anticorrosión.

100% synthetic lubricant designed for all types of 4T petrol engines. Good fluidity in cold temperatures facilitates performance and reduces engine wear. It avoids piston rings from sticking by clearing dirt, varnish and other oil oxidation deposits when subject to high temperatures. Contains effective anti-rust and anti-corrosion inhibitors that protect the engine in the marine environment.

Lubrificante 100% sintetico pensato per motori a benzina 4T di ogni tipo. Buona fluidità a freddo, facilita la messa in moto e riduce l'usura del motore. Evita l'aderenza delle fasce del pistone, disperdendo fanghi, lacche e altri prodotti derivanti dall'ossidazione dell'olio ad alte temperature. Contiene efficaci inibitori antiruggine e anticorrosione, per proteggere il motore in ambiente marino.

Lubrifiant 100% synthétique adapté à tout type de moteurs à essence 4T. Bonne fluidité à froid qui aide au démarrage et réduit la détérioration du moteur. Évite le colllage des segments lors de la dispersion de boue dans le moteur, vernis et autres produits oxydant l'huile à haute température. Contient des inhibiteurs de corrosion et antirouille.

QUALITY LEVELS
API SN/CF
ACEA A3/B3/B4
MB 229.3
VW 502.00/505.00
RN 710
OPEL A&B
JASO MA2

REF		
REC5W40U6	1 L	6
REC5W40U3	5 L	3



Especialmente desarrollado para motores de alto rendimiento. Las propiedades especiales de este aceite le permiten lubricar el motor incluso durante el arranque a baja temperatura. El aceite combate la acumulación de lodo y brinda una excelente protección contra el desgaste. Especialmente adecuado para motores que están sujetos a arranques y paradas frecuentes.

Specially developed for high performance engines. The special properties of this oil allow it to lubricate the engine even during low temperature starting. The oil combats sludge buid-up and gives excellent protection against wear. Particularly suitable for engines that are subject to frequent starting and stopping.

Sviluppato appositamente per motori ad alte prestazioni. Le proprietà speciali di questo olio consentono di lubrificare il motore anche durante l'avviamento a bassa temperatura. L'olio combatte il fango accumulato e offre un'eccellente protezione contro l'usura. Particolarmente adatto per motori soggetti a frequenti avviamenti e arresti.

Spécialement développé pour les moteurs hautes performances. Les propriétés particulières de cette huile vous permettent de lubrifier le moteur même lors d'un démarrage à basse température. L'huile combat l'accumulation de boue et offre une excellente protection contre l'usure. Particulièrement adapté aux moteurs soumis à des démarrages et arrêts fréquents.

REF	R.O. OEM		
REC21363429	21363429	1 L	API SM
REC21363430	21363430	5 L	



REC21363429 REC21363430

SAE 10W30
SAE 10W40

REF	R.O. OEM		
RM92-8M0086220U6	92-8M0086220	1 L	6
RM92-8M0086221U3	92-8M0086221	4 L	3



RM92-8M0086220U6 RM92-8M0086221U3

ACEITE SINTÉTICO PREMIUM

Lubricante marino reforzado con bases sintéticas, para motores gasolina 4T fueraborda e intraborda. Especificaciones NMMA FC-W. HTHS elevado, asegura viscosidad a elevadas temperaturas. Anticorrosivo con antioxidantes incorporados, elevadas propiedades antiespumantes.

SYNTHETIC PREMIUM OIL

Marine lubricant strengthened with a synthetic base, especially formulated for outboard and inboard 4T petrol engines, with NMMA FC-W specifications. With a high HTHS, it ensures great viscosity at high temperatures.
Better anti-oxidant resistance.
Improved anti-foaming properties.

OLIO SINTETICO PREMIUM

Lubrificante marino potenziato con basi sintetiche, specificamente formulato per motori a benzina 4T fuoribordo ed entrobordo, a norma specifiche NMMA FC-W. Con indice HTHS più elevato, garantisce un'alta viscosità a temperature elevate.
Aumenta la protezione anticorrosione.
Maggior resistenza all'ossidazione.
Proprietà antischiuma migliorate.

HUILE SYNTHÉTIQUE PREMIUM

new

Lubrifiant marin renforcée avec des bases synthétiques, pour les moteurs à essence 4T hors-bord et inboard avec des spécifications NMMA FC-W. Avec des HTHS supérieures, qui vous assure une haute viscosité à des températures élevés. Resistance antioxidante majeure. Propriétés anti-mousse améliorés.

QUALITY LEVELS:
NMMA FC-31015T
(NMMA, National Marine Manufacturers Association)
API SJ/SG

REF		
REC10W30U6	1 L	6
REC10W30U3	5 L	3

QUALITY LEVELS
NMMA FC-11815R
(NMMA, National Marine Manufacturers Association)
API SJ/SG

REF		
REC10W40U6	1 L	6
REC10W40U3	5 L	3



RECAMBIOS MARINOS

SAE 15W40

MULTIGRADE HIGH PERFORMANCE

new

Lubricante multigrado marino, superior al nivel SHPD, especialmente formulado para motores marinos turboalimentados. Contiene inhibidores de corrosión, oxidación, herrumbre y antiespumantes. Capacidad detergente, reduce los depósitos en válvulas y pistones. Excelentes cualidades dispersantes antilodos.

Marine multigrade oil, exceeds the SHPD performance level, especially formulated to meet the demanding requirements of 4-stroke diesel turbocharged engine manufacturers in the marine environment. Contains effective corrosion, oxidation, rust and foam inhibitors. Excellent detergent effect that reduces sediments in valves and pistons. Very good dispersion qualities that prevent sludge in cold temperatures.

Olio marino multigrado, con prestazioni oltre il livello SHPD, specificamente formulato per soddisfare le particolari esigenze dei motori diesel a 4 tempi turboalimentati in ambiente marino. Contiene efficaci inibitori contro corrosione, ossidazione, ruggini e formazione di schiuma. Eccelente capacità detergente, riduce i depositi in valvole e pistoni. Ottime qualità disperdenti che impediscono la formazione di fanghi a freddo.

Huile multigrade marine, dépasse les niveaux de performances SHPD, spécialement conçu pour les moteurs diesel 4T avec turbo. Contient des inhibiteurs contre la corrosion, l'oxydation, antirouille et anti-mousse. Évite les dommages dans les chemises, habituel sur les moteurs suralimentés de haute puissance. Haute qualité dispersante pour empêcher l'apparition de boue dans le moteur.

QUALITY LEVELS
API CI-4/SL
ACEA E7
Caterpillar ECF-1[a]
Cummins CES 20071/72/76/77/78
MACK EO-M+
MAN M3275
MB 228.3
MTU Level 2
Renault RLD/RLD-2
Volvo VDS-2 VDS-3

REF		
REC15W40U3	5 L	3



ACEITE MINERALES VDS-3 / VDS-3 MINERAL GEAR OILS / OLIO MINERALE VDS-3 / HUILE MINÉRALE VDS-3

VDS-3 cubre los requisitos más estrictos sobre la limpieza del pistón en comparación con VDS-2, lo que garantiza la durabilidad y fiabilidad de los motores. La alta calidad del aceite VDS-3 permite un aumento en los intervalos de drenaje. Para motores diesel y de gasolina (ver manuales de los operadores).

VDS-3 covers even more stringent requirements on piston cleanliness and bore polish compared to VDS-2, ensuring the durability and reliability of the engines. The high quality of VDS-3 oil allows in certain cases an increase in drain intervals. Fits both diesel and gas engines (check operators manuals).

VDS-3 copre requisiti ancora più stringenti sulla pulizia del pistone e sulla lucidatura del foro rispetto a VDS-2, garantendo la durata e l'affidabilità dei motori. L'alta qualità dell'olio VDS-3 consente un aumento degli intervalli di scarico. Adatto sia ai motori diesel che a quelli a gas (consultare i manuali degli operatori).

Le VDS-3 couvre les exigences les plus strictes en matière de nettoyage des pistons par rapport au VDS-2, ce qui garantit la durabilité et la fiabilité des moteurs. La haute qualité de l'huile VDS-3 permet une augmentation des intervalles de vidange. Pour les moteurs diesel et essence (voir les manuels d'utilisation).

REF	R.O. OEM.		
REC22479638	22479638	1 L	API CI-4
REC22479642	22479642	5 L	ACEA E5



REC22479638

REC22479642

ACEITE MOTORES DIESEL / DIESEL ENGINES OIL / OLIO MOTORE DIESEL / HUILE MOTEUR DIESEL

REF	R.O. OEM		
RM92-8M0096794U3	92-8M0096794	3,8 L	3



SAE 25W40

ACEITE SEMISINTÉTICO 4T

Lubricante semisintético para motores con cargas y RPM elevadas. Excelentes inhibidores de corrosión, oxidación y desgaste. Buenas propiedades de arranque en frío, antiespumantes incorporados.



4 STROKES SEMI-SYNTHETIC OIL

Semi-synthetic oil for 4-stroke engines suitable for engines with high RPM and heavy loads. Lubrication of all engine components, great anti-corrosion, anti-oxidation and anti-wear properties. Good performance in cold conditions. Keeps the engine clean and increases protection against corrosion in saline water environments.

QUALITY LEVELS
NMMA FC13101T
(NMMA, National Marine Manufacturers Association)
API SJ/SG

OLIO SEMISINTETICO 4 TEMPI

Olio semisintetico per motori a 4 tempi, adatto a motori con elevati RPM e carichi pesanti. Lubrificazione di tutti i componenti del motore, elevate proprietà anticorrosione, antiossidazione e antiusura. Buone proprietà di avvio a freddo.

HUILE SEMI-SYNTHÉTIQUE 4T

new

Huile semi-synthétique pour des moteurs 4T adapté aux moteurs avec des hauts RPM. Grande capacité anti-corrosion, anti-oxydation et contre l'usure. Propriétés adéquates pour un démarrage à froid. Elle maintient la propreté du moteur et augmente la protection face à la corrosion du à l' environnement salin.

REF		
REC25W40U3	5 L	3

ACEITE SINTÉTICO PARA MOTORES VERADO

SYNTHETIC OIL FOR VERADO ENGINES

OLIO SINTETICO PER MOTORI VERADO

HUILE SYNTHÉTIQUE POUR VERADO

REF	R.O. OEM		
RM92-8M0086227U3	92-8M0086227	4 L	3



ACEITE MOTORES GASOLINA

GASOLINE ENGINES OIL

OLIO MOTORE BENZINA

HUILE MOTEUR ESSENCE

REF	R.O. OEM		
RM92-8M0086224U3	92-8M0086224	3,8 L	3



ACEITE SINTÉTICO TRASMISIONES

SYNTHETIC DRIVES OIL

OLIO SINTETICO PER TRASMISSIONE

HUILE SYNTHÉTIQUE POUR EMBASES

Aceite sintético de altas prestaciones.
Para colas de transmisión mecánica.

High performance synthetic Lower Unit Gear Lube for mechanical drives.

Olio sintetico di alte prestazioni.
Per piedi poppieri a trasmissione meccanica.

Huile synthétique haute performance.
Pour les embases mécanique.

REF	R.O. OEM		
RM92-858064QB1U6	92-858064QB1	1 L	6
RM92-858065QB1U2	92-858065QB1	9,5 L	2



RM92-858064QB1U6

RM92-858065QB1U2



new

Lubricante marino para transmisones de motores intraborda y fueraborda de los principales fabricantes, que requieren aceites con una calidad API GL 5. Consulte el manual de usuario antes de elegir el lubricante.

GL-5 synthetic oil of the highest quality for marine drives and IPS Oil recommended for the transmission of inboard and outboard engines of the main manufacturers that require API GL 5 quality oils. Read the user manual before choosing a lubricant.

Olio sintetico GL-5 di altissima qualità per s-drive, trasmissioni IPS e riduttori. Olio consigliato per trasmissioni entrobordo e fuoribordo dai principali produttori che richiedono oli di qualità API GL 5. Consultare il manuale d'uso prima di scegliere il lubrificante.

Huile Synthétique recommandé par les principaux fabricants conçu pour des transmissions de moteur inboard et hors-bord qui précisent d'une qualité API GL 5. N'hésitez pas à consulter le manuel d'utilisation avant de choisir votre lubrifiant



QUALITY LEVELS
API GL-5

REF		
REC80W90U6	1 L	6
REC80W90U3	5 L	3

RECLUBE

ACEITES SINTÉTICOS — SYNTHETIC OILS — OLIO SINTETICO — HUILES SYNTHÉTIQUES

Aceite sintético de alta calidad. Para colas de transmisión mecánica. Especialmente indicados para los motores de gran cilindrada o de uso frecuente. Reduce el grado de fricción y calentamiento. No se mezcla con el agua. No anula las garantías de los fabricantes.

Lower Unit Gear Lube for mechanical drives. A synthetic gear lube that protects high-performance lower units in extreme operating conditions. Highly recommended for all engines over 100 hp. Will not avoid manufacturers' warranties.

Olio sintetico di alta qualità. Per trasmissione meccanica. Indicato specialmente per motori di grande cilindrara o di uso frequente. Riduce il grado di attrito e riscaldamento. Non si mescola con l'acqua. Non annulla la garanzia del produttore.

Huile synthétique de haute qualité. Pour les embases mécanique. Particulièrement adapté pour les moteurs de grande cylindrée ou à usage fréquent. Réduit le degré de friction et d'échauffement. Elle ne se mélange pas à l'eau. N'annule pas les garanties du fabricant.

REF		
LUB11564U12	1 L	12
LUB11565	19 L	1

lubriMatic



LUB11564U12



LUB11565

ACEITE MINERALES — MINERAL GEAR OILS — OLIO MINERALE — HUILE MINÉRALE

Para colas de transmisión mecánica. Especialmente indicados para los motores de gran cilindrada o de uso frecuente.
Fabricado con aditivos especiales para proveer una máxima durabilidad e inhibidores de la corrosión para una mayor protección contra el óxido y la corrosión.

Lower Unit Gear Lube for mechanical drives. Lower Unit Gear Lube. Ideal for modern outboard and stern drive lower units.
Will not avoid manufacturers' warranties.

Per piedi poppieri a trasmissione meccanica. Indicato specialmente per motori di grande cilindrata o di uso frequente.
Fabbricato con additivi speciali per fornire una massima durata e impedire la corrosione per una maggiore protezione contro l'ossidazione e la corrosione.

Pour les embases mécanique. Particulièrement adapté pour les moteurs de grande cylindrée ou à usage fréquent.
Fabriqué avec des additifs spéciaux pour offrir une durabilité maximale et des inhibiteurs de corrosion pour une meilleure protection contre la rouille et la corrosion.

REF		
LUB11540U12	280 g	12
LUB11552U12	1 L	12
LUB11546	19 L	1

lubriMatic



LUB11540U12



LUB11552U12



LUB11546

KIT ACEITE COLAS

Kit para cambiar el aceite mineral de las colas OMC, Volvo, Mercruiser, Mercury y Mariner.

REF	
LUB11101	385 g

LubriMatic

LOWER UNIT LUBE KIT

Includes 2 tubes of high-viscosity lower unit gear lube.
For OMC, Volvo, Mercruiser, Mercury & Mariner drives.

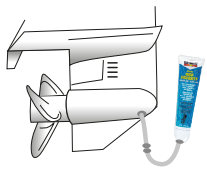

KIT OLIO PIEDI

Kit per cambiare l'olio minerale dei piedi poppieri OMC, Volvo, Mercruiser, Mercury e Mariner.

KIT D'HUILE D'EMBASE

Kit pour changer l'huile minérale des embases OMC, Volvo, Mercruiser, Mercury et Mariner etc...



GRASA MARINA. INSOLUBLE AL AGUA

Grasa marina semisintética con base de litio-calcio, de cuerpo espeso y color azul.
100% insoluble al agua, especialmente formulada para todo tipo de aplicaciones náuticas incluso prensaestopas y hélices plegables, gracias a la buena adhesión al metal.

MARINE GREASE. NON-WATER-SOLUBLE

Semi-synthetic marine grease with a lithium and calcium base, thick and blue.
100% non-water-soluble, especially formulated for all nautical uses, including cable glands and foldable propellers, thanks to good adherence to metal.

GRASSO MARINO. INSOLUBILE IN ACQUA

Grasso marino semisintetico a base di litio-calcio, di aspetto denso e di colore azzurro. 100% insolubile in acqua, specificamente formulato per applicazioni nautiche di tutti i tipi, compresi premistoppa ed eliche pieghevoli, grazie all'alta aderenza ai metalli.

GRAISSE MARINE INSOLUBLE A L'EAU

Graisse marine semi-synthétique à base de lithium-calcium, épais et bleu. 100% insoluble avec l'eau, spécialement conçu pour tout type d'application nautiques, même pour des presse-étoupes et les hélices pliables grâce à sa proprieté d'adhésion au métal.

new

REF		
RECGREU1	5 kg	1
RECGREU12	400 g	12

RECLUBE





Lubricante insoluble al agua, ideal para aplicaciones marinas. Excelente protección contra fricciones, óxido y corrosión.

Special calcium sulfonate complex, water insoluble formula ideal for marine applications.
Provides excellent corrosion protection under severe conditions caused by salt water and air.

Lubrificante insolubile all'acqua, ideale per applicazioni marine. Eccellente protezione contro l'attrito, l'ossido e la corrosione.

Lubrifiant insoluble dans l'eau, idéal pour les applications marines. Excellente protection contre le frottement, la rouille et la corrosion.

REF		PISTOLA GUN PISTOLA PISTOLET	
LUB11400	85g	RECT30190	4
LUB11402	400 g	RECT30201	1
LUB11406	280 g	LUB30197	1
LUB11407	13,5 kg		1
LUB11404	450 g		1

LubriMatic



LUB11400



LUB11402



LUB11406



LUB11407

LUB11404

GRASA DE LITIO | LITHIUM GREASE | GRASSO AL LITIO | GRAISSE DE LITHIUM

Grasa de litio con Teflón. Color blanco.

Heavy duty white litium grease with Teflon.

Grasso al litio con Teflón. Colore bianco.

Graisse au lithium avec téflon. Couleur blanche.

REF	
LUB11363	350 ml

LubriMatic



ACEITE TRIM / TILT | POWER TRIM & TILT FLUID | OLIO TRIM / TILT | HUILE DE TRIM/TILT

Proporciona la viscosidad y lubricación necesaria para asegurar el perfecto funcionamiento de la bomba alargando la vida de los retenes y juntas.

Formulated to provide viscosity and lubricity necessary to ensure proper pump performance and seal life.

Fornisce la viscosità e la lubrificazione necessaria per assicurare il perfetto funzionamento della pompa allungando la vita delle guarnizioni.

Elle fournit la viscosité et la lubrification nécessaires pour assurer le fonctionnement parfait de la pompe, prolonge la durée de vie des joints.joits.

REF		
LUB11578U12	280 g	12

LubriMatic



ACCESORIOS Y HERRAMIENTAS DE INSTALACIÓN | ACCESSORIES AND INSTALLATION TOOLS | ACCESSORI E ATTREZZI ISTALAZIONE | ACCESSOIRES ET OUTILS D'INSTALLATION

KIT PISTOLA + GRASA | MIDGET GREASE GUN KIT | KIT PISTOLA + GRASSO | KIT PISTOLET + GRAISSE

Kit compuesto de una pistola pequeña y muy versátil que permite la salida del tubo conector frontal o superior. Presión máxima 300 k/cm². Incluye un bloqueador para mantener el cartucho en posición y tubo de salida de 14 cm. Admite cartuchos de 3 onzas (85 g) o grasa a granel.

Marine corrosion control lubrication kit. Small, versatile gun allows for front or top pipe placement. Barrel takes 3 oz grease cartridge or can be bulk loaded. Develops up to 4,500 psi.

Kit composto da una pistola piccola e molto versatile che permette l'uscita del grasso dal tubo frontale o superiore. Pressione massima 300 k/cm². Include un blocco per tenere la cartuccia in posizione, il tubo è da 14 cm. Utilizza cartuccia da 85 gr o grasso sfuso.

Kit composé d'un petit pistolet très polyvalent qui permet la sortie du tube de connexion avant ou supérieur. Pression maximale 300 k / cm2. Il comprend un bloqueur pour maintenir la cartouche en position et un tube de sortie de 14 cm. Prend en charge des cartouches de 3 oz (85 g) ou de la graisse en vrac.

REF
RECT30190

RECmar



BOMBA DEPÓSITO — GREASECASE FILLER — POMPA OLIO — POMPE DE REMPLISSAGE

Para llenado de colas. Con válvula de ventilación para evitar derrames.

With check valve venting system to avoid overflow

Per mettere l'olio nei piedi poppier. Con valvola di sfiatto per evitare fuoriuscite.

Pour le remplissage des embases. Avec valve de ventilation pour éviter les déversements.

REF				
REC55133GF	Bomba depósito	Greasecase filler	Pompa olio	Pompe de remplissage
REC55133M	Adaptador métrico (excepto Suzuki)	Metric adaptor (excl. Suzuki)	Adattatore metrico (eccetto Suzuki)	Adaptateur métrique (sauf Suzuki)
REC55133S	Adaptador para Suzuki	Adaptor for Suzuki	Adattatore per Suzuki	Adaptateur Suzuki



REC55133M



REC55133S



PISTOLA DE GRASA — LEVER GREASE GUN — PISTOLE GRASSO — POMPE A GRAISSE

Incluye manguera curvada y conector standard. Ideal para engrasar crucetas, cables de dirección, cañas de motor fuerborda, piñones y cualquier otra parte del motor que precise engrase. Con visor para reserva. Se recarga sin necesidad de tubo.

Standard Lever grease gun. Includes curved pipe and std coupler. Ideal for greasing spreaders, steering wires, rods outboard engine, gear bearing and other parts of the engine that needs greasing. With Viewer for reservation. Will reload without tube.

Include tubo flessibile curvo e connettore standard. Ideale per ingrassare cavi dello sterzo, barre del motore fuorbordo, ingranaggi e qualsiasi altra parte del motore che abbia bisogno di lubrificazione. Con visora per la prenotazione. Si ricarica senza tubo.

Comprend un tuyau incurvé et un connecteur standard. Idéal pour graisser les traverses, les câbles de direction, les tiges de moteur entraîné, les pignons et toute autre partie du moteur qui a besoin d'être graissée. Avec viseur pour réservation. Il se recharge sans tube.

REF		
RECT30201	600 cc	16000 psi
LUB10212	Manguera 30 cm Hose 30 cm Tubo 30 cm Tuyau 30 cm	



LUB10212

RECT30201



Pistola para tubos de grasa. Incluye manguera flexible de 14 cm y adaptador standard.

All purpose gun operates handy squeeze tubes. Includes 2-11/16" pipe and plastic push-type coupler.

Pistola per tubi di grasso. Include tubo flessibile da 14 cm e adattatore standard.

Pistolet pour tubes de graisse. Comprend un tuyau flexible de 14 cm et un adaptateur standard.

REF
LUB30197



PISTOLA DE ACEITE — BOTTLE GREASE PUMP — PISTOLA OLIO — POMPE POUR HUILE

Pistola para acoplar en los envases de botella de 1 litro de LUB11552 y LUB11564. Se suministra con kit de adaptación con válvula anti-retorno.

Lower unit quart pump. Complete with metal threaded filler fitting.

Pistola da accoppiare a bottiglie da 1 L LUB11552 e LUB11564. Si vende con kit di accoppiamento con valvola anti-ritorno.

Pompe pour les bidons de 1 litre de LUB11552 et LUB11564. Livré avec kit d'adaptation avec clapet anti-retour.

REF
REC55005



KIT ENGRASADORES / METRIC GREASE FITTINGS / KIT LUBRIFICATORI / KIT GRAISSEURS

Kit compuesto por 8 engrasadores métricos de 6 mm (4 rectos, 2 de 45º y 2 de 90º).

Includes eight 6mm metric fittings:
4 straight, 2 of 45º and 2 of 90º.

Kit composto da 8 lubrificatori metrici da 6 mm (4 dritti, 2 da 45º e 2 da 90º).

Kit composé de 8 graisseurs métriques 6 mm (4 droits, 2 à 45º et 2 à 90º).

REF
LUB11957

LubriMatic



Kit de 4 engrasadores métricos de 6 mm de 90º.

Includes four 6 mm metric fittings of 90º.

Kit composto da 8 lubrificatori metrici da 6 mm da 90º.

Kit de 4 graisseurs métriques de 6 mm à 90º.

REF
RECT11958

RECmar



OREJERAS REDONDAS / MOTOR FLUSHER ROUND / CUFFIE LAVAGGIO ROTONDE / OREILLES RONDES

Tomas de agua para refrigeración de motores fueraborda y colas intra-fueraborda.

For use on most outboards and inboard/outboards engines with side water inlets.

Cuffie lavaggio per motori entro-fuoribordo e fuoribordo.

Sorties d'eau pour le refroidissement du moteur hors-bord et in-bord.





GOLDENSHIP

REF	
GS30350	1

USO PROFESIONAL
PROFESSIONAL
USO PROFESIONALE
USAGE PROFESSIONNEL

REF	
GS30351	1

OREJERAS CUADRADAS / MOTOR FLUSHER SQUARE / CUFFIE LAVAGGIO QUADRATE / OREILLES CARRÉES

Tomas de agua para refrigeración de motores fueraborda y colas intra-fueraborda.

For use on most outboards and inboard/outboards engines with side water inlets.

Cuffie lavaggio per motori entro-fuoribordo e fuoribordo.

Sorties d'eau pour le refroidissement du moteur hors-bord et in-bord.





GOLDENSHIP

REF	
GS30352	1

USO PROFESIONAL
PROFESSIONAL
USO PROFESIONALE
USAGE PROFESSIONNEL

REF	
GS30353	1

EXTRACTOR IMPULSORES / IMPELLER REMOVAL / ESTRATTORE GIRANTE / EXTRACTEUR DE TURBINE

Extractor para impulsores flexibles de bombas, motores fueraborda e interiores.

Flexible impeller removal tool, suitable for all marine flexible impellers of water pumps, outboard and inboard engines.

Estrattore per giranti di pompe di motori fuoribordo e entrobordo.

Extracteur pour turbines flexibles, moteurs hors-bord et in-bord.

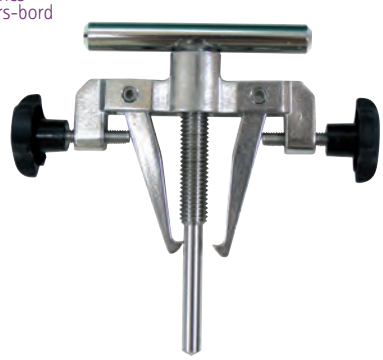

REF	
GS20198	Ø 65 mm 2-1/2"
GS20199	Ø 77 - 127 mm Ø 3" - 5"

GOLDENSHIP

EXTRACTOR COJINETES Y HÉLICES / PROP AND BEARING PULLER / ESTRATTORE CUSCINETTI E ELICHE / EXTRACTEUR DE ROULEMENT ET D'HELICE

Extractor de cojinetes y hélices, con patas. Para todos los cojinetes Mercruiser y la mayoría de las hélices.

Prop and bearing carrier puller. Capacity: 5 Tons (Min). For Mercruiser All Style Bearing Carrier and Most Props.

Estrattore cuscinetti e eliche. Per tutti i cuscinetti Mercruiser e la maggior parte delle eliche.

Extracteur de roulements et hélices. Pour tous les roulements Mercruiser et la plupart des hélices.

REF
REC90095

RECmar®



Para hélices y cojinetes antiguos
For prop and old style bearing carrier.
Per eliche e cuscinetti vecchi.
Pour hélices et roulements anciens



Para cojinetes modernos
For new style bearing carrier.
Per cuscinetti moderni.
Pour roulements modernes



FONENDOSCOPIO / SPARK GAP TESTER / FONENDOSCOPIO / PHONENDOSCOPE

Instrumento de precisión, resistente a golpes, detecta fácilmente ruidos en motores, cojinetes y otras partes móbiles. Incluye varilla de test, trompeta y auriculares.

Sensitive, shockproof instrument, easily locates noises in engines bearings and other moving parts. Includes aluminium alloy probe / needle, surgical PVC, rubber trumpet and plastic earphones.

Strumento di precisione, resistente a colpi, rileva facilmente rumori nel motore, nei cuscinetti e altre parti mobili. Include la tromba e gli auricolari.

Instrument de précision, résistant aux chocs, détecte facilement le bruit dans les moteurs, roulements et autres pièces mobiles. Comprend une tige d'essai, une trompette et des écouteurs.

REF
REC91-00003

RECmar®



EXTRACTOR PIÑONES Y COJINETES / UNIVERSAL PULLER PLATE / ESTRATTORE PIGNONE E CUSCINETTI / EXTRACTEUR DE PIGNON ET PALIER

REF	PIÑONES BEARINGS PIGNONE PIGNON
REC91-00001	30-50 mm / 1 1/4" ~ 2 1/4"
REC91-00002	50-75 mm / 2 1/4" ~ 3 1/2"
REC91-37241	75-105 mm / 3" ~ 4 1/2"

RECmar®



LLAVE DINAMOMÉTRICA / TORQUE WRENCH / CHIAVE DINAMOMETRICA / CLÉ DYNAMOMÉTRIQUE

Con escala en 20 - 150 pies/libras y 33.9 - 210 N.m
Incrementos cada 1 pie/libra y 1,4 N.m
Dado de conexión: 1/2"

Scale in 20-150 ft-lbs. 33.9 - 210 N.m
Increases each 1 ft-lbs. & 1,4 N.m
1/2" drive.

Con scala da 20 - 150 piedi /libra e 33.9 - 210 N.m
Incremento di 1 pie / libra e 1,4 N.m
Dado attacco: 1/2"

Avec échelle à 20 - 150 pieds / livres et 33,9 - 210 N.m
Incrémente tous les 1 pied / livre et 1,4 N.m
Embout de connexion: 1/2 "

REF	
CRA944595	518 x 35 x40 mm



LLAVE FRENO VOLANTE PARA FUERABORDAS / FLYWHEEL HOLDER PER OUTBOARDS / CHIAVE FRENO VOLANTE PER FUORIBORDO / CLÉ FREIN DE VOLANT POUR HORS-BORD

REF
REC5515100

RECmar®



CHISPÓMETRO — SPARK GAP TESTER — SCINTILLOMETRO — CONTRÔLEUR D'ALLUMAGE

Se puede comprobar la chispa con el motor en funcionamiento.

Good for checking spark on running engine.

Si può provare la scintilla con il motore in funzione.

L'étincelle peut être vérifiée avec le moteur en marche.

REF	CYL
REC5119766	8
REC004	1

RECmar

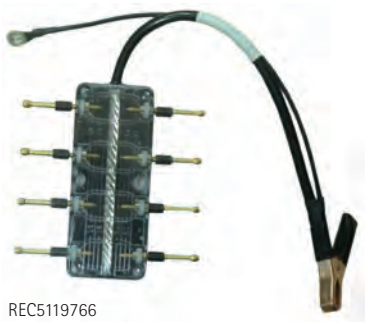

REC5119766



REC004

KIT EXTRACTOR DE POLEAS — PULLER TOOL KIT — KIT ESTRATTORE PULEGGE — KIT EXTRACTEUR DE POULIE

Extractor de polea contrapesos. Contiene 5 juegos de tornillos de diferentes medidas.

Harmonic ballancer puller. 5 sets of screws are provided.

Estrattore di pulegge. Contiene 5 kit di viti di differenti misure.

Extracteur de poulie. Il contient 5 jeux de vis de différentes tailles.

REF
SSP4600

RECmar



Kit para extraer e instalar poleas. Para uso en todos los motores Ford, GM y Chrysler. También puede utilizarse para volantes de dirección y poleas en general. Esfuerzo máximo recomendado: 20 kg.

Harmonic ballancer puller and installation tool kit. Use on all Ford, GM & Chrysler engines. Heavy duty tool. Can also be used for steering wheels and pulleys

Kit per estrarre e installare pulegge in tutti i motori Ford, GM e Chrysler. Si può utilizzare per volani di direzione e pulegge in generale. Carico massimo: 20 kg.

Kit pour extraire et installer les poulies. À utiliser sur tous les moteurs Ford, GM et Chrysler. Il peut également être utilisé pour les volants et les poulies en général. Effort maximal recommandé: 20 kg.

REF
SSPHBP100K

RECmar





EXTRACTOR FILTROS — OIL FILTER WRENCH — ESTRATTORE FILTRI — CLÉ À FILTRE

REF	PARA FILTROS FILTERS PER FILTRI POUR FILTRES
REC70720	65 - 110 mm

RECmar

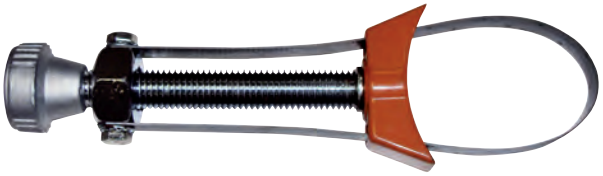

KIT LLAVE HÉLICE — PROP WRENCH KIT — KIT CHIAVE ELICHA — KIT CLÉ À HÉLICE

Mercury, Mariner, Force V4 & V6, Mercruiser, Honda BF75-BF130

REF	R.O. OEM
REC91-859046Q4	MC 91-859046Q4 HONDA 89-89206-ZW7-000AH

RECmar



JUEGO DE MACHOS | TAP AND DIE SET | FILIERA | KIT TARAUDS ET FILIÈRES

Garantía de por vida. | Lifetime warranty. | Garantita a vita. | Garantie à vie

REF	
CRA952343	Pulgadas Inches Pollici Pouce
CRA952344	Métricos Metrical Metrico Métrique



EXTRACTOR TAPONES DE TRIM | TRIM PLUGS EXTRACTOR | ESTRATTORE PER TAPPI DI TRIM | EXTRACTEUR DE BOUCHON DE TRIM

new

REF	
RECTOOLTRIMKIT	RECTOOLTRIM1 + RECTOOLTRIM2 + RECTOOLTRIM 3



REF	ÚTIL TOOL ATTREZZO UTILE				(A)
RECTOOLTRIM1	1/2"	+	RECPIN4	+ RECPIN4.5	38 mm
RECTOOLTRIM2	1/2"	+	RECPIN4	+ RECPIN4.5	32 mm
RECTOOLTRIM3	1/2"	+	RECPIN6		35 mm



KITS DE RECAMBIO
SPARE KITS
KIT DI RICAMBIO
KITS DE RECHANGE



REF		PARA FOR PER POUR
RECPIN4	3 PIN x 4 mm	RECTOOLTRIM1 RECTOOLTRIM1
RECPIN4.5	3 PIN x 4.5 mm	RECTOOLTRIM1
RECPIN6	3 PIN x 6 mm	RECTOOLTRIM3

Los pines de repuesto no tienen garantía.
Replacement pins are not guaranteed.
I perni di ricambio non sono garantiti.
Les broches de remplacement ne sont pas garanties.

TRIM PISTON	TILT PISTON		HP	
RECTOOLTRIM1		Yamaha	F25 - F40	
RECTOOLTRIM2	RECTOOLTRIM3	Yamaha	F115	2000-14
RECTOOLTRIM2	RECTOOLTRIM3	Yamaha	F150	2004-10
RECTOOLTRIM2	RECTOOLTRIM1	Yamaha	F150	2011+
RECTOOLTRIM2	RECTOOLTRIM3	Yamaha	F175 - F200 (2.8L)	
RECTOOLTRIM1	RECTOOLTRIM1	Yamaha	F200 - F250 (3.3L)	
RECTOOLTRIM1	RECTOOLTRIM1	Yamaha	F225 - F300 (4.2L)	
RECTOOLTRIM2	RECTOOLTRIM3	Yamaha	F350	
RECTOOLTRIM2		Yamaha	F425	
RECTOOLTRIM2		Yamaha	55-90 (2-Strokes)	1994+
RECTOOLTRIM2	RECTOOLTRIM3	Yamaha	115-200 + VMAX	
RECTOOLTRIM1	RECTOOLTRIM1	Yamaha	225 (2-Strokes)	
RECTOOLTRIM2	RECTOOLTRIM3	Suzuki	DF115 - DF300	
RECTOOLTRIM2	RECTOOLTRIM3	Evinrude	115 - 300 ETEC	
RECTOOLTRIM3		Johnson Evinrude	25 - 50 (2 Strokes)	1994-04
RECTOOLTRIM2	RECTOOLTRIM3	Johnson Evinrude	60 - 250 (2 Strokes)	1982-06
RECTOOLTRIM2	RECTOOLTRIM3	Honda	75 - 225	1997+
RECTOOLTRIM1		Seastar Steering		
RECTOOLTRIM2		Volvo Penta Trim Cylinders		
RECTOOLTRIM1		Mercruiser Alpha One & Bravo Trim Cylinders		

JUEGO DE LLAVES | MECHANICAL TOOL SET | CASSETTA ATTREZZI | MALETTE D'OUTILLAGE

154 llaves en métrico y en pulgadas para un completo trabajo en motores.
Garantía de por vida.

154 pcs. Mechanics tool set in metric & inches. Lifetime warranty.

154 chiavi metriche e in pollici per un lavoro completo nel motore. Garantita a vita.

154 clés, métriques et en pouces pour un travail complet sur le moteur. Garantie à vie

REF
CRA935154



HERRAMIENTA AROS-PISTONES / RING COMPRESOR KIT / KIT FASCE-PISTONI / OUTIL SEGMENTS ET PISTONS

Kit herramientas para la instalación de aros y pistones. Incluye 6 bandas de 7 a 11 cm.

Ring compressor kit for pistons. Includes 6 band 2-7/8" - 4-3/8"

Kit per montare le fasce dei pistoni. Include 6 bande da 7 a 11 cm.

Kit d'outils pour l'installation des segments et pistons. Il comprend 6 colliers de 7 à 11 cm.

REF
SSP4213

RECmar®



REF	PARA AROS Y PISTONES RING COMPRESSOR PISTONS PER FASCE E PISTONI POUR SEGMENTS ET PISTONS
SSP4206	127 mm Ø / 2-1/8" - 5" Ø
SSP4207	178 mm Ø / 3-1/2" - 7" Ø

RECmar®



KIT ALARGADOR CABLE BUJÍAS / EXTENSION WIRES / KIT PROLUNGA CAVI CANDELE / KIT EXTENSION DE FAISCEAU DE BOUGIE

REF		
REC5119902	18 cm	4
REC5119903	60 cm	4

RECmar®



REC5119902



REC5119903

PULIDORA DE CILINDROS / ENGINE CYLINDER HONE / PULITRICE CILINDRI / RODOIR DE CYLINDRE

Para pulir los cilindros de los bloques.
Garantizada de por vida.

Quikly removes the glaze from engine cylinder walls before installing new piston rings.
Lifetime warranty.

Per pulire i cilindri dei blocchi.
Garantita a vita.

Poli les cylindres des blocs moteur.
Garanti à vie.

REF
CRA904633



KIT DE 3 PIEDRAS PARA RECAMBIO DE LA PULIDORA
3 PIECES SPARE PART FOR HONE
KIT DA 3 SPAZZOLE DI RICAMBIO PER LA PULITRICE
KIT DE 3 PIERRES DE REMPLACEMENT POUR LE RODOIR

REF
CRA946331

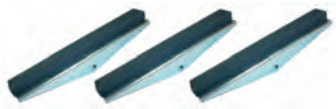

HERRAMIENTA VÁLVULA / VALVE SPRING COMPRESSOR / ATTREZZO VALVOLE / LÈVE SOUPAPE

Herramienta para el montaje y desmontaje de válvulas.
Incluye tres juegos de mordazas.

Manual valve spring compressor.
Universal.
Includes 3 jaw sets.

Attrezzo per montare e smontare le valvole.
Include 3 kit per misure differenti.

Outil pour monter et démonter les vannes.
Il comprend trois jeux de mâchoires.

REF
SSP4265

RECmar®



VACUÓMETRO DOBLE FUNCIÓN / PRESSURE / VACUUM TESTER / VACUOMETRO DOPPIA FUNZIONE / VACUOMÈTRE DOUBLE FONCTION

Presión y vacío. Ideal para comprobar las colas.

Combination unit that does pressure and vacuum testing in one units. Recommended to test drives.

Pressione e sottovuoto. Ideale per il controllo dei piedi.

Pression et vide. Idéal pour vérifier les embases.



REF
REC55134

RECmar

COMPRESÍMETRO / COMPRESSION TESTER KIT / MANOMETRO / COMPRESSIOMÈTRE

Para motores gasolina con bases GM o Ford.

For gas engines with GM or Ford base.

Per motori benzina con base GM e Ford.

Pour les moteurs à essence bases GM ou Ford.



REF
CRA902171

PISTOLA PUESTA A PUNTO / TIMING LIGHT / PISTOLA MESSA A PUNTO / LAMPE STROBOSCOPIQUE

Con regulador de avance.

0-60 advance scale.

Con regolatore avanzamento.

Avec régulateur d'avance.



REF
CRA921023

INTERRUPTOR ARRANQUE / REMOTE STARTER / INTERRUTTORE AVVIAMENTO / INTERRUPTEUR DE DÉMARRAGE A DISTANCE



REF
CRA902175

MULTITESTER DIGITAL

Multímetro ecológico autorango con símbolos de función en pantalla, energía mediante generador manual incorporado, también puede funcionar con batería. Incorpora manivela plegable para cargar el multímetro, 20 segundos de manivela generan suficiente carga para trabajar 10 min (sin batería).
Equipo recomendado para mantenimiento, sector naútico (barcos).
Multímetro digital de 3 5/6 díg. (6000)
Medidas de tensión CC / CA
Medidas de corriente CC / CA
Medidas de resistencia / continuidad
Medidas de capacidades / frecuencias
Medidas / Prueba de diodos
Detecta tensión AC o DC automáticamente
Retención de lectura Hold
Selección de rango: auto y manual
Función de autoapagado (3min)
Pantalla grande 46x45mm

DIGITAL MULTITESTER

Ecological autoranging multimeter with function panel on screen, hand power generator, it can also run on battery. Includes folding crank to charge the meter, 20-second crank generate enough charge to work 10 min (without battery).
Recommended equipment for maintenance, nautical sector (boats).
Digital Multimeter 3 5/6 Digit. (6000)
Measures voltage DC / AC
Measures DC / AC current
Measures resistance / continuity
Measures capacity / frequency
Measures / Diode Test
Detects AC or DC voltage automatically
Hold reading retention
Range Selection: auto and manual
Auto Off function (3min)
Large display 46x45mm

MULTITESTER DIGITALE

Multítester ecologico con simboli di funzione nello schermo, energia mediante generatore manuale incorporato, funziona anche con batteria.
Manovella piegabile incorporata, per ricaricare il multitester, 20 secondi di manovella. In genere per lavorare è sufficiente caricarlo per 10 minuti senza batteria.
Strumento raccomandato per utilizzo nel settore nautico (barche).
Multitester digitale 3 5/6 díg. (6000)
Misure di tensione CC / CA
Misure di corrente CC / CA
Misure di resistenza / continuità
Misure di capacità / frequenza
Misure / Prova di diodi
Rileva la tensione AC o DC automaticamente
Ritenzione di lettura Hold
Selezione di gamma: auto e manuale
Accensione automatica (3min)
Display grande 46x45mm

MULTIMÈTRE DIGITAL

Multimètre écologique avec symboles de fonction sur l'écran, alimentation au moyen d'un générateur manuel intégré, il peut également fonctionner avec une batterie. Il intègre une manivelle pliante pour charger le multimètre, 20 secondes de manivelle génèrent suffisamment de charge pour fonctionner 10 min (sans batterie).
Matériel recommandé pour la maintenance, secteur nautique (bateaux).
Multimètre digital 3 5/6 chiffres. (6000)
Mesures de tension DC / AC
Mesures de courant DC / AC
Mesures de résistance / continuité
Mesures de capacité / fréquence
Mesures / Test de diode
Détecte automatiquement la tension alternative ou continue
Maintien la rétention de lecture
Sélection de gamme: automatique et manuelle
Fonction d'arrêt automatique (3min)
Grand écran 46x45mm



REF
TEC145

VACUÓMETRO SINCRONIZADOR

Vacuómetro, sincronizador de admisión, analizador dinámico de fugas y tacómetro. Impermeable e insumergible con una funda especial.
Posee mayor estabilidad que los indicadores analógicos o que cualquier otro sistema. Se autorregula a los cambios de presión barométrica.
Alimentación con corriente continua de 12 V, se puede utilizar con cualquier batería de embarcación o vehículo o con un adaptador de entrada a la red (230V/12V).
Indicadores LED de batería descargada y de alimentación no adecuada.
Contiene: Cable y pinzas por alimentación 12V, tubos de santoprene de conexión, 2 juegos de adaptadores flexi-rígidos, caja de almacenaje.

VACUUMMATE ALLWEATHER

Vacuumate allweather, 4 x carb/throttle valve.
Shock resistant composite-moulded polyurethane and polycarbonate casing for maximum strength and resilience.
Self-calibrates for barometric changes.
Solid state sensors are drop proof. It has internal rechargeable 1,5Ah 7,2V NiMH batteries providing up to 6 hours autonomy. Battery power is conserved by auto-switch-off 5 minutes after last being used and LEDs use full power only when measurements are taken.
Kit includes custom travel case, battery cord-set, T-connector & 2 full sets of unique flexi-rigid.

VACUOMETRO

Vacuometro, sincronizzatore d'aspirazione, analizzatore dinamico di fughe e tachimetro. Impermeabile e immergibile con una custodia speciale.
Possiede maggiore sensibilità degli indicatori analogici o con altri sistemi.
Si autoregola al cambio di pressione barometrica.
Alimentazione con corrente continua da 12 V, si può utilizzare con qualsiasi batteria per imbarcazioni, veicoli e con un adattatore di entrata da 230V/12V.
Indictore LED di batteria scarica e di alimentazione non corretta. Contiene: Cavi e pinze per alimentazione 12V, tubi di santoprene di connessine, 2 adattatori flexi-rígidi, scatola per conservare l'attrezzo.

VACUOMETRE SYNCHRONISEUR

VacuumMate affiche la pression d'admission individuelle de 4 carburateurs séparés (ou boîtier papillons à injection de carburant). Imperméable et insubmersible avec une housse spéciale.
Il a une plus grande stabilité que les indicateurs analogiques ou tout autre système. Il autorégule les changements de pression barométrique.
Alimentation 12 V DC, utilisable avec n'importe quelle batterie de bateau ou de véhicule ou avec un adaptateur secteur (230V / 12V).
Indicateurs LED de batterie déchargée et de puissance insuffisante.
Contient: câble d'alimentation 12V et pinces, tubes de connexion, 2 jeux d'adaptateurs flexi-rigides, boîte de rangement.



REF
TCMVRM5

PINZA AMPERIMÉTRICA

Tenaza autorango y multifunción para AC y DC.
Diámetro maxilar: 30 mm
Display de 3 3/4 dígitos. Máx. 3999.
Realiza medidas en: AC/DC: 40A/400A
Precisión: +/-(1,9% + 5 d. en AC)
Precisión: +/-(2,5% +10 d. en DC)
Ancho de banda: 50Hz - 500Hz (AC)
Resolución:AC/DC 10mA. 100mV.
Resistencia: 400 Ohms.

AMPERIC NIPPER

Iron autoranging and multifunction for AC and DC.
Jaw diameter: 30 mm
Display of 3 3/4 digit. Max. 3999.
Measurements in: AC/DC current: 40A/400A
Precision: +/-(1,9% + 5 d. en AC)
Precision: +/-(2,5% +10 d. en DC)
Bandwidth: 50 Hz - 500 Hz (AC)
Resolution: AC/DC 10mA. 100mV.
Resistence: 400 Ohms.

PINZA AMPEROMETRICA

Pinza multifunzione per AC e DC.
Diametro max: 30 mm.
Display da 3 3/4 digitale. Máx. 3999.
Può realizzare misurazioni in:
Corrente AC/DC: 40A/400A.
Precisione: +/-(1,9% + 5 d. en AC)
Precisione: +/-(2,5% +10 d. en DC
Banda larga: 50Hz - 500Hz (AC)
Risoluzione:AC/DC 10mA. 100mV.
Resistenza: 400 Ohms.

PINCE AMPÈREMÉTRIQUE

Pince ampèremétrique multifonction pour AC et DC.
Diamètre maxi: 30 mm
Affichage de 3 3/4 chiffres. Max. 3999
Effectue des mesures en: AC / DC: 40A / 400A
Précision: +/- (1,9% + 5 jours en CA)
Précision: +/- (2,5% +10 d. En DC)
Bande passante: 50 Hz - 500 Hz (AC)
Résolution: AC / DC 10mA. 100mV
Résistance: 400 Ohms

REF
TEC218



TERMÓMETRO MULTIFUNCIONAL

Termómetro multifunción digital, por rayos infrarrojos.
Emisividad fija: 0,95 Rango: -20ºC + 320ºC.
Lectura en grados centígrados y farenheit.
Precisión +/- 2%. Resolución: 1ºC
Distancia óptima de medida: de 6 a 60 cm.
Retención de la última lectura.
Autoapagado.

INFRARED THERMOMETER

Multifunction digital infrared thermometer.
Fixed emissivity: 0.95 range: - 20 °C 320 °C.
Reading in Celsius and Fahrenheit.
Precision +/-2%. Resolution: 1ºC
Distancia optimal measurement: 6 to 60 cm.
Retention of the last reading.
Auto Off function.

TERMOMETRO MULTIFUNZIONALE

Termometro multifunzione digitale, a infrarrossi.
Misurazione: 0,95 Rango: -20ºC + 320ºC.
Lettura in gradi centigradi e farenheit.
Precisione +/- 2%. Risoluzione: 1ºC
Distanza ottimale di misurazione: da 6 a 60 cm.
Memoria dell'ultima lettura.
Autospegnimento.

THERMOMÈTRE MULTIFONCTIONNEL

Thermomètre multifonction numérique, par rayons infrarouges.
Mesure fixe: 0,95 Plage: -20ºC + 320ºC.
Lecture en degrés Celsius et farenheit.
Précision +/- 2%. Résolution: 1ºC
Distance de mesure optimale: de 6 à 60 cm.
Conservation de la dernière lecture.
Arrêt automatique

REF
TECDT8580



ESTABILIZADORES, ELEVADORES Y SEGURIDAD

HYDROFOIL STABILIZER AND SECURITY

STABILIZZATORI, ASCENSORI E SICUREZZA

STABILISATEURS, POWER TRIM-LIFT ET SECURITE

ALETAS ESTATILIZADORAS

Aletas para acoplar a la placa de cavitación de los motores fueraborda y colas intra-fueraborda. Se obtiene el planeo en menor tiempo. Elimina la cavitación. Mejora la sustentación. Permite mayor estabilidad y ahorro de combustible.

HYDROFOIL STABILIZER

Gives outboards and sterndrives a performance boost. Wipes out cavitation. On plane in less time. Saves fuel. Delivers true stabilization.

ALETTE

Alette da installare nei motori fuoribordo o nei piedi entro-fuoribordo. Planata in minor tempo. Elimina la cavitazione. Migliora la stabilità e riduce il consumo del carburante.

HYDROFOIL

Hydrofoil à fixer sur la plaque de cavitation des moteurs hors-bord et les embases. Le déjaugeage met moins de temps. Elimine la cavitation. Permet une plus grande stabilité et économise de carburant.

REF		(cm)
SRXPIJR	2,5 HP - 40 HP	18,50
SRXPI	40 HP +	18,50

StingRay



SRXPIJR



SRXPI

Diseño de montaje SIN AGUJEROS.

NO-DRILL mounting design.

Montaggio senza fori.

Conception de montage SANS TROUS.

REF		(cm)
SRSF	40 HP - 300 HP	18,50

StingRay





Diseño de montaje SIN AGUJEROS
Perfil hidrodinámico pulido
Empuje mejorado
Canalización del chorro de agua

NO-DRILL mounting design.
Sleeker hydrodynamic profile.
Captive Prop-Wash Resulting In
Improved Thrust
Fastest Hole Shot

Montaggio senza fori.
Profilo idrodinamico.
Spinta migliorata.
Canalizzazione del getto dell'acqua.

Conception de montage SANS TROUS
Profil hydrodynamique poli
Poussée améliorée
Canalisation par jet d'eau

REF		(cm)
SRXRIIIJR.	2,5 HP - 75 HP	18,50
SRXRIII	75 HP +	18,50

StingRay

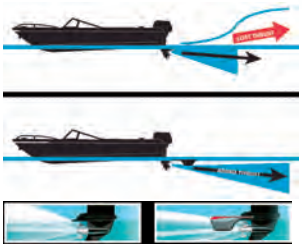





REF		(cm)
SRPRO1	40 HP - 300 HP	19,55



POWER TRIM-LIFT

Soporte con kit de Power Trim y Tilt.
Fabricado en extrusión de aluminio con tornillos de acero inox.
El motor electro-hidráulico de 3500kg de empuje se encuentra dentro de un contenedor para una mayor protección.

Electric hydraulic Tilt & Trim with a rated thrust of 7800 lbs.
Made with extruded aluminum and stainless steel fasteners.

Supporto con kit Power Trim e Tilt.
Fabbricato in alluminio con viti in acciaio inox.
Il motore elettroidraulico ha una spinta da 3500kg si trova all'interno di un contenitore per una maggior protezione.

Prise en charge avec le kit Power Trim et Tilt.
Fabriqué en aluminium extrudé avec des vis en acier inoxydable.
Le moteur de poussée électro-hydraulique de 3500 kg est à l'intérieur d'un boîtier pour une protection supplémentaire.

				CMC13002Q	CMC13001Q
Fuerabordas	Outboards	Fuoribordo	Hors-bord	-130 HP	-130 HP
Recorrido Trim	Trim travel	Escursione Trim	Angle de Trim	20°	20°
Recorrido Tilt	Tilt travel	Escursione Tilt	Angle de Tilt	90°	90°
Alimentación	Operation	Alimentazione	Alimentation	12 V	12 V
Reloj indicador	Lift gauge	Indicatore trim	Indicateur de trim		✔
Separación del espejo	Set-Back from transom	Specchio di poppa	Recul de traverse	152 mm 6"	152 mm 6"

CMC





Soporte con kit de Power Trim y Tilt.
Fabricado en extrusión de aluminio con tornillos de acero inox.
El motor electro-hidráulico de 3500 kg de empuje se encuentra dentro de un contenedor para una mayor protección.

Electric hydraulic Tilt & Trim with a rated thrust of 7800 lbs.
Made with extruded aluminum and stainless steel fasteners.

Supporto con kit Power Trim e Tilt.
Fabbricato in alluminio con viti in acciaio inox.
Il motore elettroidraulico ha una spinta di 3500kg e si trova all'interno di un contenitore per una maggior protezione.

Prise en charge avec le kit Power Trim et Tilt.
Fabriqué aluminium extrudé avec des vis en acier inoxydable.
Le moteur électro-hydraulique à une poussée de 3500 kg il est à l'intérieur d'un boîtier pour une protection supplémentaire.

				CMC52100D
Fuerabordas	Outboards	Fuoribordo	Hors-bord	-35 HP
Recorrido Trim	Trim Travel	Escursione Trim	Angle de Trim	84°
Recorrido Tilt	Tilt travel	Escursione Tilt	Angle de Tilt	
Alimentación	Operation	Alimentazione	Alimentation	12 V
Separación del espejo	Set-Back from transom	Specchio di poppa	Recul de traverse	140 mm 5 1/2"

CMC





POWER LIFT

Soporte con kit elevador vertical.
Fabricado en extrusión de aluminio con tornillos de acero inox.
El motor electro-hidráulico de 3500 kg de empuje se encuentra dentro de un contenedor para una mayor protección.
Tornillos de 3/4" de acero inoxidable, con tuercas de aleación de aluminio y bronce resistentes a los choques y corrosión.

Electric hydraulic power lift transom jack with a rated thrust of 7800 lbs.
Made of 1/2" 6061 T6 alloy aluminum extrusions and stainless steel fasteners.
Totally waterproof electro-hydraulic power lift transom jack with a rated thrust of 7800 lbs.

Supporto con kit elevatore verticale.
Fabbricato in alluminio con viti in acciaio inox.
Il motore elettroidraulico ha una spinta da 3500kg e si trova all'interno di un contenitore per una maggior protezione.
Viti da 3/4" in acciaio inox, con dadi in alluminio e bronzo resistenti alla corrosione.

Support avec kit de levage vertical.
Fabriqué en aluminium extrudé avec des vis en acier inoxydable.
Le moteur électro-hydraulique à poussée de 3500 kg est à l'intérieur d'un boîtier pour une protection supplémentaire.
Vis 3/4 "en acier inoxydable, avec écrous en alliage d'aluminium et de bronze résistant aux chocs et à la corrosion.

				CMC65001Q
Fuerabordas	Outboards	Fuoribordo	Hors-bord	V6
Recorrido vertical	Vertical travel	Lavoro verticale	Relevage vertical	125 mm / 5"
Alimentación	Operation	Alimentazione	Alimentation	12V
Dimensiones	Dimensions	Dimensioni	Les dimensions	460 x 420 mm 18 1/8" x 16 1/2"
Reloj indicador	Lift gauge	Indicatore trim	Indicateur de Trim	✔
Separación del espejo	Set-Back from transom	Specchio di poppa	Recul de traverse	140 mm / 5 1/2"





				CMC61001Q
Reloj indicador	Lift gauge	Indicatore trim	Indicateur de Trim	✔
Separación del espejo	Set-Back from transom	Specchio di poppa	Recul de traverse	254 mm / 10"





V-8
300 HP

new

				CMC65501
Fuerabordas	Outboards	Fuoribordo	Hors-bord	V8 300HP
Reloj indicador	Lift gauge	Indicatore trim	Indicateur de Trim	✔
Separación del espejo	Set-Back from transom	Specchio di poppa	Recul de traverse	140 mm 5-1/2"

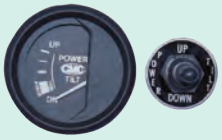



Soporte con kit elevador vertical.
Fabricado en extrusión de aluminio con tornillos de acero inox. de 3/4".

Electric hydraulic power lift transom jack.
Made with extruded aluminum and stainless steel fasteners.
Totally waterproof.

Supporto con kit elevatore verticale.
Fabbricato in alluminio con viti in acciaio inox da 3/4".

Support avec kit de levage vertical.
Fabriqué en aluminium extrudé avec des vis en acier inoxydable. 3/4 '.

				THAHJM-4DP
Fuerabordas	Outboards	Fuoribordo	Hors-bord	75 HP
Recorrido vertical	Vertical travel	Lavoro verticale	Relevage vertical	127 mm / 5"
Alimentación	Operation	Alimentazione	Alimentation	12 V
Reloj indicador	Lift gauge	Indicatore trim	Indicateur de Trim	✔
Separación del espejo	Set-Back from transom	Specchio di poppa	Recul de traverse	37 x 30 cm 14 5/8" x 11 1/2"





ADAPTADORES. POWER TRIM-LIFT / BACK SPACERS. POWER TRIM-LIFT / ADATTATORI. POWER TRIM-LIFT / ADAPTATEURS POWER TRIM-LIFT

Par de cuñas de 2º inclinación para espejo de popa.

Pair of 2 degrees wedge for the transom.

Piastre per lo specchio di poppa inclinate di 2°

Paire de cales avec 2ème inclinaison pour tableau arrière.

REF
CMC20122Q



Kit de adaptadores para la instalación de motores con palomillas.

Adaptors kit for motors mounted with transom clamps.

Kit per l'installazione di motori con chiusura con galletti.

Kit d'adaptateur pour l'installation du moteur.

REF
CMC13022Q



ADAPTADORES. POWER LIFT / BACK SPACERS. POWER LIFT / ADATTATORI. POWER LIFT / ADAPTATEURS POWER LIFT

Kit de adaptadores para motores de 75 HP.

Clampon motor adapter 75 HP.

Kit adattatori per motori 75 HP

Kit adaptateur pour moteurs 75 CV.

REF
THAHJM-CMADP



ALARGO BARRA FUERABORDA / EXTENSION HANDLE OUTBOARD / PROLUNGA PER FUORIBORDO / RALLONGE DE BARRE FRANCHE POUR HB

Prolongador de caña con pulsador de paro, para motores fueraborda. Fabricado en aluminio anodizado y maneta de plástico.

With push-button to switch-off the engine. Made of anodized aluminum and plastic handle.

Prolunga per fuoribordo, fabbricato in alluminio anodizzato e impugnatura in plastica.

Rallonge de barre franche avec bouton d'arrêt, pour moteurs hors-bord. Fabriqué en aluminium anodisé et poignée en plastique.

REF	(cm)	
GS73135	70	Fijo | Fixed | Fisso | Fixe
GS73136	60 - 100	Telescópico | Telescopic | Telescopico | Télescopique

GOLDENSHIP



PROTECTOR DE HÉLICES / PROPELLER PROTECTOR / PROTETTORI ELICHE / PROTECTION D'HÉLICE

Mejora el control direccional y aumentando la eficiencia de la hélice. Fabricado en polipropileno de alto impacto.
NOTA: Todos los motores «Big Foot» y de arrastre requieren la medida superior. Velocidad Máx: 30 nudos

Manufactured in high impact polypropylene. Better control in directional force. Increase the propeller efficiency.
NOTE: All hp's with «Big Foot» and High Thrust applications require next size up.
Max. Speed: 30 knots

Migliora il controllo direzionale e aumentando l'efficenza delle eliche. Prodotto in polipropilene di alta qualità.

NOTA: Tutti i motori «Big Foot» a alta spinta richiedono la referenza superiore.
Velocità Mas.: 30 nodi

Améliore le contrôle directionnel et augmente l'efficacité de l'hélice. Fabriqué en polypropylène résistant aux chocs.

REMARQUE: Tous les moteurs "Big Foot" et à forte poussée nécessitent la taille supérieure. Vitesse maximale: 30 nœuds

REF		Ø INT
REC5-9.8	5 - 9 HP	9"
REC9.9-20	9.9 - 20 HP	9"
REC25-35	25 - 35 HP	11"
REC40-65	40 - 65 HP	13"
REC70-100	70 - 100 HP	14"
REC110-230	110 - 230 HP	16"

GOLDENSHIP



RECAMBIOS MARINOS

ANTI-ROBO

Para motores fueraborda. Fabricado en acero inox. de 3 mm con candado de latón con 2 llaves.

REF	
GS73138	240 mm
GS73139	320 mm

GOLDENSHIP

ANTI THEFT

Manufactured in 3 mm stainless steel pipe. Provided with a padlock in brass with 2 keys.



ANTI-FURTO

Per motori fuoribordo. Prodotto in acciaio inox da 3 mm con luchetto in ottone con 2 chiavi.

ANTIVOL

Pour les moteurs hors-bord. Fabriqué en acier inoxydable. 3 mm avec serrure en laiton livré avec 2 clés.

ARNÉS FUERABORDA

Confeccionado con cincha sintética. Una sola medida se ajusta para fueraborda de 2 a 15 HP.

REF
GS73069

GOLDENSHIP



HOISTING HARNESS

Outboard hoisting harness. One size works on virtually all 2 to 15 HP outboards.

IMBRAGATURA FUORIBORDO

Confezionato con cinghia sintetica. Una sola misura, si regola per i fuoribordo da 2 a 15 HP.

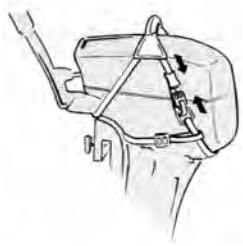

HARNAIS HORS-BORD

Fabriqué dans une sangle synthétique. Une seule taille à ajustée pour les moteurs hors-bord de 2 à 15 CV.

FUNDAS PARA FUERABORDA

Para motores fueraborda de 2 y 4 tiempos. Confeccionadas en tejido de poliéster de 320 g/m2. Impermeabilizado, transpirable. Costuras reforzadas. Color gris claro.

REF		A	B	C
OCEMA0741	-15 hp	32 cm	27 cm	50 cm
OCEMA0742	15-30 hp	40 cm	30 cm	56 cm
OCEMA0743	30-60 hp	49 cm	36 cm	62 cm
OCEMA0744	60-100 hp	53 cm	40 cm	68 cm
OCEMA0745	100-150 hp	58 cm	46 cm	74 cm
OCEMA0746	175-250 hp	60 cm	50 cm	82 cm

OCEANSOUTH

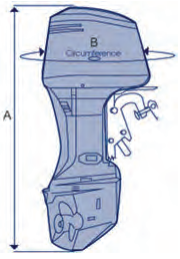

OUTBOARD COVERS

For outboard engines 2 & 4 stoke. Manufactured in 320 gsm polyester canvas. Weather proof, breathable. Reinforzed top stitched seams. Grey color.

COPERTURA FUORIBORDO

Per motori fuoribordo di 2 e 4 tempi. Confezionato in tessuto di poliestere da 320 g/m². Impermeabile, traspirante. Cuciture rinforzate. Colore grigio chiaro.

HOUSSES POUR HORS-BORD

Pour moteurs hors-bord 2 et 4 temps. Fabriqué en tissu polyester 320 g / m2. Imperméable, respirant. Coutures renforcées. Couleur gris clair.



REF		A	B
OCEMA0751	> 6 hp	98 cm	126 cm
OCEMA0752	8 - 15 hp	110 cm	140 cm
OCEMA0753	15 - 20 hp	125 cm	150 cm
OCEMA0754	20 - 30 hp	137 cm	165 cm
OCEMA0755	30 - 60 hp	144 cm	180 cm
OCEMA0756	60 - 100 hp	170 cm	200 cm
OCEMA0757	115 - 150 hp	190 cm	226 cm
OCEMA0758	175 - 250 hp	197 cm	248 cm

OCEANSOUTH



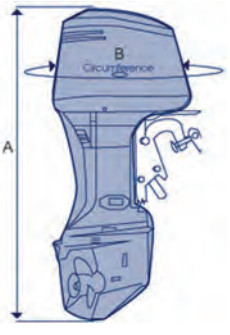

GUÍA MANTENIMIENTO COLAS Y Y KITS 64

SISTEMA DE ALIMENTACIÓN Y FILTRACIÓN 74

BOMBA DE COMBUSTIBLE 74
BOMBA DE COMBUSTIBLE 74
LÍNEA DE COMBUSTIBLE 74
MANGUERA DE COMBUSTIBLE 74
MUELLE TUBO COMBUSTIBLE 75
ADAPTADOR LÍNEA DE COMBUSTIBLE 75
COMPONENTES TANQUE Y CONECTORES 75
TAPÓN CON RESPIRADERO 75
FILTRO 75
TAPÓN 75
RESORTE DE SEGURIDAD PARA TAPÓN 75
MEDIDOR DE COMBUSTIBLE 76
LLAVE DE CIERRE DE DEPÓSITO 76
ABRAZADERA PARA MANGUERA 76
CONECTOR DE DEPÓSITO 76
PASAMAMPAROS 77
FILTRO DE COMBUSTIBLE Y ELEMENTOS 77
BRACKET 77
FILTRO COMBUSTIBLE SEPARADOR AGUA 77
FILTRO DECANTADOR DE COMBUSTIBLE COMPLETO CON VASO TRASPARENTE 78
LLAVES PARA FILTRO 79
RACOR DE LATÓN 79
FILTRO COMBUSTIBLE MONTAJE EN LÍNEA 80
GUÍA FILTROS DE COMBUSTIBLE 81
FILTRO VST 82
GUÍA FILTROS VST 82
FILTRO DE ACEITE 83
GUÍA FILTROS DE ACEITE 83
BOMBA DE INYECCIÓN DE ACEITE 84
ACEITE 84
BOMBA DE COMBUSTIBLE 85
BOMBA DE COMBUSTIBLE MECÁNICA 85
BOMBA DE COMBUSTIBLE ELÉCTRICA 86
MEMBRANAS Y JUNTAS 87
JUNTAS VST 88
REGULADORES DE PRESIÓN COMBUSTIBLE 89
INYECTORES 89
INYECTOR 89
GUÍA INYECTORES Y SENSORES 90
CARBURADOR 91
CARBURADOR COMPLETO 91
KIT 3 CARBURADORES 92
GUÍA CARBURADORES 93
JUNTAS CARBURADORES 94
KITS CARBURADORES 95
AGUJA CARBURADOR 98
TORNILLOS CARBURADOR 98
VÁLVULA DE LÁMINAS 99
PASADOR DE BOYA 99
BOYAS 100
CONECTOR DE CARBURADOR 100
ELEMENTO FILTRO DEL CARBURADOR 101
ACELERADOR 101
VARILLA DE ACELERADOR 101

SISTEMA ELÉCTRICO 102

SENSORES 102
SENSOR TPS 102
SENSOR MAP 102
SENSOR TEMPERATURA DEL AGUA 103
SENSOR ACCELERACIÓN TS 103
SENSOR PRESIÓN DE ACEITE 103
SENSOR DE OXÍGENO 103
BOBINAS 104
BOBINA DE LUZ 104
BOBINA DE IGNICIÓN 104
BOBINA DE T.C.I. 106
BOBINA DE CARGA 106
BOBINA DE PULSACIÓN 107
BUJÍAS 108
VOLANTE DE MOTOR 109
SIN DIENTES (MANUAL) 109
ELÉCTRICO 109
MOTORES DE ARRANQUE 110
MUELLE DE ARRANQUE 112
TRINQUETE TRACCIÓN PLATO 112
CABLE DE MOTOR DE ARRANQUE A BATERÍA 112
TIRADOR DE ARRANQUE 113
PLATO Y PLACA DE ARRANQUE MANUAL 113
LLAVES DE ARRANQUE 113
MONTAJE EN MANDO DE CONTROL 113
MONTAJE EN PANEL 113
LLAVE DOBLE INSTALACIÓN 113
LLAVE CON CHOQUE 114
LLAVE PARA MANDO POPERO 114
SOLENOIDE RELÉ 114
REGULADORES Y RECTIFICADORES 116
CDI Y CAJAS NEGRAS 117
DESCONECTORES DE SEGURIDAD 120
KITS 121
STARTOR 121
TRIM, TILT & POWER TRIM 122
INSTALACIÓN ELÉCTRICA 122
INTERRUPTOR POWER TRIM 122
TRIM COMPLETO BIDIRECCIONAL 122
POWER TRIM COMPLETO 124
DESPIECE PISTÓN TRIM 125
EXTRACTOR TAPONES DE TRIM 125

SISTEMA DE GOBIERNO 126

MANDOS DE CONTROL 126
MANDO LATERAL 126
MANDO PARA CONSOLA 127
CONECTORES DE CABLES 127
INTERRUPTORES PARA MANDOS 127
INTERRUPTOR POWER TRIM (703) 127
INTERRUPTOR PANEL SIMPLE (704) 127
INTERRUPTOR PANEL COMPLETO O DOBLE ESTACIÓN 128
ARNÉS 128
EXTENSIÓN DE ARNÉS (703/704) 128
ARNÉS COMPLETO (703) 128
COMPONENTES 703 128
ESPACIADOR 128
PALANCA ACELERADOR 128
PLACA CERRADURA SELECTOR 129
CABLE DE ACELERADOR 129
RUEDA ACELERACION 129
CABLES DE CONTROL 130
VARILLA DE ENLACE 130
MANETA ACELERADOR 130
BRACKET 131
BRACKET ESTRIBOR 131
BRACKET BABOR 131
SOPORTE GIRATORIO 131
SOPORTE BARRA DE DIRECCIÓN 131
RETÉN INFERIOR DEL BRACKET 131
SOPORTE INFERIOR 132
VARILLA DE BASCULACIÓN 132
CIRCLIP 132
CONECTOR 132
EJE CONECTOR ACELERADOR 132
ENGRASADOR INOX 316 M6 132
BUJES 133
COLLAR 133
MANDO ACELERADOR 133
EJE DE CAMBIO 134
MANETAS Y FIJACIONES 134
SILENBLOCK 135

SISTEMA DE REFRIGERACIÓN 136

LÍQUIDO INHIBIDOR DE LA CORROSIÓN 136
TERMOSTATO 136
TERMOSTATO 136
GUÍA TERMOSTATO 137
JUNTAS TERMOSTATO 138
CUBIERTAS TERMOSTATO 139
VÁLVULA ANTIPRESIÓN DE TERMOSTATO 139
RESORTE 139
NIPLE 139
JUNTAS TAPA DE REFRIGERACIÓN 140
GUÍA DE IMPULSORES 143
KITS DE JUNTAS 144
BOMBA DE AGUA 147
CUERPO BOMBA DE AGUA 147
TAPA DE LA BOMBA 148
KITS DE REPARACIÓN BOMBA DE AGUA 150
GUÍA KITS DE BOMBA DE AGUA 153
GUÍA BOMBAS DE AGUA 4T 154
GUÍA BOMBAS DE AGUA 2T 155
ÁNODOS 158
ÁNODO CANADA METAL 158
KITS DE ÁNODOS 162
ÁNODO TECNOSEAL 163
KITS DE ÁNODOS 168
TAPA DE ÁNODO (66M) 168
GUÍA DE ÁNODOS 169

PARTES DEL MOTOR 170

DESPIECE MOTOR DE 4 TIEMPOS 170
F2.5 170
F4 174
F5 • F6 178
F8 181
F9.9 180
F13.5 • F15 182
F20 • F25 190
F30 196
F40 196
F50 • F60 202
F70 204
F80 • F100 • F115 208
F150 210
F200 • F225 • F250 212
F300 • F350 214
JUNTAS DE MOTOR 4 TIEMPOS 215
JUNTAS DE CULATA 215
KIT JUNTAS DE CULATA 216
JUNTAS BASE DE MOTOR 217
GUÍA JUNTAS DE MOTOR 218
CIGÜEÑAL 219
GUÍA CIGÜEÑAL COMPLETO 219
PISTONES 219
KITS DE PISTONES 219
DESPIECE MOTOR DE 2 TIEMPOS 220
2 220
4 • 5 221
6 • 8 222
9.9 • 13.5 • 15 226
25 • 30 228
40 232
48 238
50 240
55 238
60 • 70 240
75 • 85 242
100 • 115 • 130 • 140 244
150 • 175 • 200 • 225 246
JUNTAS DE MOTOR 2 TIEMPOS 248
JUNTAS DE CULATA 248
KITS JUNTAS DE CULATA 248
JUNTAS BASE DE MOTOR 252
GUÍA JUNTAS DE MOTOR 254
JUNTAS DE CULATÍN 254
CIGÜEÑAL 256
GUÍA CIGÜEÑAL COMPLETO 256
GUÍA PARTES DE CIGÜEÑAL 256
GUÍA RODAMIENTOS DE MOTOR 257
GUÍA DE BIELAS 260
PISTONES 262
KIT DE PISTONES 262
GUÍA DE PISTONES Y SEGMENTOS 266
GUÍA CORREAS DE DISTRIBUCIÓN 267

SISTEMA DE ESCAPE Y ADMISIÓN 268

SISTEMA DE ESCAPE 268
JUNTAS DEL SISTEMA DE ESCAPE 268
JUNTAS DE COLECTOR Y CARTER 270
SISTEMA DE ADMISIÓN 273
JUNTAS DEL SISTEMA DE ADMISIÓN 273

UNIDADES DE TRANSMISIÓN 277

COLA COMPLETA 277
- COLAS DE 4 TIEMPOS 277
- COLAS DE 2 TIEMPOS 279

DESPIECE COLAS 4 TIEMPOS 282
- F2.5 282
- F4 284
- F5 286
- F6 • F8 • F9.9 288
- F13.5 • F15 290
- F20 • F25 294
- F30 • F40 298
- F50 • F60 310
- F70 314
- F80 • F100 318
- F115 • F130 322
- F150 • F175 • F200 326
- F225 330
- F250 • F300 334
- F350 340

DESPIECE COLAS 2 TIEMPOS 342
- 2 342
- 4 • 5 344
- 6 • 8 346
- 9.9 348
- 13.5 350
- 15 348
- 20 • 25 • 30 352
- 40 • 50 358
- 55 368
- 75 370
- 80 372
- 85 370
- 90 372
- 115 • 130 374
- V6 378
- 225 • 250 382
- VZ200 • VZ205 • VZ250 • VZ300 386

GUÍA PIEZAS COLA 387

GUÍA RODAMIENTOS 393

SISTEMA DE PROPULSIÓN 401

HÉLICES ALUMINIO E INOXIDABLE DE 3 Y 4 PALAS 401
- GUÍA HÉLICES CON NÚCLEO INTEGRADO 402
- HÉLICES PARA NÚCLEO INTERCAMBIABLE 404
- NÚCLEO INTERCAMBIABLE 405
- GUÍA DE RECAMBIOS DE HÉLICE 405

REF --> RO 406

RO --> REF 423

EN

DRIVES MAINTENANCE GUIDE & KITS 64

FUEL & FILTRATION SYSTEM 74

FUEL PUMP 74
- FUEL PUMP 74
- FUEL LINE ASSEMBLY 74
- FUEL HOSE 74
- SPRING, FUEL PIPE 75
- COUPLER 75

FUEL TANK COMPONENTS & CONNECTORS 75
- PLUG WITH BREATHER 75
- FILTER 75
- PLUG 75
- SPRING, PREVENT DESQUAMATING 75
- OLEOMETER ASSY 76
- KNOB OIL SWITCH 76
- CLAMP SMALL 76
- TANK CONNECTOR 76
- THRU HULL 77

FUEL FILTERS AND ELEMENTS 77
- BRACKET 77
- WATER SEPARATING FUEL FILTER 77
- COMPLET FUEL FILTER WITH TRANSPARENT BOWL 78
- FILTER KEY 79
- RACOR MADE IN BRASS 79
- IN-LINE FUEL FILTER 80
- FUEL FILTER GUIDE 81
- VST FILTER 82
- FUEL FILTER GUIDE 82

OIL FILTER 83
- OIL FILTER GUIDE 83

OIL INJECTION PUMP 84

OIL 84

FUEL PUMP 85
- FUEL PUMP MECHANICAL 85
- FUEL PUMP ELECTRIC 86
- DIAPHRAGMS & GASKETS 87
- VST GASKETS 88
- FUEL REGULATOR 89

INJEKTOR 89
- INJEKTOR 89
- GUIDE INJECTORS & SENDERS 90

CARBURATOR 91
- FULL CARBURATOR 91
- KIT 3 CARBURETORS 92
- GUIDE CARBURETORS 93
- CARBURETOR GASKES 94
- CARBURETOR KITS 95
- NEEDLE VALVE 98
- BOLT SCREW 98
- VALVE OF SHEETS 99
- PIN FLOAT 99
- FLOATS 100
- ACCELEROGRAPH CONTROL 100
- ELEMENT FILTER (CARB INLET) 101

ACCELERATOR 101
- VARILLA DE ACELERADOR 101

ELECTRIC SYSTEM 102

SENSORS 102
- TPS SENDER 102
- MAP SENSOR 102
- SENSOR, WATER TEMPERATURE 103
- SENSOR 103
- SENSOR, OIL PRESSURE 103
- OXYGEN SENSOR 103

COILS 104
- COIL LIGHTING 104
- IGNITION COIL 104
- T.C.I. COIL 106
- CHARGE COIL 106
- PULSER COIL 107
- SPARK 108

FLYWHELL 109
- WITHOUT TOOTH 109
- ELECTRIC 109

STARTERS 110
- STEERING SPRING 112
- PAWL, DRIVE 112
- CONNECTION LINE, POWER 112
- STARTER HANDLE ASSY 113
- PLATE & DRUM, DRIVE 113

IGNITION STARTER SWITCH 113
- CONTROL BOX 113
- DASH MOUNT 113
- DUAL ENGINE APPLICATION 113
- PUSH T. CHOKE 114
- KEY FOR STERN CONTROL 114

SOLENOID RELAY 114

REGULATOR AND RECTIFIERS 116

CDI & POWER PACK 117

CUT OFF SWITCHES 120
- KIT 121

STARTOR 121

TRIM, TILT & POWER TRIM 122
- WIRING HARNESS 122
- POWER TRIM SWITCH 122
- COMPLETE TRIM ASSEMBLY 122
- COMPLETE POWER TRIM ASSEMBLY 124
- PARTI PISTONE TRIM 125
- TRIM PLUGS EXTRACTOR 125

STEERING SYSTEM 126

ENGINE CONTROLS 126
- SIDE CONTROL 126
- CONSOLE CONTROL 127
- CABLE CONNECTOR 127

SWITCHS FOR ENGINE CONTROLS 127
- POWER TRIM SWITCH (703) 127
- SWITCH (704) 127
- PANEL TWIN STATION 128

ARNES 128
- ARNES EXTENSION (703/704) 128
- ARNES ASSY (703) 128

COMPONENTS 703 128
- PLATE CONTROL BOX 128
- THROTTLE HANDLE INCHING 128
- BLOCK CONTROL HANDLE 129
- THROTTLE CABLE 129
- LEVER THROTTLE 129
- CONTROL CABLES 130
- LINK ROD ASSY 130
- LEVER, THROTTLE 130

BRACKET 131
- RIGHT BRACKET ASSY 131
- LEFT BRACKET ASSY 131
- BRACKET ROTARY 131
- BOLT, CLAMP BRACKET 131
- BRACKET OIL SEAL 131
- SHELL, MOUNT DAMPER 132
- TILT ROD 132
- CIRCLIP 132
- CONNECTOR 132
- THROTTLE SHAFT CONNECTOR 132
- OILER M6 132

BUSHINGS 133

WASHER, BELOW 133

STEERING HANDLE ASSY 133

HANDLE GEAR SHIFT ASSY 134

STARTER HANDLE & FIXINGS 134

SILENBLOCK 135

COOLING SYSTEM 136

SALT OFF 136

THERMOSTAT 136
- THERMOSTAT 136
- THERMOSTAT GUIDE 137
- THERMOSTATO GASKETS 138
- THERMOSTATO COVER 139
- THERMOTAT, PRESSURE VALVE 139
- SPRING 139
- NIPPLE 139
- GASKET, EXHAUST INNER COVER 140

IMPELLER GUIDE 143

GASKETS KIT 144

WATER PUMP 147
- HOUSING, WATER PUMP 147
- WATER PUMP, COVER 148
- WATER PUMP SERVICE KITS 150
- GUIDE OF WATER PUMP SERVICE KITS 153
- GUIDE WATER PUMP 4 STROKES 154
- GUIDE WATER PUMP 2 STROKES 155

ANODES 158
- ANODES CANADA METAL 158
- ANODES KIT 162
- ANODES TECNOSEAL 163
- ANODES KIT 168
- COVER ANODE (66M) 168
- ANODES APPLICATION 169

ENGINE PARTS 170

ENGINE PARTS 4 STROKES 170
F2.5 170
F4 174
F5 • F6 178
F8 181
F9.9 180
F13.5 • F15 182
F20 • F25 190
F30 196
F40 196
F50 • F60 202
F70 204
F80 • F100 • F115 208
F150 210
F200 • F225 • F250 212
F300 • F350 214
ENGINE GASKET 4 STROKES 215
CYLINDER HEAD GASKET 215
CYLINDER HEAD GASKET KIT 216
CYLINDER GASKET 217
ENGINE GASKET GUIDE 218
CRANKSHAFT 219
GUIDE CRANKSHAFT ASSY 219
PISTONS 219
PISTON KITS 219
ENGINE PARTS 2 STROKES 220
2 220
4 • 5 221
6 • 8 222
9.9 • 13.5 • 15 226
25 • 30 228
40 232
48 238
50 240
55 238
60 • 70 240
75 • 85 242
100 • 115 • 130 • 140 244
150 • 175 • 200 • 225 246
ENGINE GASKET 2 STROKES 248
CYLINDER HEAD GASKET 248
CYLINDER HEAD GASKET KIT 248
CYLINDER GASKET 252
ENGINE GASKET GUIDE 254
GASKET, HEAD COVER 254
CRANKSHAFT 256
GUIDE CRANKSHAFT ASSY 256
GUIDE CRANKSHAFT PARTS 256
GUIDE ENGINE BEARING 257
GUIDE CONNECTING ROAD 260
PISTON 262
PISTON KITS 262
GUIDE PISTON & RING 266
GUIDE TIMIMG BELT 267

EXHAUST & INTAKE SYSTEM 268

EXHAUST SYSTEM 268
EXHAUST GASKETS 268
GASKET, UPPERCASING, OIL PAN, MANIFOLD 270
INTAKE SYSTEM 273
GASKETS INTAKE 273

UNIT DRIVES & COMPONENTS 277

COMPLETE GEARCASE ASSY 277
4 STROKES GEARCASE 277
2 STROKES GEARCASE 279
GEAR CASE PARTS 4 STROKES 282
F2.5 282
F4 284
F5 286
F6 • F8 • F9.9 288
F13.5 • F15 290
F20 • F25 294
F30 • F40 298
F50 • F60 310
F70 314
F80 • F100 318
F115 • F130 322
F150 • F175 • F200 326
F225 330
F250 • F300 334
F350 340
GEARCASE PARTS 2 STROKES 342
2 342
4 • 5 344
6 • 8 346
9.9 348
13.5 350
15 348
20 • 25 • 30 352
40 • 50 358
55 368
75 370
80 372
85 370
90 372
115 • 130 374
V6 378
225 • 250 382
VZ200 • VZ205 • VZ250 • VZ300 386
STERN DRIVE COMPONENTS GUIDE 387
STERN DRIVE BEARING APPLICATION 393

PROPULSION SYSTEM 401

3 & 4 BLADE ALUMINIUM & SS PROPELLERS 401
PROPELLERS APPLICATION WITH RUBBER HUB 402
PROPELLERS FOR INTERCHANGEABLE HUB 404
INTERCHANGEABLE HUB 405
PROPELLER SPARE PARTS 405
REF --> OEM 406
OEM --> REF 423

IT

GUIDA MANUTENZIONE E KIT 64

SISTEMA DI ALIMENTAZIONE E FILTRAZIONE 74

POMPA BENZINA 74
POMPA BENZINA 74
TUBO CARBURANTE 74
TUBO BENZINA 74
MOLLA TUBO COMBUSTIBILE 75
ADATTATORE 75
COMPONENTI SERBATOIO E CONETTORI 75
SPINA CON RESPIRO 75
FILTRO 75
TAPPO 75
MOLLA SECURITÀ PER TAPPO 75
MISURATORE DI CARBURANTE 76
CHIAVE DE DEPOSITO BLOCCO 76
FASCETTE 76
ATTACCO SERBATOIO 76
PASSASCAFO 77
FILTRI BENZINA E RACCORDI 77
SUPPORTO 77
FILTRO SEPARATORE ACQUA-BENZINA 77
FILTRO DI DECANTAZIONE BENZINA COMPLETO CON VASCHETTA TRASPARENTE 78
CHIAVE DA FILTRO 79
RACCORDO IN OTTONE 79
FILTRO BENZINA PER MONTARE IN LÍNEA 80
GUIDA FILTRO BENZINA 81
FILTRO VST 82
GUIDA FILTRO BENZINA VST 82
FILTRO OLIO 83
GUIDA FILTRO OLIO 83
POMPA INIEZIONE BENZINA
OLIO 84
POMPA BENZINA 85
POMPA BENZINA MECCANICA 85
POMPA BENZINA ELETTRICA 86
MEMBRANA E GUARNIZIONI 87
GUARNIZIONE VST 88
REGOLATORE BENZINA 89
INIETTORE 89
INIETTORE 89
GUIDA INIETTORI E SENSORI 90
CARBURATORE 91
CARBURATORE COMPLETO 91
KIT 3 CARBURATORI 92
GUIDA CARBURATORI 93
GUARNIZIONI CARBURATORI 94
KIT CARBURATORI 95
SPILLO CONICO CARBURATORE 98
VITE CARBURATORE 98
VALVOLA 99
SPINOTTO GALLEGGIANTE 99
GALLEGGIANTE 100
CONTROLLO DELL'ACCELEROGRAFO 100
FILTRO CARBURATORE 101
ACCELLERATORE 101
ASTA ACCELLERATORE 101

SISTEMA ELETTRICO 102

SENSORE 102
SENSORE TPS 102
SENSORE MAP 102
SENSORE TEMPERATURA ACQUA 103
SENSORE ACCELLERATORE TS 103
SENSORE PRESIONE DELL'OLIO 103
SENSORE OSSIGENO 103
BOBINE 104
BOBINA LUCE 104
BOBINA AVVIAMENTO 104
BOBINE T.C.I. 106
BOBINA DI CARICA 106
BOBINE ACCENSIONE 107
CANDELE 108
VOLANTE MOTORE 109
SENZA DENTI (MANUALE) 109
ELETTRICO 109
MOTORINI AVVIAMENTO 110
MOLLA AVVIAMENTO 112
CRICCHETTO TRAZIONE PLATTO 112
CAVO MOTORE DI AVVIAMENTO A BATTERIA 112
MANIGLIA AVVIAMENTO 113
PLACCA E PLATTO DI AVVIAMENTO MANUALE 113
CHIAVI DI ACCENSIONE 113
MONTAGGIO NEL TELECOMANDO 113
MONTAGGIO NEL PANNELLO 113
CHIAVE DOPPIA INSTALLAZIONE 113
CHIAVE CON CONTATTO 114
CHIAVE PER COMANDO A GUIDA 114
SOLENOIDE RELE 114
REGOLATORI E RADDRIZZATORI 116
CDI E CENTRALINA 117
CHIAVETTA DI SICUREZZA 120
KIT 121
STARTOR 121
TRIM, TILT & POWER TRIM 122
INSTALLAZIONE ELETTRICA 122
INTERRUTTORE POWER TRIM 122
MOTORINO TRIM COMPLETO 122
MOTORINO POWER TRIM COMPLETO 124
PARTI PISTONE TRIM 125
ESTRATTORE PER TAPPI DI TRIM 125

SISTEMA DI GUIDA 126

COMANDI DI CONTROLLO 126
COMANDO LATERALE 126
COMANDO PER CONSOLLA 127
CAVO CONNETTORE 127
INTERRUTTORI PER CONTROLLO 127
INTERRUTTORE POWER TRIM (703) 127

INTERRUTTORE PANELLO SIMPLE (704) 127
PANNELLO DOPPIA STAZIONE 128
CAVI 128
ESTENSIONE (703/704) 128
CAVO CONTROLLO COMPLETO (703) 128
COMPONENTI 703 128
DISTANZIALE 128
LEVA ACCELLERATORE 128
PLACCA SERRATURA SELETTORE 129
CAVO ACCELERATORE 129
RUOTA ACCELERAZIONE 129
CAVI COMANDO 130
LEVA COLLEGAMENTO 130
MANIGLIA 130
BRACKET 131
BRACKET TRIBORDO 131
BRACKET BABORDO 131
SUPPORTO GIRATORIO 131
SUPPORTO BARRA DE DIREZIONE 131
ANELLO BRACCETTO 131
SUPPORTO INFERIORE 132
ASTA BASCULANTE 132
CIRCLIP 132
CONNETTORE 132
ASSE CONNETTORE ACCELLERATORE 132
INGRASSATORE INOX 316 M6 132
BOCCOLE 133
COLLARE 133
MANIGLIA 133
LEVERAGGIO 134
MANIGLIE E CHIUSURE 134
SILENBLOCK 135

SISTEMA DI RAFFREDDAMENTO 136

LIQUIDO INIBITORE DELLA CORROSIONE 136
TERMOSTATO 136
TERMOSTATO 136
GUIDA TERMOSTATO 137
GUARNIZIONI TERMOSTATO 138
COPERCHIO TERMOSTATO 139
VALVOLA ANTI-PRESSIONE DE TERMO-STATO 139
MOLLA 139
NIPLE 139
GUARNIZIONE COPERCHIO REFRIGERAZI-ONE 140
GUIDA GIRANTE 143
KIT GUARNIZIONE 144
POMPA ACQUA 147
CORPO, POMPA ACQUA 147
COPERCHIO POMPA 148
KIT RICAMBI POMPA ACQUA 150
GUIDA KIT POMPA ACQUA 153
GUIDA POMPA ACQUA 4T 154
GUIDA POMPA ACQUA 2T 155
ANODI 158
ANODI CANADA METAL 158
KIT ANODI 162
ANODI TECNOSEAL 163
KITS ANODI 168
COPERCHIO ANODO (66M) 168
GUIDA ANODI 169

PARTI MOTORE 170

PARTI MOTORE 4 TEMPI 170
F2.5 170
F4 174
F5 • F6 178
F8 181
F9.9 180
F13.5 • F15 182
F20 • F25 190
F30 196
F40 196
F50 • F60 202
F70 204
F80 • F100 • F115 208
F150 210
F200 • F225 • F250 212
F300 • F350 214
GUARNIZIONI MOTORE 4 TEMPI 215
GUARNIZIONE TESTATA 215
KIT GUARNIZIONE TESTATA 216
GUARNIZIONE BASE MOTORE 217
GUIDA GUARNIZIONE MOTORE 218
ALBERO MOTORE 219
GUIDA ALBERO MOTORE COMPLETO 219
PISTONI 219
KIT PISTONI 219
PARTI MOTORE 2 TEMPI 220
2 220
4 • 5 221
6 • 8 222
9.9 • 13.5 • 15 226
25 • 30 228
40 232
48 238
50 240
55 238
60 • 70 240
75 • 85 242
100 • 115 • 130 • 140 244
150 • 175 • 200 • 225 246
GUARNIZIONI MOTORE 2 TEMPI 248
GUARNIZIONE DE TESTATA 248
KIT GUARNIZIONE TESTATA 248
GUARNIZIONE BASE MOTORE 252
GUIDA GUARNIZIONE MOTORE 254
GUARNIZIONE COPERCHIO TESTATA 254
ALBERO MOTORE 256
GUIDA ALBERO MOTORE COMPLETO 256
GUIDA PARTE ALBERO MOTORE 256
GUIDACUSCINETTI MOTORE 257
GUIDA BIELLE 260
PISTONE 262
KIT PISTONE 262
GUIDA PISTONE E FASCE 266
GUIDA CINGHIE DISTRIBUZIONE 267

SISTEMA DI SCARICO E ASPIRAZIONE 268

SISTEMA SCARICO 268
GUARNIZIONE SCARICO 268
GUARNIZIONI COLLETTORE E CARTER 270
SISTEMA ASPIRAZIONE 273
GUARNIZIONE SISTEMA ASPIRAZIONE 273

UNIDADES DE TRANSMISIÓN 277

UNITÀ DI TRASMISSIONE 277
PIEDI COMPLETI 277
PIEDI 4 TEMPI 279
PARTI PIEDI 4 TEMPI 282
F2.5 282
F4 284
F5 286
F6 • F8 • F9.9 288
F13.5 • F15 290
F20 • F25 294
F30 • F40 298
F50 • F60 310
F70 314
F80 • F100 318
F115 • F130 322
F150 • F175 • F200 326
F225 330
F250 • F300 334
F350 340
PARTI PIEDI 2 TEMPI 342
2 342
4 • 5 344
6 • 8 346
9.9 348
13.5 350
15 348
20 • 25 • 30 352
40 • 50 358
55 368
75 370
80 372
85 370
90 372
115 • 130 374
V6 378
225 • 250 382
VZ200 • VZ205 • VZ250 • VZ300 386
GUIDA RICAMBI PIEDI 387
GUIDA CUSCINETTI TRASMISIONE 393

SISTEMA DI PROPULSIONE 401

HÉLICES ALUMINIO E INOXIDABLE DE 3 Y 4 PALAS 401
ELICHE ALLUMINIO E INOX DA 3 E 4 PALE 402
GUIDA ELICHE CON MOZZO 404
ELICHE PER MOZZO INTERCAMBIABILE 405
MOZZO INTERCAMBIABILE 405
GUIDA RICAMBIO ELICHE 405
REF --> RO 406
RO --> REF 423

FR

GUIDE MAINTENANCE KITS 64

SYSTÈME D'ALIMENTATION ET DE FILTRATION 74

POIRE À CARBURANT 74
POIRE À CARBURANT 74
TUYAU CARBURANT 74
TUYAU CARBURANT 74
RESSORT, TUYAU DE CARBURANT 75
RACCORD COUPLEUR 75
COMPOSANTS ET CONNECTEURS DU RÉSER-VOIR 75
BOUCHON AVEC EVENT 75
FILTRE 75
BOUCHON 75
RESSORT DE SECURITÉ POUR LE BOUCHON 75
TUBE D'ASPIRATION POUR RESERVOIR 76
COMMUTATEUR D'HUILE AVEC BOUTON 76
COLLIER 76
RACCORDS DE RESERVOIR 76
PASSE-CLOISON 77
FILTRE A ESSENCE ET CARTOUCHE DE RE-CHANGE 77
TÊTE DE FILTRE À ESSENCE 77
FILTRE À ESSENCE 77
FILTRE SÉPARATEUR D'ESSENCE 78
CLÉ À FILTRE 79
RACCORD EN LAITON 79
FILTRE A ESSENCE EN LIGNE 80
GUIDE FILTRE À ESSENCE 81
FILTRE VST 82
GUIDE FILTRES VST 82
FILTRE A HUILE 83
GUIDE FILTRE A HUILE 83
POMPE D'INJECTION D'HUILE 84
HUILES 84
POMPE À ESSENCE 85
POMPE À ESSENCE MECANIQUE 85
POMPE À ESSENCE ELECTTRIQUE 86
MEMBRANES ET JOINTS 87
JOINTS VST 88
REGULATEUR DE PRESSION D'ESSENCE 89
INJECTEURS 89
INJECTEUR 89
GUIDE INJECTEURS ET SONDES 90
CARBURATEUR 91
CARBURATEUR COMPLET 91
KIT DE 3 CARBURATEURS 92
GUIDE DES CARBURATEURS 93
JOINTS DE CARBURATEUR 94
KIT CARBURATEUR 95

SIEGE, POINTEAU ET GICLEUR 98
VIS DE CARBURATEUR 98
CLAPET D'ADMISSION 99
AXE DE FLOTTEUR 99
FLOTTEUR DE CARBURATEUR 100
ATTACHE TIGE D'ACCELERATEUR 100
FILTRE DU CARBURATEUR 101
ACCELERATEUR 101
TIGE LEVIER ACCELERATEUR 101

SYSTÈME ÉLECTRIQUE 102

CAPTEURS 102
CAPTEUR TPS 102
CAPTEUR MAP 102
CAPTEUR DE TEMPERATURE 103
CAPTEUR D'ACCELERATEUR TS 103
SONDE DE PRESSION D'HUILE 103
SONDE À OXYGENE 103
BOBINES 104
BOBINE D'ÉCLAIRAGE 104
BOBINE D'ALLUMAGE 104
BOBINE T.C.I. 106
BOBINE DE CHARGE 106
BOBINE PULSEUR 107
BOUGIES 108
VOLANT MOTEUR 109
MANUEL SANS DENT 109
ÉLECTRIQUE 109
DEMARREUR 110
RESSORT DE LANCEUR 112
ENTRAÎNEMENT 112
CABLE DE CONNEXION 112
POIGNEE DE LANCEUR 113
TAMBOUR, POULIE 113
CONTACTEUR A CLÉ 113
MONTAGE POUR BOITIER DE COMMANDE 113
MONTAGE POUR TABLEAU DE BORD 113
POUR INSTALLATION DOUBLE 113
AVEC STARTER 114
CONTACTEUR A CLÉ COMPLET 114
SOLENOIDE RELAIS 114
REGULATEURS ET RECTIFIEURS 116
CDI ET BOITIER ELECTRONIQUE 117
COUPE CIRCUIT DE SECURITE 120
KITS 121
STARTOR 121
TRIM, TILT & POWER TRIM 122
INSTALLATION ELECTRIQUE 122
INTERRUPTEUR DE TRIM 122
MOTEUR DE TRIM 122
POWER TRIM COMPLET 124
PIECES VERIN DE TRIM 125
KIT EXTRACTEUR 125

SYSTÈME DE DIRECTION 126

BOITIER DE COMMANDE 126
BOITIER LATERAL 126
BOITIER POUR CONSOLE 127
EMBOUT DE CABLE 127
INTERRUPTEUR DE CONTRÔLE 127
COMMUTATEUR DE TRIM (703) 127
TABLEAU DE COMMANDE SIMPLE (704) 127
BOITIER DE DEMARRAGE 2 MOTEURS 128
FAISCEAU ELECTRIQUE 128
RALLONGE FAISCEAU (703/704) 128
FAISCEAU ELECTRIQUE BOITIER CDE (703) 128
COMPOSANT (703) 128
PLAQUE BOITIER DE COMMANDE 128
POIGNEE DE PAPILLON 128
CALE POIGNEE DE CONTRÔLE 129
CÂBLE D'ACCELERATEUR 129
ROUE D'ACCELERATEUR 129
CÂBLES DE COMMANDE 130
BARRE D'ACCOUPLEMENT COMPLETE 130
LEVIER DE COMMANDE 130
BRACKET 131
ETRIER DROIT 131
ETRIER GAUCHE 131
SUPPORT TOURNANT 131
TUBE SUPPORT CABLE DE DIRECTION 131
JOINT INFERIEUR DU SUPPORT 131
SUPPORT SILENT BLOCK 132
BARRE DE TILT 132
CIRCLIP 132
CONNECTEUR 132
TIGE DE CONNEXION ACCELERATEUR 132
GRAISSEUR M6 INOX 316 132
BAGUES 133
CALLE 133
POIGNEE DE DIRECTION 133
COMMANDE D'INVERSION 134
POIGNEE LANCEUR ET DE SERRAGE 134
SILENT BLOC 135

SYSTÈME DE REFROIDISSEMENT 136

SALT OFF 136
THERMOSTAT 136
THERMOSTAT 136
GUIDE DES THERMOSTATS 137
JOINTS DE THERMOSTAT 138
COUVERCLE DE THERMOSTAT 139
SOUPAPE DE PRESSION DE THERMOSTAT 139
RESSORT 139
TETINE 139
JOINT DE PLAQUE DE REFROIDISSEMENT 140
GUIDE TURBINES 143
KITS JOINTS 144
POMPE D'EAU 147
CORPS DE POMPE A EAU 147
PLAQUE DE POMPE A EAU 148
KIT REPARATION DE POMPE À EAU 150
GUIDE KITS POMPES A EAU 153
GUIDE POMPE À EAU 4T 154
GUIDE POMPE À EAU 2T 155
ANODES 158
ANODE CANADA METAL 158
KIT ANODES 162
ANODE TECNOSEAL 163
KIT ANODES 168
COUVERCLE DU ANODE (66M) 168
GUIDE DES ANODES 169

PIECES MOTEUR 170

PIECES MOTEURS DE 4 TEMPS 170
F2.5 170
F4 174
F5 • F6 178
F8 181
F9.9 180
F13.5 • F15 182
F20 • F25 190
F30 196
F40 196
F50 • F60 202
F70 204
F80 • F100 • F115 208
F150 210
F200 • F225 • F250 212
F300 • F350 214
JOINTS DE MOTEUR 4 TEMPS 215
JOINTS DE CULASSE 215
KIT JOINTS DE CULASSE 216
JOINTS DE TÊTE MOTRICE 217
GUIDE JOINTS DE MOTEURS 218
VILEBREQUIN 219
GUIDE VILEBREQUIN COMPLET 219
PISTONS 219
KIT PISTON 219
PIECES MOTEUR 2 TEMPS 220
2 220
4 • 5 221
6 • 8 222
9.9 • 13.5 • 15 226
25 • 30 228
40 232
48 238
50 240
55 238
60 • 70 240
75 • 85 242
100 • 115 • 130 • 140 244
150 • 175 • 200 • 225 246
JOINTS DE MOTEUR 2 TEMPS 248
JOINT DE CULASSE 248
KITS JOINT DE CULASSE 248
JOINTS DE TETE MOTRICE 252
GUIDE JOINTS DE MOTEURS 254
JOINT DE COUVRE CULASSE 254
ALBERO MOTORE 256
GUIDE VILEBREQUIN COMPLET 256
GUIDE PARTS DE VILEBREQUIN 256
GUIDE ROULEMENTS DE MOTEUR 257
GUIDE DE BIELLES 260
PISTONS 262
KIT DE PISTONS 262
GUIDE PISTONS ET SEGMENTS 266
GUIDE DES COURROIES DE DISTRIBUTION 267

SYSTÈME D'ECHAPPEMENT ET SYSTÈME D'ADMISSION 268

SYSTÈME D'ECHAPPEMENT 268
JOINTS D'ECHAPPEMENT 268
JOINTS DE COLLECTEUR ET CARTER D'HUILE 270
SYSTÈME D'ADMISSION 273
JOINTS D'ADMISSION 273

EMBASES ET PIECES 277

EMBASE COMPLETE 277
EMBASES DE MOTEUR 4T 277
EMBASES DE MOTEUR 2T 279
PIECES D'EMBASES DE 4 TEMPS 282
F2.5 282
F4 284
F5 286
F6 • F8 • F9.9 288
F13.5 • F15 290
F20 • F25 294
F30 • F40 298
F50 • F60 310
F70 314
F80 • F100 318
F115 • F130 322
F150 • F175 • F200 326
F225 330
F250 • F300 334
F350 340
PIECES D'EMBASES DE 2 TEMPS 342
2 342
4 • 5 344
6 • 8 346
9.9 348
13.5 350
15 348
20 • 25 • 30 352
40 • 50 358
55 368
75 370
80 372
85 370
90 372
115 • 130 374
V6 378
225 • 250 382
VZ200 • VZ205 • VZ250 • VZ300 386
GUIDE PIECES D'EMBASE 387
GUIDE ROULEMENTS D'EMBASE 393

SYSTEME DE PROPULSION 401

HELICE ALUMINIUM ET INOX 3 ET 4 PALES 401
GUIDE DES HELICES ET MOYEUX 402
HELICES AVEC MOYEU INTERCHANGEABLE 404
MOYEU INTERCHANGEABLE 405
GUIDE DES PIECES POUR HELICE 405
REF --> RO 406
RO --> REF 423

GUÍA KITS MANTENIMIENTO — MAINTENANCE GUIDE & KITS — GUIDA MANUTENZIONE E KIT — GUIDE MAINTENANCE KITS

	KIT	REF					
F2.5 A (2002-14)	RECKITF2.5A	NGKBR6HS	BUJÍA	SPARK PLUG	CANDELE	BOUGIE	1
		PAF4-04070003	ÁNODO	ANODE	ANODO	ANODE	1
		PAF4-04000011	JUNTA	GASKET	GUARNIZIONE	JOINT	1
		PAF4-04000006	JUNTA	GASKET	GUARNIZIONE	JOINT	1
		PAF4-04120005	FILTRO COMBUSTIBLE	FUEL FILTER	FILTRO COMBUSTIBILE	FILTRE ESSENCE	1
		REC90430-08020	JUNTA DESAGÜE	DRAIN GASKET	GUARNIZIONE DRENAGGIO	JOINT DE VIDANGE	x 2
		PAF4-03000022	ÁNODO	ANODE	ANODO	ANODE	1
		PAGB/T91-1.6X12	PIN BLOQUEADOR	COTTER PIN	COPPIGLIA	GOUPILLE	1
		PAF2.6-03000013	PIN	PIN	PIN	PIN	1
		PAF2.6-03000100	TURBINA	IMPELLER	GIRANTE	TURBINE	1
		PAJASOF404-19-033	TÓRICA	O-RING	O-RING	JOINT TORIQUE	1
F2.5 B (2015+)	RECKITF2.5B	NGKCR6HSB	BUJÍA	SPARK PLUG	CANDELE	BOUGIE	1
		PAF4-04070003	ANODO	ANODE	ANODO	ANODE	1
		PAF4-04000011	JUNTA	GASKET	GUARNIZIONE	JOINT	1
		PAF4-04000006	JUNTA	GASKET	GUARNIZIONE	JOINT	1
		PAF4-04120005	FILTRO COMBUSTIBLE	FUEL FILTER	FILTRO COMBUSTIBILE	FILTRE ESSENCE	1
		REC90430-08020	JUNTA DESAGÜE	DRAIN GASKET	GUARNIZIONE DRENAGGIO	JOINT DE VIDANGE	x 2
		PAF4-03000022	ÁNODO	ANODE	ANODO	ANODE	1
		PAGB/T91-1.6X12	PIN BLOQUEADOR	COTTER PIN	COPPIGLIA	GOUPILLE	1
		PAF2.6-03000013	PIN	PIN	PIN	PIN	1
		PAF2.6-03000100	TURBINA	IMPELLER	GIRANTE	TURBINE	1
F4 A (1998-09)	RECKITF4A	NGKBR6HS	BUJÍA	SPARK PLUG	CANDELE	BOUGIE	1
		PAF4-04070003	ANODO	ANODE	ANODO	ANODE	1
		PAF4-04000011	JUNTA	GASKET	GUARNIZIONE	JOINT	1
		PAF4-03000018	JUNTA	GASKET	GUARNIZIONE	JOINT	1
		PAF4-05000300	FILTRO COMBUSTIBLE	FUEL FILTER	FILTRO COMBUSTIBILE	FILTRE ESSENCE	1
		REC90430-08020	JUNTA DESAGÜE	DRAIN GASKET	GUARNIZIONE DRENAGGIO	JOINT DE VIDANGE	x 2
		PAF4-03000022	ÁNODO	ANODE	ANODO	ANODE	1
		PAGB/T91-1.6X12	PIN BLOQUEADOR	COTTER PIN	SPINOTTO	PIN	1
		PAF4-03000016	PIN	PIN	PIN	PIN	1
		PAF4-03060000	TURBINA	IMPELLER	GIRANTE	TURBINE	1
		PAF4-04000030	MUELLE DEL TUBO DE COMBUTIBLE	CLAMP	MOLLA TUBO COMBUSTIBILE	COLLIER TUYAU DE CARBURANT	x 2
		PAF4-04000006	JUNTA	GASKET	GUARNIZIONE	JOINT	1
F4 B/ F5 A (2010+)	RECKITF5A	NGKCR6HSB	BUJÍA	SPARK PLUG	CANDELE	BOUGIE	1
		PAF4-04070003	ANODO	ANODE	ANODO	ANODE	1
		PAF4-04000011	JUNTA	GASKET	GUARNIZIONE	JOINT	1
		PAF4-03000018	JUNTA	GASKET	GUARNIZIONE	JOINT	1
		REC68T-24251-00	FILTRO COMBUSTIBLE	FUEL FILTER	FILTRO COMBUSTIBILE	FILTRE ESSENCE	1
		REC90430-08020	JUNTA DESAGÜE	DRAIN GASKET	GUARNIZIONE DRENAGGIO	JOINT DE VIDANGE	x 2
		PAF4-03000022	ÁNODO	ANODE	ANODO	ANODE	1
		PAGB/T91-1.6X12	PIN BLOQUEADOR	COTTER PIN	COPPIGLIA	GOUPILLE	1
		PAF4-03000016	PIN	PIN	PIN	PIN	1
		PAF4-03060000	TURBINA	IMPELLER	GIRANTE	TURBINE	1
		PAF4-04000030	MUELLE DEL TUBO DE COMBUTIBLE	SPRING, FUEL PIPE	MOLLA TUBO COMBUSTIBILE	COLLIER TUYAU DE CARBURANT	x 2
		PAF4-04000006	JUNTA	GASKET	GUARNIZIONE	JOINT	1
F6 A/B (2000-09) F8 C (2000+) F8F (2015+) F9.9F (2008-12) F9.9J (2013+)	RECKITF6A	NGKBR6HS-10	BUJÍA	SPARK PLUG	CANDELE	BOUGIE	x 2
		PAF4-04070003	ANODO	ANODE	ANODO	ANODO	1
		PAJASOF40431-025	TÓRICA	O-RING	O-RING	JOINT TORIQUE	1
		PAGB/T3452.1-13X2	TÓRICA	O-RING	O-RING	JOINT TORIQUE	1
		REC68T-24251-00	FILTRO COMBUSTIBLE	FUEL FILTER	FILTRO COMBUSTIBILE	FILTRE ESSENCE	1
		PAF4-04000030	MUELLE DEL TUBO DE COMBUTIBLE	SPRING, FUEL PIPE	MOLLA TUBO COMBUSTIBILE	COLLIER TUYAU DE CARBURANT	x 2
		REC09168-12017	ARANDELA	WHASER	RONDELLA	RONDELLE	1
		CM68T-45251-00A	ANODO	ANODE	ANODO	ANODO	1
		REC90430-08020	JUNTA DESAGÜE	DRAIN GASKET	GUARNIZIONE DRENAGGIO	JOINT DE VIDANGE	x 2
		REC91490-30025	PIN BLOQUEADOR	COTTER PIN	COPPIGLIA	GOUPILLE	1
		REC68T-W0078-00	KIT BOMBA DE AGUA	WATER PUMP REPAIR KIT	KIT POMPA DELL'ACQUA	KIT POMPE À EAU	1
F6C (2010+)	RECKITF6C	NGKCR6HSB	BUJÍA	SPARK PLUG	CANDELE	BOUGIE	1
		PAF4-04000011	JUNTA	GASKET	GUARNIZIONE	JOINT	1
		PAF4-04070003	ANODO	ANODE	ANODO	ANODO	1
		REC68T-24251-00	FILTRO COMBUSTIBLE	FUEL FILTER	FILTRO COMBUSTIBILE	FILTRE ESSENCE	1
		REC90430-08020	JUNTA DESAGÜE	DRAIN GASKET	GUARNIZIONE DRENAGGIO	JOINT DE VIDANGE	x 2
		CM6L5-45251-02A	ANODO	ANODE	ANODO	ANODO	1
		PAF4-04000006	JUNTA	GASKET	GUARNIZIONE	JOINT	1
		PAJASOF40431-025	TÓRICA	O-RING	O-RING	JOINT TORIQUE	1
		PAF4-03000018	JUNTA	GASKET	GUARNIZIONE	JOINT	1
		PAF4-03060000	TURBINA	IMPELLER	GIRANTE	TURBINE	1
		PAF4-03000016	PIN	PIN	PIN	PIN	1
		PAGB/T91-1.6X12	PIN BLOQUEADOR	COTTER PIN	COPPIGLIA	GOUPILLE	1

	KIT	REF					
FT8 D/G (2001-14) FT9.9G (2008-12) FT9.9J (2013 +)	RECKITFT8D	NGKBR6HS-10	BUJÍA	SPARK PLUG	CANDELE	BOUGIE	x 2
		PAF4-04070003	ÁNODO	ANODE	ANODO	ANODO	1
		PAJASOF40431-025	TÓRICA	O-RING	O-RING	JOINT TORIQUE	1
		PAGB/T3452.1-13X2	TÓRICA	O-RING	O-RING	JOINT TORIQUE	1
		REC68T-24251-00	FILTRO COMBUSTIBLE	FUEL FILTER	FILTRO COMBUSTIBILE	FILTRE ESSENCE	1
		PAF4-04000030	MUELLE DEL TUBO DE COMBUSTIBLE	SPRING, FUEL PIPE	MOLLA TUBO COMBUSTIBILE	COLLIER TUYAU DE CARBURANT	x 2
		REC09168-12017	ARANDELA	WHASER	RONDELLA	RONDELLE	1
		CM68T-45251-00A	ÁNODO	ANODE	ANODO	ANODO	1
		REC90430-08020	JUNTA DESAGÜE	DRAIN GASKET	GUARNIZIONE DRENAGGIO	JOINT DE VIDANGE	x 2
		REC91490-30025	PIN BLOQUEADOR	COTTER PIN	COPPIGLIA	GOUPILLE	1
		CM61N-45251-01A	ÁNODO	ANODE	ANODO	ANODO	1
		REC68T-W0078-00	KIT BOMBA DE AGUA	WATER PUMP REPAIR KIT	KIT POMPA DELL'ACQUA	KIT POMPE À EAU	1
		CM6E0-45251-11A	ÁNODO	ANODE	ANODO	ANODO	1
F9.9C (1998-08) F15A (1998-07)	RECKITF9.9C	REC5GH-13440-00	FILTRO DE ACEITE	OIL FILTER	FILTRO OLIO	FILTRE D'HUILE	1
		CM66M-11325-00A	ÁNODO	ANODE	ANODO	ANODE	1
		PAF15-07010009	ALOJAMIENTO DEL ÁNODO	SEAL ANODE	ALLOGGIAMENTO ANODO	JOINT D'ANODE	1
		CM15026A	ÁNODO	ANODE	ANODO	ANODE	1
		PAF15-07010018	JUNTA	GASKET	GUARNIZIONE	JOINT	1
		PAJASOF40431-025	TÓRICA	O-RING	O-RING	JOINT TORIQUE	1
		NGKDPR6EA-9	BUJÍA	SPARK PLUG	CANDELE	BOUGIE	x 2
		REC61N-24563-10	FILTRO COMBUSTIBLE	FUEL FILTER	FILTRO COMBUSTIBILE	FILTRE ESSENCE	1
		PAGB/T3452.1-32.5X1.8	ARANDELA	WHASER	RONDELLA	RONDELLE	1
		PAF15-04000003	ARANDELA	WHASER	RONDELLA	RONDELLE	1
		REC90430-08020	JUNTA DESAGÜE	DRAIN GASKET	GUARNIZIONE DRENAGGIO	JOINT DE VIDANGE	x 2
		CM61N-45251-01A	ÁNODO	ANODE	ANODO	ANODO	1
		TEN01136	ÁNODO	ANODE	ANODO	ANODO	1
		REC91490-30025	PIN BLOQUEADOR	COTTER PIN	COPPIGLIA	GOUPILLE	1
		REC63V-W0078-01	KIT BOMBA DE AGUA	WATER PUMP REPAIR KIT	KIT POMPA DELL'ACQUA	KIT POMPE À EAU	1
		CM6E0-45251-11A	ÁNODO	ANODE	ANODO	ANODO	1
F15C (2007+)	RECKITF15C	CM6G8-11325-00A	ÁNODO	ANODE	ANODO	ANODO	x 3
		PAF20-05000702	JUNTA	GASKET	GUARNIZIONE	JOINT	1
		PAGB/T3452.1-13X2	JUNTA	GASKET	GUARNIZIONE	JOINT	1
		REC5GH-13440-60	FILTRO DE ACEITE	OIL FILTER	FILTRO OLIO	FILTRE D'HUILE	1
		PAJASOF40431-025	TÓRICA	O-RING	O-RING	JOINT TORIQUE	1
		NGKDPR6EB-9	BUJÍA	SPARK PLUG	CANDELE	BOUGIE	x 2
		PAF15-07010018	JUNTA	GASKET	GUARNIZIONE	JOINT	1
		REC93210-32738	TÓRICA	O-RING	O-RING	JOINT TORIQUE	1
		CM6E0-45251-11A	ÁNODO	ANODE	ANODO	ANODO	1
		PAF15-04000003	JUNTA	GASKET	GUARNIZIONE	JOINT	1
		TEN01154AL	ÁNODO	ANODE	ANODO	ANODO	1
		REC91490-30025	PIN BLOQUEADOR	COTTER PIN	COPPIGLIA	GOUPILLE	1
		REC90430-08020	JUNTA DESAGÜE	DRAIN GASKET	GUARNIZIONE DRENAGGIO	JOINT DE VIDANGE	x 2
		REC6AH-W0078-00	KIT BOMBA DE AGUA	WATER PUMP REPAIR KIT	KIT POMPA DELL'ACQUA	KIT POMPE À EAU	1
		REC61N-24563-10	FILTRO COMBUSTIBLE	FUEL FILTER	FILTRO COMBUSTIBILE	FILTRE	1
F20A (1998-09)	RECKITF20A	REC5GH-13440-00	FILTRO DE ACEITE	OIL FILTER	FILTRO OLIO	FILTRE D'HUILE	1
		CM62Y-11325-00A	ÁNODO	ANODE	ANODO	ANODE	x 2
		PAF15-07010009	ALOJAMIENTO DEL ÁNODO	SEAL ANODE	ALLOGGIAMENTO ANODO	JOINT D'ANODE	x 2
		PAJASOF40431-025	TÓRICA	O-RING	O-RING	JOINT TORIQUE	1
		REC40145	FILTRO COMBUSTIBLE	FUEL FILTER	FILTRO COMBUSTIBILE	FILTRE ESSENCE	1
		PAF4-04000030	MUELLE DEL TUBO DE COMBUTIBLE	SPRING, FUEL PIPE	MOLLA TUBO COMBUSTIBILE	COLLIER, TUYAU DE CARBURANT	x 2
		CM6E0-45251-11A	ÁNODO	ANODE	ANODO	ANODO	1
		PAF15-04000003	ARANDELA	WHASER	RONDELLA	RONDELLE	1
		CM61N-45251-01A	ÁNODO	ANODE	ANODO	ANODO	1
		REC90430-08020	JUNTA DESAGÜE	DRAIN GASKET	GUARNIZIONE DRENAGGIO	JOINT DE VIDANGE	x 2
		PAGB/T91-1.6X12	PIN BLOQUEADOR	COTTER PIN	COPPIGLIA	GOUPILLE	1
		NGKDPR6EA-9	BUJÍA	SPARK PLUG	CANDELE	BOUGIE	x 2
		REC61N-W0078-11	KIT BOMBA DE AGUA	WATER PUMP REPAIR KIT	KIT POMPA DELL'ACQUA	KIT POMPE À EAU	1
F20B (2007+)	RECKITF20B	PAF4-04070003	ÁNODO	ANODE	ANODO	ANODO	x 3
		REC6AH-12411-00	TERMOSTATO	THERMOSTAT	TERMOSTATO	THERMOSTAT	1
		PAF20-05000702	JUNTA	GASKET	GUARNIZIONE	JOINT	1
		CM15026A	ÁNODO	ANODE	ANODO	ANODO	1
		REC5GH-13440-60	FILTRO DE ACEITE	OIL FILTER	FILTRO OLIO	FILTRE D'HUILE	1
		NGKDPR6EB-9	BUJÍA	SPARK PLUG	CANDELE	BOUGIE	x 2
		REC61N-24563-10	FILTRO COMBUSTIBLE	FUEL FILTER	FILTRO COMBUSTIBILE	FILTRE ESSENCE	1
		REC93210-32738	TÓRICA	O-RING	O-RING	JOINT TORIQUE	1
		PAF15-04000003	ARANDELA	WHASER	RONDELLA	RONDELLE	1
		REC90430-08020	JUNTA DESAGÜE	DRAIN GASKET	GUARNIZIONE DRENAGGIO	JOINT DE VIDANGE	x 2
		TEN01154AL	ÁNODO	ANODE	ANODO	ANODO	1
		REC6AH-W0078-00	KIT BOMBA DE AGUA	WATER PUMP REPAIR KIT	KIT POMPA DELL'ACQUA	KIT POMPE À EAU	1

	KIT	REF					
F25A (1998-09)	RECKITF25A	REC5GH-13440-00	FILTRO DE ACEITE	OIL FILTER	FILTRO OLIO	FILTRE À HUILE	1
		PAF15-07000031	TERMOSTATO	THERMOSTAT	TERMOSTATO	THERMOSTAT	1
		PAF15-07010022	JUNTA	GASKET	GUARNIZIONE	JOINT	1
		CM62Y-11325-00A	ANODO	ANODE	ANODO	ANODO	x 3
		PAF15-07010009	ALOJAMIENTO DEL ÁNODO	SEAL ANODE	ALLOGGIAMENTO ANODO	JOINT D'ANODE	x 2
		REC61N-24563-10	FILTRO COMBUSTIBLE	FUEL FILTER	FILTRO COMBUSTIBILE	FILTRE ESSENCE	1
		REC93210-32738	TÓRICA	O-RING	O-RING	JOINT TORIQUE	1
		NGKDPR6EA-9	BUJÍA	SPARK PLUG	CANDELE	BOUGIE	x 2
		CM6E0-45251-11A	ANODO	ANODE	ANODO	ANODO	1
		PAF15-04000003	ARANDELA	WHASER	RONDELLA	RONDELLE	1
		CM61N-45251-01A	ANODO	ANODE	ANODO	ANODO	1
		REC90430-08020	JUNTA DESAGÜE	DRAIN GASKET	GUARNIZIONE DRENAGGIO	JOINT DE VIDANGE	x 2
		PAGB/T91-1.6X12	PIN BLOQUEADOR	COTTER PIN	COPPIGLIA	GOUPILLE	1
		REC61N-W0078-11	KIT BOMBA DE AGUA	WATER PUMP REPAIR KIT	KIT POMPA DELL'ACQUA	KIT POMPE À EAU	1
FT25B (2000-09)	RECKITFT25B	REC5GH-13440-00	FILTRO DE ACEITE	OIL FILTER	FILTRO OLIO	FILTRE À HUILE	1
		PAF15-07000031	TERMOSTATO	THERMOSTAT	TERMOSTATO	THERMOSTAT	1
		PAF15-07010022	JUNTA	GASKET	GUARNIZIONE	JOINT	1
		CM62Y-11325-00A	ANODO	ANODE	ANODO	ANODO	x 3
		PAF15-07010009	ALOJAMIENTO DEL ÁNODO	SEAL ANODE	ALLOGGIAMENTO ANODO	JOINT D'ANODE	x 2
		REC61N-24563-10	FILTRO COMBUSTIBLE	FUEL FILTER	FILTRO COMBUSTIBILE	FILTRE ESSENCE	1
		REC93210-32738	TÓRICA	O-RING	O-RING	JOINT TORIQUE	1
		NGKDPR6EA-9	BUJÍA	SPARK PLUG	CANDELE	BOUGIE	x 2
		CM6E0-45251-11A	ANODO	ANODE	ANODO	ANODO	1
		PAF15-04000003	ARANDELA	WHASER	RONDELLA	RONDELLE	1
		CM67C-45371-00A	ANODO	ANODE	ANODO	ANODO	1
		REC90430-08020	JUNTA DESAGÜE	DRAIN GASKET	GUARNIZIONE DRENAGGIO	JOINT DE VIDANGE	x 2
		PAGB/T91-1.6X12	PIN BLOQUEADOR	COTTER PIN	COPPIGLIA	GOUPILLE	1
		REC66T-W0078-00	KIT BOMBA DE AGUA	WATER PUMP REPAIR KIT	KIT POMPA DELL'ACQUA	KIT POMPE À EAU	1
		CM67C-45251-00A	ANODO	ANODE	ANODO	ANODO	1
F25 G (2017+)	RECKITF25G	PAF4-04070003	ANODO	ANODE	ANODO	ANODE	x 4
		REC6FM-12411-00	TERMOSTATO	THERMOSTAT	TERMOSTATO	THERMOSTAT	1
		REC5GH-13440-60	FILTRO ACEITE	OIL FILTER	FILTRO OLIO	FILTRO À HUILE	1
		NGKDPR6EB-9	BUJÍA	SPARK PLUG	CANDELE	BOUGIE	x 2
		REC6D8-WS24A-00	FILTRO COMBUSTIBLE	FUEL FILTER	FILTRO COMBUSTIBILE	FILTRE ESSENCE	1
		PAGB/T3452.1-32.5X1.8	TÓRICA	O-RING	O-RING	JOINT TORIQUE	1
		PAF4-04000006	ARANDELA	WHASER	RONDELLA	RONDELLE	1
		PAF15-04000003	ARANDELA	WHASER	RONDELLA	RONDELLE	1
		CM6E5-45251-00A	ANODO	ANODE	ANODO	ANODE	1
		CM664-45371-01A	ANODO	ANODE	ANODO	ANODE	1
		REC90430-08020	JUNTA DESAGÜE	DRAIN GASKET	GUARNIZIONE DRENAGGIO	JOINT DE VIDANGE	x 2
		PAF25-04050004	GOMA SELLO DE AGUA	DAMPER WATER PIPE	AMMORTIZZATORE, TUBO DELL'ACQUA	MANCHON TUYAU D'EAU	1
		REC6L2-44352-00	TURBINA	IMPELLER	GIRANTE	TURBINE	1
		PAF25-04050003	TÓRICA	O-RING	O-RING	JOINT TORIQUE	1
		PAGB/T91-1.6X12	PIN BLOQUEADOR	COTTER PIN	COPPIGLIA	GOUPILLE	1
F25D (2009+)	RECKITF25D	PAF15-07000031	TERMOSTATO	THERMOSTAT	TERMOSTATO	THERMOSTAT	1
		PAF15-07010022	JUNTA	GASKET	GUARNIZIONE	JOINT	1
		PAF4-04070003	ANODO	ANODE	ANODO	ANODE	1
		REC5GH-13440-60	FILTRO ACEITE	OIL FILTER	FILTRO OLIO	FILTRE À HUILE	1
		CM6BL-11325-00A	ANODO	ANODE	ANODO	ANODE	x 2
		NGKDPR6EB-9	BUJÍA	SPARK PLUG	CANDELE	BOUGIE	x 2
		REC61N-24563-10	FILTRO COMBUSTIBLE	FUEL FILTER	FILTRO COMBUSTIBILE	FILTRE ESSENCE	1
		PAGB/T3452.1-32.5X1.8	TÓRICA	O-RING	O-RING	JOINT TORIQUE	1
		CM62Y-11325-00A	ANODO	ANODE	ANODO	ANODE	1
		PAF15-04000003	ARANDELA	WHASER	RONDELLA	RONDELLE	1
		REC90430-08020	JUNTA DESAGÜE	DRAIN GASKET	GUARNIZIONE DRENAGGIO	JOINT DE VIDANGE	x 2
		CM61N-45251-01A	ANODO	ANODE	ANODO	ANODE	1
		REC61N-W0078-11	KIT BOMBA DE AGUA	WATER PUMP REPAIR KIT	KIT POMPA DELL'ACQUA	KIT POMPE À EAU	1
		PAGB/T91-1.6X12	PIN BLOQUEADOR	COTTER PIN	COPPIGLIA	GOUPILLE	1
FT25F (2009+)	RECKITFT25F	PAF15-07000031	TERMOSTATO	THERMOSTAT	TERMOSTATO	THERMOSTAT	1
		PAF15-07010022	JUNTA	GASKET	GUARNIZIONE	JOINT	1
		PAF4-04070003	ANODO	ANODE	ANODO	ANODE	1
		REC5GH-13440-60	FILTRO ACEITE	OIL FILTER	FILTRO OLIO	FILTRE À HUILE	1
		CM6BL-11325-00A	ANODO	ANODE	ANODO	ANODE	x 2
		NGKDPR6EB-9	BUJÍA	SPARK PLUG	CANDELE	BOUGIE	x 2
		REC61N-24563-10	FILTRO COMBUSTIBLE	FUEL FILTER	FILTRO COMBUSTIBILE	FILTRE ESSENCE	1
		PAGB/T3452.1-32.5X1.8	TÓRICA	O-RING	O-RING	JOINT TORIQUE	1
		CM6E0-45251-11A	ANODO	ANODE	ANODO	ANODE	1
		CM62Y-11325-00A	ANODO	ANODE	ANODO	ANODE	1
		PAF15-04000003	ARANDELA	WHASER	RONDELLA	RONDELLE	1
		REC90430-08020	JUNTA DESAGÜE	DRAIN GASKET	GUARNIZIONE DRENAGGIO	JOINT DE VIDANGE	x 2
		CM67C-45371-00A	ANODO	ANODE	ANODO	ANODE	
		PAGB/T91-1.6X12	PIN BLOQUEADOR	COTTER PIN	COPPIGLIA	GOUPILLE	1
		CM67C-45251-00A	ANODO	ANODE	ANODO	ANODE	1
		REC66T-W0078-00	KIT BOMBA DE AGUA	WATER PUMP REPAIR KIT	KIT POMPA DELL'ACQUA	KIT POMPE À EAU	1

	KIT	REF					
F30A (2001-09)	RECKITF30A	PAF15-07000031	TERMOSTATO	THERMOSTAT	TERMOSTATO	THERMOSTAT	1
		PAF15-07010022	JUNTA	GASKET	GUARNIZIONE	JOINT	1
		NGKDPR6EA-9	BUJÍA	SPARK PLUG	CANDELE	BOUGIE	x 3
		REC5GH-13440-00	FILTRO ACEITE	OIL FILTER	FILTRO OLIO	FILTRE À HUILE	1
		CM62Y-11325-00A	ANODO	ANODE	ANODO	ANODE	x 4
		PAF15-07010009	ALOJAMIENTO DEL ANODO	SEAL ANODE	ALLOGGIAMENTO ANODO	JOINT D'ANODE	x 4
		REC40145	FILTRO COMBUSTIBLE	FUEL FILTER	FILTRO COMBUSTIBILE	FILTRE ESSENCE	1
		PAF4-04000030	MUELLE DEL TUBO DE COMBUTIBLE	SPRING, FUEL PIPE	MOLLA TUBO COMBUSTIBILE	COLLIER TUYAU DE CARBURANT	x 2
		CM688-45251-01A	ANODO	ANODE	ANODO	ANODE	1
		PAF15-04000003	ARANDELA	WHASER	RONDELLA	RONDELLE	1
		REC90430-08020	JUNTA DESAGÜE	DRAIN GASKET	GUARNIZIONE DRENAGGIO	JOINT DE VIDANGE	x 2
		CM67C-45251-00A	ANODO	ANODE	ANODO	ANODE	1
		CM67C-45371-00A	ANODO	ANODE	ANODO	ANODE	1
		REC91490-30025	PIN BLOQUEADOR	COTTER PIN	COPPIGLIA	GOUPILLE	1
		REC66T-W0078-00	KIT BOMBA DE AGUA	WATER PUMP REPAIR KIT	KIT POMPA DELL'ACQUA	KIT POMPE À EAU	1
F30B (2009+) F40F (2009+)	RECKITF30B	PAF15-07000031	TERMOSTATO	THERMOSTAT	TERMOSTATO	THERMOSTAT	1
		PAF15-07010022	JUNTA	GASKET	GUARNIZIONE	JOINT	1
		PAF4-04070003	ANODO	ANODE	ANODO	ANODE	x 4
		REC5GH-13440-60	FILTRO DE ACEITE	OIL FILTER	FILTRO OLIO	FILTRE À HUILE	1
		NGKDPR6EB-9	BUJÍA	SPARK PLUG	CANDELE	BOUGIE	x 3
		REC6BG-13915-00	FILTRO COMBUSTIBLE VST	FUEL FILTER VST	FILTRO COMBUSTIBILE VST	FILTRE ESSENCE VST	1
		REC6C5-24251-00	FILTRO COMBUSTIBLE	FUEL FILTER	FILTRO COMBUSTIBILE	FILTRE ESSENCE	1
		REC6D8-WS24A-00	FILTRO COMBUSTIBLE	FUEL FILTER	FILTRO COMBUSTIBLE	FILTRE ESSENCE	1
		PAGB/T3452.1-32.5X1.8	TÓRICA	O-RING	O-RING	JOINT TORIQUE	1
		CM6E0-45251-11A	ANODO	ANODE	ANODO	ANODE	1
		CM688-45251-01A	ANODO	ANODE	ANODO	ANODE	1
		CM62Y-11325-00A	ANODO	ANODE	ANODO	ANODE	1
		PAF15-04000003	ARANDELA	WHASER	RONDELLA	RONDELLE	1
		REC90430-08020	JUNTA DESAGÜE	DRAIN GASKET	GUARNIZIONE DRENAGGIO	JOINT DE VIDANGE	x 2
		CM67C-45371-00A	ANODO	ANODE	ANODO	ANODE	1
		CM67C-45251-00A	ANODO	ANODE	ANODO	ANODE	1
		REC6BG-W0078-00	KIT BOMBA DE AGUA	WATER PUMP REPAIR KIT	KIT POMPA DELL'ACQUA	KIT POMPE À EAU	1
		REC91490-30025	PIN BLOQUEADOR	COTTER PIN	SPINOTTO	PIN	1
F40B (2000-09)	RECKITF40B	PAF15-07000031	TERMOSTATO	THERMOSTAT	TERMOSTATO	THERMOSTAT	1
		PAF15-07010022	JUNTA	GASKET	GUARNIZIONE	JOINT	1
		REC3FV-13440-00	FILTRO DE ACEITE	OIL FILTER	FILTRO OLIO	FILTRE À HUILE	1
		CM62Y-11325-00A	ANODO	ANODE	ANODO	ANODE	x 3
		PAF15-07010009	ALOJAMIENTO DEL ANODO	SEAL ANODE	ALLOGGIAMENTO ANODO	JOINT D'ANODE	x 3
		NGKDPR6EA-9	BUJÍA	SPARK PLUG	CANDELE	BOUGIE	x 3
		REC40145	FILTRO COMBUSTIBLE	FUEL FILTER	FILTRO COMBUSTIBLE	FILTRE ESSENCE	1
		PAF4-04000030	MUELLE DEL TUBO DE COMBUTIBLE	SPRING, FUEL PIPE	MOLLA TUBO COMBUSTIBILE	COLLIER TUYAU DE CARBURANT	x 2
		CM688-45251-01A	ANODO	ANODE	ANODO	ANODE	1
		CM6E0-45251-11A	ANODO	ANODE	ANODO	ANODE	1
		PAF15-04000003	ARANDELA	WHASER	RONDELLA	RONDELLE	1
		REC90430-08020	JUNTA DESAGÜE	DRAIN GASKET	GUARNIZIONE DRENAGGIO	JOINT DE VIDANGE	x 2
		CM67C-45371-00A	ANODO	ANODE	ANODO	ANODE	1
		CM67C-45251-00A	ANODO	ANODE	ANODO	ANODE	1
		REC91490-30025	PIN BLOQUEADOR	COTTER PIN	COPPIGLIA	GOUPILLE	1
		REC66T-W0078-00	KIT BOMBA DE AGUA	WATER PUMP REPAIR KIT	KIT POMPA DELL'ACQUA	KIT POMPE À EAU	1
F50A (1991-07)	RECKITF50A	PAF15-07000031	TERMOSTATO	THERMOSTAT	TERMOSTATO	THERMOSTAT	1
		PAF15-07010022	JUNTA	GASKET	GUARNIZIONE	JOINT	1
		PAF4-04070003	ANODO	ANODE	ANODO	ANODO	x 4
		REC5GH-13440-60	FILTRO DE ACEITE	OIL FILTER	FILTRO OLIO	FILTRE À HUILE	1
		NGKDPR6EB-9	BUJÍA	SPARK PLUG	CANDELE	BOUGIE	x 4
		REC6BG-13915-00	FILTRO COMBUSTIBLE VST	FUEL FILTER VST	FILTRO COMBUSTIBILE VST	FILTRE VST	1
		REC6C5-24251-00	FILTRO COMBUSTIBLE	FUEL FILTER	FILTRO COMBUSTIBILE	FILTRE ESSENCE	1
		REC6D8-WS24A-00	FILTRO COMBUSTIBLE	FUEL FILTER	FILTRO COMBUSTIBLE	FILTRE ESSENCE	1
		PAGB/T3452.1-32.5X1.8	TÓRICA	O-RING	O-RING	JOINT TORIQUE	1
		CM6E0-45251-11A	ANODO	ANODE	ANODO	ANODE	1
		CM688-45251-01A	ANODO	ANODE	ANODO	ANODE	1
		CM62Y-11325-00A	ANODO	ANODE	ANODO	ANODE	1
		PAF15-04000003	ARANDELA	WHASER	RONDELLA	RONDELLE	1
		REC90430-08020	JUNTA DESAGÜE	DRAIN GASKET	GUARNIZIONE DRENAGGIO	JOINT DE VIDANGE	x 2
		CM67C-45371-00A	ANODO	ANODE	ANODO	ANODE	1
		CM67C-45251-00A	ANODO	ANODE	ANODO	ANODE	1
		REC6BG-W0078-00	KIT BOMBA DE AGUA	WATER PUMP REPAIR KIT	KIT POMPA DELL'ACQUA	KIT POMPE À EAU	1
		REC91490-30025	PIN BLOQUEADOR	COTTER PIN	COPPIGLIA	GOUPILLE	1

	KIT	REF					
FT50B (1996-02)	RECKITFT50B	PAF15-07000031	TERMOSTATO	THERMOSTAT	TERMOSTATO	THERMOSTAT	1
		PAF15-07010022	JUNTA	GASKET	GUARNIZIONE	JOINT	1
		REC5GH-13440-00	FILTRO DE ACEITE	OIL FILTER	FILTRO OLIO	FILTRE À HUILE	1
		CM62Y-11325-00A	ANODO	ANODE	ANODO	ANODE	x 5
		PAF15-07010009	ALOJAMIENTO DEL ÁNODO	SEAL ANODE	ALLOGGIAMENTO ANODO	JOINT D'ANODE	x 5
		NGKDPR6EA-9	BUJÍA	SPARK PLUG	CANDELE	BOUGIE	x 4
		REC68V-24563-00	FILTRO COMBUSTIBLE	FUEL FILTER	FILTRO COMBUSTIBLE	FILTRE	1
		REC93210-32738	TÓRICA	O-RING	O-RING	JOINT TORIQUE	1
		CM6E0-45251-11A	ANODO	ANODE	ANODO	ANODE	x 3
		PAF15-04000003	ARANDELA	WHASER	RONDELLA	RONDELLE	1
		REC90430-08020	JUNTA DESAGÜE	DRAIN GASKET	GUARNIZIONE DRENAGGIO	JOINT DE VIDANGE	x 2
		CM67F-45371-00A	ANODO	ANODE	ANODO	ANODE	1
		REC91490-40030	PIN BLOQUEADOR	COTTER PIN	COPPIGLIA	GOUPILLE	1
		REC6H3-W0078-02	KIT BOMBA DE AGUA	WATER PUMP REPAIR KIT	KIT POMPA DELL'ACQUA	KIT POMPE À EAU	1
FT50C (2003+)	RECKITFT50C	PAF15-07000031	TERMOSTATO	THERMOSTAT	TERMOSTATO	THERMOSTAT	1
		PAF15-07010022	JUNTA	GASKET	GUARNIZIONE	JOINT	1
		CM62Y-11325-00A	ANODO	ANODE	ANODO	ANODE	x 5
		PAF15-07010009	ALOJAMIENTO DEL ÁNODO	SEAL ANODE	ALLOGGIAMENTO ANODO	JOINT D'ANODE	x 5
		NGKDPR6EA-9	BUJÍA	SPARK PLUG	CANDELE	BOUGIE	x 4
		REC5GH-13440-00	FILTRO DE ACEITE	OIL FILTER	FILTRO OLIO	FILTRE À HUILE	1
		REC61N-24563-10	FILTRO COMBUSTIBLE	FUEL FILTER	FILTRO COMBUSTIBILE	FILTRE ESSENCE	1
		PAGB/T3452.1-32.5X1.8	TÓRICA	O-RING	O-RING	JOINT TORIQUE	1
		CM6E0-45251-11A	ANODO	ANODE	ANODO	ANODE	x 3
		PAF15-04000003	ARANDELA	WHASER	RONDELLA	RONDELLE	1
		REC90430-08020	JUNTA DESAGÜE	DRAIN GASKET	GUARNIZIONE DRENAGGIO	JOINT DE VIDANGE	x 2
		CM67F-45371-00A	ANODO	ANODE	ANODO	ANODE	1
		REC91490-40030	PIN BLOQUEADOR	COTTER PIN	COPPIGLIA	GOUPILLE	1
		REC6H3-W0078-02	KIT BOMBA DE AGUA	WATER PUMP REPAIR KIT	KIT POMPA DELL'ACQUA	KIT POMPE À EAU	1
F50F (2005-12)	RECKITF50F	PAF15-07000031	TERMOSTATO	THERMOSTAT	TERMOSTATO	THERMOSTAT	1
		PAF15-07010022	JUNTA	GASKET	GUARNIZIONE	JOINT	1
		CM62Y-11325-00A	ANODO	ANODE	ANODO	ANODE	x 5
		PAF15-07010009	ALOJAMIENTO DEL ÁNODO	SEAL ANODE	ALLOGGIAMENTO ANODO	JOINT D'ANODE	x 5
		REC5GH-13440-00	FILTRO DE ACEITE	OIL FILTER	FILTRO OLIO	FILTRE À HUILE	1
		NGKDPR6EB-9	BUJÍA	SPARK PLUG	CANDELE	BOUGIE	x 4
		REC6C5-13915-00	FILTRO COMBUSTIBLE VST	FUEL FILTER VST	FILTRO COMBUSTIBILE VST	FILTRE VST	1
		REC6C5-14984-00	TÓRICA VST	VST O-RING	O-RING VST	JOINT TORIQUE VST	1
		REC6C5-24251-00	FILTRO COMBUSTIBLE	FUEL FILTER	FILTRO COMBUSTIBILE	FILTRE ESSENCE	1
		REC68V-24563-00	FILTRO COMBUSTIBLE	FUEL FILTER	FILTRO COMBUSTIBILE	FILTRE ESSENCE	1
		REC93210-32738	TÓRICA	O-RING	O-RING	JOINT TORIQUE	1
		CM6E0-45251-11A	ANODO	ANODE	ANODO	ANODE	x 2
		CM688-45251-01A	ANODO	ANODE	ANODO	ANODE	1
		PAF15-04000003	ARANDELA	WHASER	RONDELLA	RONDELLE	1
		REC90430-08020	JUNTA DESAGÜE	DRAIN GASKET	GUARNIZIONE DRENAGGIO	JOINT DE VIDANGE	x 2
		CM67C-45371-00A	ANODO	ANODE	ANODO	ANODE	1
		CM67C-45251-00A	ANODO	ANODE	ANODO	ANODE	1
		REC91490-30025	PIN BLOQUEADOR	COTTER PIN	COPPIGLIA	GOUPILLE	1
		REC63D-W0078-01	KIT BOMBA DE AGUA	WATER PUMP REPAIR KIT	KIT POMPA DELL'ACQUA	KIT POMPE À EAU	1
FT50G (2005-12) FT50J (2013+) FT60D (2005-12) FT60G (2013+)	RECKITFT50G	PAF15-07000031	TERMOSTATO	THERMOSTAT	TERMOSTATO	THERMOSTAT	1
		PAF15-07010022	JUNTA	GASKET	GUARNIZIONE	JOINT	1
		REC5GH-13440-60	FILTRO DE ACEITE	OIL FILTER	FILTRO OLIO	FILTRE À HUILE	1
		CM62Y-11325-00A	ANODO	ANODE	ANODO	ANODE	1
		PAF15-07010009	ALOJAMIENTO DEL ÁNODO	SEAL ANODE	ALLOGGIAMENTO ANODO	JOINT D'ANODE	1
		NGKDPR6EB-9	BUJÍA	SPARK PLUG	CANDELE	BOUGIE	x 4
		PAF4-04070003	ANODO	ANODE	ANODO	ANODE	x 4
		PAGB/T3452.1-13X2	TÓRICA	O-RING	O-RING	JOINT TORIQUE	x 4
		REC6C5-13915-00	FILTRO COMBUSTIBLE VST	FUEL FILTER VST	FILTRO COMBUSTIBILE VST	FILTRE ESSENCE VST	1
		REC6C5-14984-00	TÓRICA VST	VST O-RING	O-RING VST	JOINT TORIQUE VST	1
		REC6C5-24251-00	FILTRO COMBUSTIBLE	FUEL FILTER	FILTRO COMBUSTIBILE	FILTRE ESSENCE	1
		REC6D8-WS24A-00	FILTRO COMBUSTIBLE	FUEL FILTER	FILTRO COMBUSTIBILE	FILTRE ESSENCE	1
		PAGB/T3452.1-32.5X1.8	TÓRICA	O-RING	O-RING	JOINT TORIQUE	1
		CM6E0-45251-11A	ANODO	ANODE	ANODO	ANODO	x 3
		PAF15-04000003	ARANDELA	WHASER	RONDELLA	RONDELLE	1
		REC90430-08020	JUNTA DESAGÜE	DRAIN GASKET	GUARNIZIONE DRENAGGIO	JOINT DE VIDANGE	x 2
		CM67F-45371-00A	ANODO	ANODE	ANODO	ANODE	1
		REC91490-40030	PIN BLOQUEADOR	COTTER PIN	COPPIGLIA	GOUPILLE	1
		REC6H3-W0078-02	KIT BOMBA DE AGUA	WATER PUMP REPAIR KIT	KIT POMPA DELL'ACQUA	KIT POMPE À EAU	1

	KIT	REF					
F50H (2013+) F60A (2002-07) F60C (2005-12) F60F (2013+)	RECKITF60A	PAF15-07010009	ALOJAMIENTO DEL ÁNODO	SEAL ANODE	ALLOGGIAMENTO ANODO	JOINT D'ANODE	1
		REC5GH-13440-60	FILTRO DE ACEITE	OIL FILTER	FILTRO OLIO	FILTRE À HUILE	1
		PAF4-04070003	ANODO	ANODE	ANODO	ANODE	x 4
		PAGB/T3452.1-13X2	TÓRICA	O-RING	O-RING	JOINT TORIQUE	x 4
		NGKDPR6EB-9	BUJÍA	SPARK PLUG	CANDELE	BOUGIE	x 4
		REC6C5-13915-00	FILTRO COMBUSTIBLE VST	FUEL FILTER VST	FILTRO COMBUSTIBILE VST	FILTRE VST	1
		REC6C5-14984-00	TÓRICA VST	VST O-RING	O-RING VST	JOINT TORIQUE VST	1
		REC6C5-24251-00	FILTRO COMBUSTIBLE	FUEL FILTER	FILTRO COMBUSTIBILE	FILTRE ESSENCE	1
		REC6D8-WS24A-00	FILTRO COMBUSTIBLE	FUEL FILTER	FILTRO COMBUSTIBILE	FILTRE ESSENCE	1
		REC93210-32738	TÓRICA	O-RING	O-RING	JOINT TORIQUE	1
		CM6E0-45251-11A	ANODO	ANODE	ANODO	ANODE	x 4
		CM688-45251-01A	ANODO	ANODE	ANODO	ANODE	1
		PAF15-04000003	ARANDELA	WHASER	RONDELLA	RONDELLE	1
		REC90430-08020	JUNTA DESAGÜE	DRAIN GASKET	GUARNIZIONE DRENAGGIO	JOINT DE VIDANGE	x 2
		CM67C-45371-00A	ANODO	ANODE	ANODO	ANODE	1
		CM67C-45251-00A	ANODO	ANODE	ANODO	ANODE	1
		REC91490-30025	PIN BLOQUEADOR	COTTER PIN	COPPIGLIA	GOUPILLE	1
		REC63D-W0078-01	KIT BOMBA DE AGUA	WATER PUMP REPAIR KIT	KIT POMPA DELL'ACQUA	KIT POMPE À EAU	1
FT60B (2003-06)	RECKITFT60B	PAF15-07000031	TERMOSTATO	THERMOSTAT	TERMOSTATO	THERMOSTAT	1
		PAF15-07010022	JUNTA	GASKET	GUARNIZIONE	JOINT	1
		CM62Y-11325-00A	ANODO	ANODE	ANODO	ANODE	x 5
		PAF15-07010009	ALOJAMIENTO DEL ÁNODO	SEAL ANODE	ALLOGGIAMENTO ANODO	JOINT D'ANODE	x 5
		REC5GH-13440-60	FILTRO DE ACEITE	OIL FILTER	FILTRO OLIO	FILTRE À HUILE	1
		NGKDPR5EA-9	BUJÍA	SPARK PLUG	CANDELE	BOUGIE	x 4
		REC61N-24563-10	FILTRO COMBUSTIBLE	FUEL FILTER	FILTRO COMBUSTIBILE	FILTRE ESSENCE	1
		PAGB/T3452.1-32.5X1.8	TÓRICA	O-RING	O-RING	JOINT TORIQUE	1
		CM6E0-45251-11A	ANODO	ANODE	ANODO	ANODE	x 3
		PAF15-04000003	ARANDELA	WHASER	RONDELLA	RONDELLE	1
		REC90430-08020	JUNTA DESAGÜE	DRAIN GASKET	GUARNIZIONE DRENAGGIO	JOINT DE VIDANGE	x 2
		CM67F-45371-00A	ANODO	ANODE	ANODO	ANODE	1
		REC91490-40030	PIN BLOQUEADOR	COTTER PIN	COPPIGLIA	GOUPILLE	1
		REC6H3-W0078-02	KIT BOMBA DE AGUA	WATER PUMP REPAIR KIT	KIT POMPA DELL'ACQUA	KIT POMPE À EAU	1
F70A (2011+)	RECKITF70A	PAF15-07000031	TERMOSTATO	THERMOSTAT	TERMOSTATO	THERMOSTAT	1
		PAF15-07010022	JUNTA	GASKET	GUARNIZIONE	JOINT	1
		CM62Y-11325-00A	ANODO	ANODE	ANODO	ANODE	1
		REC5GH-13440-60	FILTRO DE ACEITE	OIL FILTER	FILTRO OLIO	FILTRE À HUILE	1
		PAF4-04070003	ANODO	ANODE	ANODO	ANODE	x 3
		PAGB/T3452.1-13X2	TÓRICA	O-RING	O-RING	JOINT TORIQUE	x 3
		NGKLKR7E	BUJÍA	SPARK PLUG	CANDELE	BOUGIE	x 4
		REC6C5-13915-00	FILTRO COMBUSTIBLE VST	FUEL FILTER VST	FILTRO COMBUSTIBILE VST	FILTRE ESSENCE VST	1
		REC6C5-24251-00	FILTRO COMBUSTIBLE	FUEL FILTER	FILTRO COMBUSTIBILE	FILTRE ESSENCE	1
		REC6D8-WS24A-00	FILTRO COMBUSTIBLE	FUEL FILTER	FILTRO COMBUSTIBILE	FILTRE ESSENCE	1
		REC93210-32738	TÓRICA	O-RING	O-RING	JOINT TORIQUE	1
		CM6E0-45251-11A	ANODO	ANODE	ANODO	ANODE	x 3
		PAF15-04000003	ARANDELA	WHASER	RONDELLA	RONDELLE	1
		REC90430-08020	JUNTA DESAGÜE	DRAIN GASKET	GUARNIZIONE DRENAGGIO	JOINT DE VIDANGE	x 2
		CM67F-45371-00A	ANODO	ANODE	ANODO	ANODE	1
		REC91490-30025	PIN BLOQUEADOR	COTTER PIN	COPPIGLIA	GOUPILLE	1
		REC6CJ-W0078-00	KIT BOMBA DE AGUA	WATER PUMP REPAIR KIT	KIT POMPA DELL'ACQUA	KIT POMPE À EAU	1
F80A (2000-07) F100A (1997-07)	RECKITF80A	CM68V-11325-01A	ANODO	ANODE	ANODO	ANODE	x 2
		REC5GH-13440-00	FILTRO DE ACEITE	OIL FILTER	FILTRO OLIO	FILTRE À HUILE	1
		REC67F-12411-01	TERMOSTATO	THERMOSTAT	TERMOSTATO	THERMOSTAT	1
		NGKLFR5A-11	BUJÍA	SPARK PLUG	CANDELE	BOUGIE	x 4
		PAJASOF40431-025	TÓRICA	O-RING	O-RING	JOINT TORIQUE	1
		REC61N-24563-10	FILTRO COMBUSTIBLE	FUEL FILTER	FILTRO COMBUSTIBILE	FILTRE ESSENCE	1
		PAGB/T3452.1-32.5X1.8	TÓRICA	O-RING	O-RING	JOINT TORIQUE	1
		CM6H1-45251-02A	ANODO	ANODE	ANODO	ANODE	1
		PAF15-04000003	ARANDELA	WHASER	RONDELLA	RONDELLE	1
		REC91490-40030	PIN BLOQUEADOR	COTTER PIN	COPPIGLIA	GOUPILLE	1
		REC90430-08020	JUNTA DESAGÜE	DRAIN GASKET	GUARNIZIONE DRENAGGIO	JOINT DE VIDANGE	x 2
		REC67F-W0078-00	KIT BOMBA DE AGUA	WATER PUMP REPAIR KIT	KIT POMPA DELL'ACQUA	KIT POMPE À EAU	1

	KIT	REF					
F80B (2005+)	RECKITF80B	CM15026A	ANODO	ANODE	ANODO	ANODE	x 3
		CM67F-11325-01A	ANODO	ANODE	ANODO	ANODE	1
		REC5GH-13440-00	FILTRO DE ACEITE	OIL FILTER	FILTRO OLIO	FILTRE À HUILE	1
		CM67F-11325-01A	ANODO	ANODE	ANODO	ANODE	x 2
		PAJASOF40431-025	TÓRICA	O-RING	O-RING	JOINT TORIQUE	1
		REC67F-12411-01	TERMOSTATO	THERMOSTAT	TERMOSTATO	THERMOSTAT	1
		NGKLFR5A-11	BUJÍA	SPARK PLUG	CANDELE	BOUGIE	x 4
		REC6C5-13915-00	FILTRO COMBUSTIBLE	FUEL FILTER	FILTRO COMBUSTIBILE	FILTRE ESSENCE	1
		REC6C5-24251-00	FILTRO COMBUSTIBLE	FUEL FILTER	FILTRO COMBUSTIBILE	FILTRE ESSENCE	1
		REC6D8-WS24A-00	FILTRO COMBUSTIBLE	FUEL FILTER	FILTRO COMBUSTIBILE	FILTRE ESSENCE	1
		PAGB/T3452.1-32.5X1.8	TÓRICA	O-RING	O-RING	JOINT TORIQUE	1
		CM6H1-45251-02A	ANODO	ANODE	ANODO	ANODE	1
		PAF15-04000003	ARANDELA	WHASER	RONDELLA	RONDELLE	1
		REC90430-08020	JUNTA DESAGÜE	DRAIN GASKET	GUARNIZIONE DRENAGGIO	JOINT DE VIDANGE	x 2
		CM67F-45371-00	ANODO	ANODE	ANODO	ANODE	1
		REC91490-40030	PIN BLOQUEADOR	COTTER PIN	COPPIGLIA	GOUPILLE	1
		REC67F-W0078-00	KIT BOMBA DE AGUA	WATER PUMP REPAIR KIT	KIT POMPA DELL'ACQUA	KIT POMPE À EAU	1
F100D (2005+)	RECKITF100D	CM15026A	ANODO	ANODE	ANODO	ANODE	x 3
		CM67F-11325-01A	ANODO	ANODE	ANODO	ANODE	1
		REC5GH-13440-00	FILTRO DE ACEITE	OIL FILTER	FILTRO OLIO	FILTRE À HUILE	1
		CM67F-11325-01A	ANODO	ANODE	ANODO	ANODE	x 2
		PAJASOF40431-025	TÓRICA	O-RING	O-RING	JOINT TORIQUE	1
		REC6D9-12411-00	TERMOSTATO	THERMOSTAT	TERMOSTATO	THERMOSTAT	1
		NGKLFR5A-11	BUJÍA	SPARK PLUG	CANDELE	BOUGIE	x 4
		REC6C5-13915-00	FILTRO COMBUSTIBLE	FUEL FILTER	FILTRO COMBUSTIBILE	FILTRE ESSENCE	1
		REC6C5-24251-00	FILTRO COMBUSTIBLE	FUEL FILTER	FILTRO COMBUSTIBILE	FILTRE ESSENCE	1
		REC6D8-WS24A-00	FILTRO COMBUSTIBLE	FUEL FILTER	FILTRO COMBUSTIBILE	FILTRE ESSENCE	1
		PAGB/T3452.1-32.5X1.8	TÓRICA	O-RING	O-RING	JOINT TORIQUE	1
		CM6H1-45251-02A	ANODO	ANODE	ANODO	ANODE	1
		PAF15-04000003	ARANDELA	WHASER	RONDELLA	RONDELLE	1
		REC90430-08020	JUNTA DESAGÜE	DRAIN GASKET	GUARNIZIONE DRENAGGIO	JOINT DE VIDANGE	x 2
		CM67F-45371-00	ANODO	ANODE	ANODO	ANODE	1
		REC91490-40030	PIN BLOQUEADOR	COTTER PIN	SPINOTTO	PIN	1
		REC67F-W0078-00	KIT BOMBA DE AGUA	WATER PUMP REPAIR KIT	KIT POMPA DELL'ACQUA	KIT POMPE À EAU	1
F100F (2017+)	RECKITF100F	PAF4-04070003	ANODO	ANODE	ANODO	ANODE	x 4
		PAGB/T3452.1-13X2	TÓRICA	O-RING	O-RING	JOINT TORIQUE	x 4
		CM63P-11325-01A	ANODO	ANODE	ANODO	ANODE	1
		REC5GH-13440-00	FILTRO DE ACEITE	OIL FILTER	FILTRO OLIO	FILTRE À HUILE	1
		REC6FP-12411-00	TERMOSTATO	THERMOSTAT	TERMOSTATO	THERMOSTAT	1
		NGKLKR6E-9N	BUJÍA	SPARK PLUG	CANDELE	BOUGIE	x 4
		TEN01165	ANODO	ANODE	ANODO	ANODE	1
		REC6C5-24251-00	FILTRO COMBUSTIBLE	FUEL FILTER	FILTRO COMBUSTIBILE	FILTRE ESSENCE	1
		REC6D8-WS24A-00	FILTRO COMBUSTIBLE	FUEL FILTER	FILTRO COMBUSTIBILE	FILTRE ESSENCE	1
		PAGB/T3452.1-32.5X1.8	TÓRICA	O-RING	O-RING	JOINT TORIQUE	1
		CM6H1-45251-02A	ANODO	ANODE	ANODO	ANODE	1
		PAF15-04000003	ARANDELA	WHASER	RONDELLA	RONDELLE	1
		REC90430-08020	JUNTA DESAGÜE	DRAIN GASKET	GUARNIZIONE DRENAGGIO	JOINT DE VIDANGE	x 2
		CM6E5-45371-01A	ANODO	ANODE	ANODO	ANODE	1
		REC91490-40030	PIN BLOQUEADOR	COTTER PIN	COPPIGLIA	GOUPILLE	1
		REC68V-W0078-00	KIT BOMBA DE AGUA	WATER PUMP REPAIR KIT	KIT POMPA DELL'ACQUA	KIT POMPE À EAU	1
F115A (2000-15)	RECKITF115A	CM15026A	ANODO	ANODE	ANODO	ANODE	x 3
		CM67F-11325-01A	ANODO	ANODE	ANODO	ANODE	1
		REC5GH-13440-00	FILTRO DE ACEITE	OIL FILTER	FILTRO OLIO	FILTRE À HUILE	1
		CM67F-11325-01A	ANODO	ANODE	ANODO	ANODE	x 2
		REC60V-12411-00	TERMOSTATO	THERMOSTAT	TERMOSTATO	THERMOSTAT	1
		NGKLFR6A-11	BUJÍA	SPARK PLUG	CANDELE	BOUGIE	x 4
		REC6CB-24501-01	JUNTA	GASKET	GUARNIZIONE	JOINT	1
		REC6CB-13016-00	TÓRICA	O-RING	O-RING	JOINT TORIQUE	1
		REC63P-13915-00	FILTRO COMBUSTIBLE	FUEL FILTER	FILTRO COMBUSTIBILE	FILTRE ESSENCE	1
		REC6CB-14984-00	TÓRICA	O-RING	O-RING	JOINT TORIQUE	1
		CM6G5-45251-01A	ANODO	ANODE	ANODO	ANODE	1
		REC6D8-WS24A-00	FILTRO COMBUSTIBLE	FUEL FILTER	FILTRO COMBUSTIBILE	FILTRE ESSENCE	1
		PAGB/T3452.1-32.5X1.8	TÓRICA	O-RING	O-RING	JOINT TORIQUE	1
		PAF15-04000003	ARANDELA	WHASER	RONDELLA	RONDELLE	1
		REC90430-08020	JUNTA DESAGÜE	DRAIN GASKET	GUARNIZIONE DRENAGGIO	JOINT DE VIDANGE	x 2
		CM6E5-45371-01A	ANODO	ANODE	ANODO	ANODE	1
		REC91490-40030	PIN BLOQUEADOR	COTTER PIN	COPPIGLIA	GOUPILLE	1
		REC68V-W0078-00	KIT BOMBA DE AGUA	WATER PUMP REPAIR KIT	KIT POMPA DELL'ACQUA	KIT POMPE À EAU	1

	KIT	REF					
F115B (2014+) F130A (2015+)	RECKITF115B	PAF4-04070003	ANODO	ANODE	ANODO	ANODE	x 3
		PAGB/T3452.1-13X2	TÓRICA	O-RING	O-RING	JOINT TORIQUE	x 3
		CM63P-11325-01A	ANODO	ANODE	ANODO	ANODE	1
		REC5GH-13440-00	FILTRO DE ACEITE	OIL FILTER	FILTRO OLIO	FILTRE À HUILE	1
		CM67F-11325-01A	ANODO	ANODE	ANODO	ANODE	1
		NGKLKR6E	BUJÍA	SPARK PLUG	CANDELE	BOUGIE	x 4
		REC6CB-13016-00	TÓRICA	O-RING	O-RING	JOINT TORIQUE	1
		REC63P-13915-00	FILTRO COMBUSTIBLE	FUEL FILTER	FILTRO COMBUSTIBILE	FILTRE ESSENCE	1
		REC6CB-14984-00	TÓRICA	O-RING	O-RING	JOINT TORIQUE	1
		REC6D8-WS24A-00	FILTRO COMBUSTIBLE	FUEL FILTER	FILTRO COMBUSTIBILE	FILTRE ESSENCE	1
		PAGB/T3452.1-32.5X1.8	TÓRICA	O-RING	O-RING	JOINT TORIQUE	1
		CM6H1-45251-02A	ANODO	ANODE	ANODO	ANODE	1
		PAF15-04000003	ARANDELA	WHASER	RONDELLA	RONDELLE	1
		REC90430-08020	JUNTA DESAGÜE	DRAIN GASKET	GUARNIZIONE DRENAGGIO	JOINT DE VIDANGE	x 2
		CM6E5-45371-01A	ANODO	ANODE	ANODO	ANODE	1
		REC91490-40030	PIN BLOQUEADOR	COTTER PIN	COPPIGLIA	GOUPILLE	1
		REC68V-W0078-00	KIT BOMBA DE AGUA	WATER PUMP REPAIR KIT	KIT POMPA DELL'ACQUA	KIT POMPE À EAU	1
F150A (2003+) F150B (2012+) F150D (2015+) F150F (2015+) REGULAR ROTATION	RECKITF150RR	CM63P-11325-11A	ANODO	ANODE	ANODO	ANODE	x 4
		CM63P-11325-01A	ANODO	ANODE	ANODO	ANODE	1
		CM67F-11325-01A	ANODO	ANODE	ANODO	ANODE	x 3
		NGKLFR5A-11	BUJÍA	SPARK PLUG	CANDELE	BOUGIE	x 4
		CM68T-11325-00A	ANODO	ANODE	ANODO	ANODE	x 8
		REC67F-12411-01	TERMOSTATO	THERMOSTAT	TERMOSTATO	THERMOSTAT	1
		REC63P-12414-00	JUNTA	GASKET	GUARNIZIONE	JOINT	1
		REC35-822626Q15	FILTRO DE ACEITE	OIL FILTER	FILTRO OLIO	FILTRE À HUILE	1
		REC63P-14984-00	TÓRICA VST	VST O-RING	O-RING VST	JOINT TORIQUE VST	1
		REC63P-13915-00	FILTRO COMBUSTIBLE	FUEL FILTER	FILTRO COMBUSTIBILE	FILTRE ESSENCE	1
		REC65L-24563-00	FILTRO COMBUSTIBLE	FUEL FILTER	FILTRO COMBUSTIBILE	FILTRE ESSENCE	1
		REC69J-24501-10	FILTRO COMBUSTIBLE	FUEL FILTER	FILTRO COMBUSTIBILE	FILTRE ESSENCE	1
		REC6P3-WS24A-00	FILTRO COMBUSTIBLE	FUEL FILTER	FILTRO COMBUSTIBILE	FILTRE ESSENCE	1
		REC6P3-24564-00	TÓRICA	O-RING	O-RING	JOINT TORIQUE	1
		PAF15-04000003	ARANDELA	WHASER	RONDELLA	RONDELLE	1
		REC90430-08020	JUNTA DESAGÜE	DRAIN GASKET	GUARNIZIONE DRENAGGIO	JOINT DE VIDANGE	x 2
		REC61A-W0078-A1	KIT BOMBA DE AGUA	WATER PUMP REPAIR KIT	KIT POMPA DELL'ACQUA	KIT POMPE À EAU	1
		REC91490-40030	PIN BLOQUEADOR	COTTER PIN	COPPIGLIA	GOUPILLE	1
		CMY150KITA	KIT ÁNODOS	KIT ANODES	KIT ANODI	KIT ANODES	1
F150A (2003+) F150B (2012+) F150D (2015+) F150F (2015+) COUNTER ROTATION	RECKITF150CR	TEN01165	ANODO	ANODE	ANODO	ANODE	1
		CM63P-11325-11A	ANODO	ANODE	ANODO	ANODE	x 4
		CM63P-11325-01A	ANODO	ANODE	ANODO	ANODE	1
		CM67F-11325-01A	ANODO	ANODE	ANODO	ANODE	x 3
		NGKLFR5A-11	BUJÍA	SPARK PLUG	CANDELE	BOUGIE	x 4
		CM68T-11325-00A	ANODO	ANODE	ANODO	ANODE	x 8
		REC67F-12411-01	TERMOSTATO	THERMOSTAT	TERMOSTATO	THERMOSTAT	1
		REC63P-12414-00	JUNTA	GASKET	GUARNIZIONE	JOINT	1
		REC35-822626Q15	FILTRO DE ACEITE	OIL FILTER	FILTRO OLIO	FILTRE À HUILE	1
		REC63P-14984-00	TÓRICA VST	VST O-RING	O-RING VST	JOINT TORIQUE VST	1
		REC63P-13915-00	FILTRO COMBUSTIBLE	FUEL FILTER	FILTRO COMBUSTIBILE	FILTRE ESSENCE	1
		REC65L-24563-00	FILTRO COMBUSTIBLE	FUEL FILTER	FILTRO COMBUSTIBILE	FILTRE ESSENCE	1
		REC69J-24501-10	FILTRO COMBUSTIBLE	FUEL FILTER	FILTRO COMBUSTIBILE	FILTRE ESSENCE	1
		REC6P3-WS24A-00	FILTRO COMBUSTIBLE	FUEL FILTER	FILTRO COMBUSTIBILE	FILTRE ESSENCE	1
		REC6P3-24564-00	TÓRICA	O-RING	O-RING	JOINT TORIQUE	1
		PAF15-04000003	ARANDELA	WHASER	RONDELLA	RONDELLE	1
		REC90430-08020	JUNTA DESAGÜE	DRAIN GASKET	GUARNIZIONE DRENAGGIO	JOINT DE VIDANGE	x 2
		REC61A-W0078-A1	KIT BOMBA DE AGUA	WATER PUMP REPAIR KIT	KIT POMPA DELL'ACQUA	KIT POMPE À EAU	1
		REC91490-40030	PIN BLOQUEADOR	COTTER PIN	COPPIGLIA	GOUPILLE	1
		CMY150CRKITA	KIT ÁNODOS	KIT ANODES	KIT ANODI	KIT ANODES	

	KIT	REF					
F150G (2017+) F175A (2014+) F175C (2017+) F200F (2013+) F200G (2013+)	RECKITF150G	CM67F-11325-01A	ANODO	ANODE	ANODO	ANODE	x 3
		CM15026A	ANODO	ANODE	ANODO	ANODE	x 2
		CM68T-11325-00A	ANODO	ANODE	ANODO	ANODE	x 2
		REC6DA-12411-01	TERMOSTATO	THERMOSTAT	TERMOSTATO	THERMOSTAT	1
		PAF15-04000003	ARANDELA	WHASER	RONDELLA	RONDELLE	1
		REC35-822626Q15	FILTRO DE ACEITE	OIL FILTER	FILTRO OLIO	FILTRE À HUILE	1
		REC6CB-24501-01	FILTRO COMBUSTIBLE	FUEL FILTER	FILTRO COMBUSTIBILE	FILTRE ESSENCE	1
		REC6CB-13016-00	TÓRICA	O-RING	O-RING	JOINT TORIQUE	1
		REC63P-13915-00	FILTRO COMBUSTIBLE	FUEL FILTER	FILTRO COMBUSTIBILE	FILTRE ESSENCE	1
		REC6CB-14984-00	TÓRICA	O-RING	O-RING	JOINT TORIQUE	1
		REC6P3-WS24A-00	FILTRO COMBUSTIBLE	FUEL FILTER	FILTRO COMBUSTIBILE	FILTRE ESSENCE	1
		REC6P3-24564-00	TÓRICA	O-RING	O-RING	JOINT TORIQUE	1
		CM6AW-45251-00A	ANODO	ANODE	ANODO	ANODE	1
		REC90430-08020	JUNTA DESAGÜE	DRAIN GASKET	GUARNIZIONE DRENAGGIO	JOINT DE VIDANGE	x 2
		CM6J9-45371-01A	ANODO	ANODE	ANODO	ANODE	1
		NGKLFR6A-11	BUJÍA	SPARK PLUG	CANDELE	BOUGIE	x 4
		REC61A-W0078-A1	KIT BOMBA DE AGUA	WATER PUMP REPAIR KIT	KIT POMPA DELL'ACQUA	KIT POMPE À EAU	1
		REC91490-40030	PIN BLOQUEADOR	COTTER PIN	COPPIGLIA	GOUPILLE	1
		CM6K1-45371-02A	ANODO	ANODE	ANODO	ANODE	1
F200A (2002-07) F225A (2002-07)	RECKITF200A	REC67F-12411-01	TERMOSTATO	THERMOSTAT	TERMOSTATO	THERMOSTAT	x 2
		REC35-822626Q15	FILTRO DE ACEITE	OIL FILTER	FILTRO OLIO	FILTRE À HUILE	1
		CM15026A	ANODO	ANODE	ANODO	ANODE	x 4
		TEN01156	ANODO	ANODE	ANODO	ANODE	x 2
		NGKLFR5A-11	BUJÍA	SPARK PLUG	CANDELE	BOUGIE	x 6
		CM67F-11325-01A	ÁNODO	ANODE	ANODO	ANODE	x 4
		REC65L-24563-00	FILTRO COMBUSTIBLE	FUEL FILTER	FILTRO COMBUSTIBILE	FILTRE ESSENCE	1
		REC68V-14984-00	TÓRICA VST	VST O-RING	O-RING VST	JOINT TORIQUE VST	1
		REC68V-13915-00	FILTRO COMBUSTIBLE	FUEL FILTER	FILTRO COMBUSTIBILE	FILTRE ESSENCE	1
		REC69J-24501-10	FILTRO COMBUSTIBLE	FUEL FILTER	FILTRO COMBUSTIBILE	FILTRE ESSENCE	1
		REC6P3-WS24A-00	FILTRO COMBUSTIBLE	FUEL FILTER	FILTRO COMBUSTIBILE	FILTRE ESSENCE	1
		REC6P3-24564-00	TÓRICA	O-RING	O-RING	JOINT TORIQUE	1
		PAF15-04000003	ARANDELA	WHASER	RONDELLA	RONDELLE	1
		CMY200250KITA	KIT ÁNODOS	KIT ANODES	KIT ANODI	KIT ANODES	1
		REC90430-08020	JUNTA DESAGÜE	DRAIN GASKET	GUARNIZIONE DRENAGGIO	JOINT DE VIDANGE	x 2
		REC91490-40030	PIN BLOQUEADOR	COTTER PIN	COPPIGLIA	GOUPILLE	1
		REC61A-W0078-A1	KIT BOMBA DE AGUA	WATER PUMP REPAIR KIT	KIT POMPA DELL'ACQUA	KIT POMPE À EAU	1
F200C (2006-12)	RECKITF200C	CM15026A	ANODO	ANODE	ANODO	ANODE	x 6
		REC67F-12411-01	TERMOSTATO	THERMOSTAT	TERMOSTATO	THERMOSTAT	x 2
		REC35-822626Q15	FILTRO DE ACEITE	OIL FILTER	FILTRO OLIO	FILTRE À HUILE	1
		TEN01156	ANODO	ANODE	ANODO	ANODE	x 2
		NGKLFR6A-11	BUJÍA	SPARK PLUG	CANDELE	BOUGIE	x 6
		REC63P-13915-00	FILTRO COMBUSTIBLE	FUEL FILTER	FILTRO COMBUSTIBILE	FILTRE ESSENCE	1
		REC6P2-14984-00	TÓRICA VST	VST O-RING	O-RING VST	JOINT TORIQUE VST	1
		REC69J-24501-10	FILTRO COMBUSTIBLE	FUEL FILTER	FILTRO COMBUSTIBILE	FILTRE ESSENCE	1
		REC6P3-WS24A-00	FILTRO COMBUSTIBLE	FUEL FILTER	FILTRO COMBUSTIBILE	FILTRE ESSENCE	1
		REC6P3-24564-00	TÓRICA	O-RING	O-RING	JOINT TORIQUE	1
		PAF15-04000003	ARANDELA	WHASER	RONDELLA	RONDELLE	1
		REC91490-40030	PIN BLOQUEADOR	COTTER PIN	COPPIGLIA	GOUPILLE	1
		REC90430-08020	JUNTA DESAGÜE	DRAIN GASKET	GUARNIZIONE DRENAGGIO	JOINT DE VIDANGE	x 2
		CMY200250KITA	KIT ÁNODOS	KIT ANODES	KIT ANODI	KIT ANODES	1
		REC61A-W0078-A1	KIT BOMBA DE AGUA	WATER PUMP REPAIR KIT	KIT POMPA DELL'ACQUA	KIT POMPE À EAU	1
F225B (2012+) F200C (2012+)	RECKITF225B	CM15026A	ANODO	ANODE	ANODO	ANODE	x 7
		REC67F-12411-01	TERMOSTATO	THERMOSTAT	TERMOSTATO	THERMOSTAT	x 2
		REC35-822626Q15	FILTRO DE ACEITE	OIL FILTER	FILTRO OLIO	FILTRE À HUILE	1
		CM67F-11325-01A	ÁNODO	ANODE	ANODO	ANODE	x 4
		NGKLFR6A-11	BUJÍA	SPARK PLUG	CANDELE	BOUGIE	x 6
		REC6CB-24501-01	FILTRO COMBUSTIBLE	FUEL FILTER	FILTRO COMBUSTIBILE	FILTRE ESSENCE	1
		REC6CB-13016-00	TÓRICA	O-RING	O-RING	JOINT TORIQUE	1
		REC63P-13915-00	FILTRO COMBUSTIBLE	FUEL FILTER	FILTRO COMBUSTIBILE	FILTRE ESSENCE	1
		REC6P2-14984-00	TÓRICA VST	VST O-RING	O-RING VST	JOINT TORIQUE VST	1
		REC6P3-WS24A-00	FILTRO COMBUSTIBLE	FUEL FILTER	FILTRO COMBUSTIBILE	FILTRE ESSENCE	1
		REC6P3-24564-00	TÓRICA	O-RING	O-RING	JOINT TORIQUE	1
		PAF15-04000003	ARANDELA	WHASER	RONDELLA	RONDELLE	1
		REC91490-40030	PIN BLOQUEADOR	COTTER PIN	COPPIGLIA	GOUPILLE	1
		REC90430-08020	JUNTA DESAGÜE	DRAIN GASKET	GUARNIZIONE DRENAGGIO	JOINT DE VIDANGE	x 2
		CMY200250KITA	KIT ÁNODOS	KIT ANODES	KIT ANODI	KIT ANODES	1
		REC61A-W0078-A1	KIT BOMBA DE AGUA	WATER PUMP REPAIR KIT	KIT POMPA DELL'ACQUA	KIT POMPE À EAU	1

	KIT	REF					
F225C (2009-15) F250A (2006-13)	RECKITF225C	CM15026A	ANODO	ANODE	ANODO	ANODE	x 7
		REC67F-12411-01	TERMOSTATO	THERMOSTAT	TERMOSTATO	THERMOSTAT	x 2
		REC35-822626Q15	FILTRO DE ACEITE	OIL FILTER	FILTRO OLIO	FILTRE À HUILE	1
		CM67F-11325-01A	ÁNODO	ANODE	ANODO	ANODE	x 4
		NGKLFR6A-11	BUJÍA	SPARK PLUG	CANDELE	BOUGIE	x 6
		REC6CB-24501-01	FILTRO COMBUSTIBLE	FUEL FILTER	FILTRO COMBUSTIBILE	FILTRE ESSENCE	1
		REC6CB-13016-00	TÓRICA	O-RING	O-RING	JOINT TORIQUE	1
		REC63P-13915-00	FILTRO COMBUSTIBLE	FUEL FILTER	FILTRO COMBUSTIBILE	FILTRE ESSENCE	1
		REC6P2-14984-00	TÓRICA VST	VST O-RING	O-RING VST	JOINT TORIQUE VST	1
		REC6P3-WS24A-00	FILTRO COMBUSTIBLE	FUEL FILTER	FILTRO COMBUSTIBILE	FILTRE ESSENCE	1
		REC6P3-24564-00	TÓRICA	O-RING	O-RING	JOINT TORIQUE	1
		PAF15-04000003	ARANDELA	WHASER	RONDELLA	RONDELLE	1
		REC91490-40030	PIN BLOQUEADOR	COTTER PIN	COPPIGLIA	GOUPILLE	1
		REC90430-08020	JUNTA DESAGÜE	DRAIN GASKET	GUARNIZIONE DRENAGGIO	JOINT DE VIDANGE	x 2
		CMY200250KITA	KIT ÁNODOS	KIT ANODES	KIT ANODI	KIT ANODES	1
		REC6P2-W0078-00	KIT BOMBA DE AGUA	WATER PUMP REPAIR KIT	KIT POMPA DELL'ACQUA	KIT POMPE À EAU	1
F225F (2011+) F225B (2009+) F250D (2011+) F300B (2011+) F300C (2018+)	RECKITF250D	REC6CE-12411-00	TERMOSTATO	THERMOSTAT	TERMOSTATO	THERMOSTAT	x 2
		TEN01177	ANODO	ANODE	ANODO	ANODE	x 4
		CM68T-11325-00A	ANODO	ANODE	ANODO	ANODE	x 2
		TEN01171	ANODO	ANODE	ANODO	ANODE	x 2
		RECN26-13440-00	FILTRO DE ACEITE	OIL FILTER	FILTRO OLIO	FILTRE À HUILE	1
		CM67F-11325-01A	ANODO	ANODE	ANODO	ANODE	x 8
		NGKLFR6A-11	BUJÍA	SPARK PLUG	CANDELE	BOUGIE	x 6
		REC6CB-24501-01	FILTRO COMBUSTIBLE	FUEL FILTER	FILTRO COMBUSTIBILE	FILTRE ESSENCE	1
		REC6CB-13016-00	TÓRICA	O-RING	O-RING	JOINT TORIQUE	1
		REC63P-13915-00	FILTRO COMBUSTIBLE	FUEL FILTER	FILTRO COMBUSTIBILE	FILTRE ESSENCE	1
		REC6CB-14984-00	TÓRICA VST	VST O-RING	O-RING VST	JOINT TORIQUE VST	1
		REC6P3-24564-00	TÓRICA	O-RING	O-RING	JOINT TORIQUE	1
		REC6P3-WS24A-00	FILTRO COMBUSTIBLE	FUEL FILTER	FILTRO COMBUSTIBILE	FILTRE ESSENCE	1
		PAF15-04000003	ARANDELA	WHASER	RONDELLA	RONDELLE	1
		REC91490-40030	PIN BLOQUEADOR	COTTER PIN	COPPIGLIA	GOUPILLE	1
		REC90430-08020	JUNTA DESAGÜE	DRAIN GASKET	GUARNIZIONE DRENAGGIO	JOINT DE VIDANGE	x 2
		CMY200250KITA	KIT ÁNODOS	KIT ANODES	KIT ANODI	KIT ANODES	1
		REC6CE-W0078-01	KIT BOMBA DE AGUA	WATER PUMP REPAIR KIT	KIT POMPA DELL'ACQUA	KIT POMPE À EAU	1
F300A (2008-11)	RECKITF300A	REC6AW-12411-00	TERMOSTATO	THERMOSTAT	TERMOSTATO	THERMOSTAT	x 2
		TEN01177	ANODO	ANODE	ANODO	ANODE	x 8
		RECN26-13440-00	FILTRO DE ACEITE	OIL FILTER	FILTRO OLIO	FILTRE À HUILE	1
		NGKLFR6A-11	BUJÍA	SPARK PLUG	CANDELE	BOUGIE	x 8
		TEN01170	ANODO	ANODE	ANODO	ANODE	x 2
		TEN01173	ANODO	ANODE	ANODO	ANODE	x 10
		TEN01171	ANODO	ANODE	ANODO	ANODE	x 10
		REC63P-13915-00	FILTRO COMBUSTIBLE	FUEL FILTER	FILTRO COMBUSTIBILE	FILTRE ESSENCE	1
		REC6AW-14984-00	TÓRICA VST	O-RING VST	O-RING VST	TORIQUE VST	1
		REC6P3-WS24A-00	FILTRO COMBUSTIBLE	FUEL FILTER	FILTRO COMBUSTIBILE	FILTRE ESSENCE	1
		REC6P3-24564-00	TÓRICA	O-RING	O-RING	TORIQUE	1
		PAF15-04000003	ARANDELA	WHASER	RONDELLA	RONDELLE	1
		CMY300350XPKITA	KIT ÁNODOS	KIT ANODES	KIT ANODI	KIT ANODES	1
		REC90430-08020	JUNTA DESAGÜE	DRAIN GASKET	GUARNIZIONE DRENAGGIO	JOINT DE VIDANGE	x 2
		REC91490-40030	PIN BLOQUEADOR	COTTER PIN	COPPIGLIA	GOUPILLE	1
		REC6AW-W0078-00	KIT BOMBA DE AGUA	WATER PUMP REPAIR KIT	KIT POMPA DELL'ACQUA	KIT POMPE À EAU	1
F350A (2008 +)	RECKITF350A	REC6AW-12411-00	TERMOSTATO	THERMOSTAT	TERMOSTATO	THERMOSTAT	x 2
		CM67F-11325-01A	ANODO	ANODE	ANODO	ANODE	x 10
		CM63P-11325-01A	ANODO	ANODE	ANODO	ANODE	x 3
		NGKLFR6A-11	BUJÍA	SPARK PLUG	CANDELE	BOUGIE	x 8
		RECN26-13440-00	FILTRO DE ACEITE	OIL FILTER	FILTRO OLIO	FILTRE À HUILE	1
		TEN01172	ANODO	ANODE	ANODO	ANODE	x 2
		TEN01177	ANODO	ANODE	ANODO	ANODE	x 8
		REC6CB-24501-01	FILTRO COMBUSTIBLE	FUEL FILTER	FILTRO COMBUSTIBILE	FILTRE ESSENCE	1
		REC6CB-13016-00	TÓRICA VST	O-RING VST	O-RING VST	TORIQUE VST	1
		REC63P-13915-00	FILTRO COMBUSTIBLE	FUEL FILTER	FILTRO COMBUSTIBILE	FILTRE ESSENCE	1
		REC6CB-14984-00	TÓRICA VST	O-RING VST	O-RING VST	TORIQUE VST	1
		REC6P3-24564-00	TÓRICA	O-RING	O-RING	TORIQUE	1
		REC6P3-WS24A-00	FILTRO COMBUSTIBLE	FUEL FILTER	FILTRO COMBUSTIBILE	FILTRE ESSENCE	1
		CM15026A	ANODO	ANODE	ANODO	ANODE	1
		CMY300350KITA	KIT ÁNODOS	KIT ANODES	KIT ANODI	KIT D'ANODES	1
		TEN01170	ANODO	ANODE	ANODO	ANODE	1
		TEN01175	ANODO	ANODE	ANODO	ANODE	1
		TEN01174	ANODO	ANODE	ANODO	ANODE	1
		CM63P-11325-11A	ANODO	ANODE	ANODO	ANODE	1
		PAF15-04000003	ARANDELA	WHASER	RONDELLA	RONDELLE	1
		REC90430-08020	JUNTA DESAGÜE	DRAIN GASKET	GUARNIZIONE DRENAGGIO	JOINT DE VIDANGE	x 2
		REC6AW-W0078-00	KIT BOMBA DE AGUA	WATER PUMP REPAIR KIT	KIT POMPA DELL'ACQUA	KIT POMPE À EAU	1
		REC91490-40030	PIN BLOQUEADOR	COTTER PIN	COPPIGLIA	GOUPILLE	1

SISTEMA DE ALIMENTACIÓN Y FILTRACIÓN
FUEL & FILTRATION SYSTEM
SISTEMA DI ALIMENTAZIONE E FILTRAZIONE
SYSTÈME D'ALIMENTATION ET DE FILTRATION

BOMBA DE COMBUSTIBLE | FUEL PUMP | POMPA BENZINA | POIRE À CARBURANT

BOMBA DE COMBUSTIBLE

Fabricada con elastómeros termoplásticos inyectados, resistentes al alcohol y rayos UV.s

REF		
GS31187	1/4" = 6 mm	1
GS31090	5/16" = 8 mm	1
GS31095	3/8" = 9.5 mm	1

FUEL PUMP

Premium quality bulb resistence to alcohol as well as UV and ozone.

POMPA BENZINA

Fabbricata con elastomero termoplastico, resistente ai solventi e raggi UV.

POIRE À CARBURANT

Fabriqué avec des élastomères thermo-plastiques injectés, résistant à l'alcool et aux rayons UV.

GOLDENSHIP



LÍNEA DE COMBUSTIBLE

Universal. Manguera resistente al alcohol.

REF		
GS31096	5/16" x 2 m	1
GS31097	3/8" x 2 m	1
GS31099	8 mm x 2 m	1
SIE18-8013	5/16" x 2 m	1
SIE18-8015	3/8" x 2 m	1

FUEL LINE ASSEMBLY

Universal. Alcohol resistant hose.



TUBO CARBURANTE

Universale. Tubo resistente ai solventi.



TUYAU CARBURANT

Universelle. Tuyau résistant à l'alcool.



SIE18-8013
SIE18-8015

new

REF	OEM		
GS31183	6Y1-24360-52-00 6Y1-24360-52-01 6Y1-24360-52-02 6Y1-24360-52-51 6Y1-24360-52-52	6 mm x 2 m	1

GOLDENSHIP



new



REF	OEM		
PAF15-09000000	6G1-24306-55 6Y1-24306-55-00	6 mm x 3m	1

MANGUERA DE COMBUSTIBLE | FUEL HOSE | TUBO BENZINA | TUYAU CARBURANT

MANGUERA DE COMBUSTIBLE

Manguera «Trident» para líneas de combustible. Con refuerzo termoplástico que le permite excelente flexibilidad y resistencia a los rayos UV. Color gris. Resistente al alcohol. Especialmente indicado para motores fueraborda.
Garantía: 3 años

FUEL HOSE

Marine fuel hose (distribution and vent) for outboards. Fuel resistant thermo-plastic formulation with 2 spiral reinforcement provides excelent bendability and resistance to UV, aging and permeation by all marine fuels (gasoline/petrol and diesel) including alcohol blends.
Warranty: 3 years

TUBO BENZINA

Tubo «Trident» per línea combustibile. Con rinforzo termoplastico che gli permette un'eccellente flessibilità e resistenza ai raggi UV. Colore grigio. Resistente ai solventi. Indicato per i motori fuoribordo.
Garanzia: 3 anni

TUYAU CARBURANT

Tuyau «Trident» pour carburant. Avec renfort thermoplastique qui permet une excellente flexibilité et résistance aux rayons UV. Gris. Résistant à l'alcool Convient particulièrement aux moteurs hors-bord.
Garantie: 3 ans

REF	Ø			
TRI305-0566	5/16" = 7,92 mm	15 m	1	SAEJ1527 ISO-8469 B1 CE
TRI305-0386	3/8" = 9,53 mm	15 m	1	



TRIDENT

MADE IN THE USA

CE CERTIFIED

YAMAHA

RECAMBIOS MARINOS

De goma para diesel y gasolina sin plomo. Ideal para fueraborda. Refuerzos texiles internos. Muy flexible.
Contenido aromático 50%

Rubber Hose suitable for loading mineral oils, diesel and unloaded fuel

In gomma per diesel e benzina senza piombo. Ideale per motori fuoribordo. Tessuto interno rinforzato. Molto flessibile.

Caoutchouc pour diesel et essence sans plomb. Idéal pour le hors-bord. Renforts textiles internes. Très flexible

CARBUPOMP/10NL

REF	Ø (mm)					
GS35031	6x12	10 bar	50 mm	-25°C ➡ 80° C	50 m	ISO R1307
GS35032	8x15	10 bar	65 mm		50 m	



MUELLE TUBO COMBUSTIBLE / SPRING, FUEL PIPE / MOLLA TUBO COMBUSTIBILE / RESSORT, TUYAU DE CARBURANT

new

REF	OEM
PAF4-04000030	90467-08004
PAF4-05000010	90467-13M13



ADPATADOR LÍNEA DE COMBUSTIBLE / COUPLER / ADATTATORE / RACCORD COUPLEUR

REF	
REC22-8M0001721	Ø 11 mm --> Ø 9 mm



COMPONENTES TANQUE Y CONECTORES / FUEL TANK COMPONENTS & CONNECTORS / COMPONENTI SERBATOIO E CONETTORI / COMPOSANTS ET CONNECTEURS DU RÉSERVOIR

TAPÓN CON RESPIRADERO / PLUG WITH BREATHER / SPINA CON RESPIRO / BOUCHON AVEC EVENT

new

REF	OEM
PAF15-10010000	6YJ-24610-01 6YJ-24610-00



FILTRO / FILTER / FILTRO / FILTRE

new

REF	OEM
PAF15-10000002	6YJ-24167-00



TAPÓN / PLUG / TAPPO / BOUCHON

new

REF	OEM	
PAF4-04120100	67D-24610-00 67D-24610-02 67D-24610-03 67D-24610-04 68D-24610-10	F2.5 F4



RESORTE DE SEGURIDAD PARA TAPÓN / SPRING, PREVENT DESQUAMATING / MOLLA SECURITÀ PER TAPPO / RESSORT, DE SECURITÉ POUR LE BOUCHON

new

REF	OEM
PAF4-04120103	624-24634-00



MEDIDOR DE COMBUSTIBLE / OLEOMETER ASSY / MISURATORE DI CARBURANTE / TUBE D'ASPIRATION POUR RESERVOIR

new

REF	OEM
PAF15-10020000	6YJ-24260-00 6YJ-24260-10
PAF15-10000003	6Y1-24268-00



PAF15-10020000



PAF15-10000003

LLAVE DE CIERRE DE DEPÓSITO / KNOB OIL SWITCH / CHIAVE DE DEPOSITO BLOCCO / COMMUTATEUR D'HUILE AVEC BOUTON

new

REF	OEM	
PAF2.6-00000004	69M-24575-00	F2.5



ABRAZADERA / CLAMP SMALL / FASCETTE / COLLIER

new

REF	OEM	
REC650-24351-51	650-24351-00 650-24351-01 650-24351-50 650-24351-51	6 mm
REC6E5-24351-51	6E5-24351-00 6E5-24351-51	8 mm



CONECTOR DE DEPÓSITO / TANK CONNECTOR / ATTACCO SERBATOIO / RACCORDS DE RESERVOIR

Fabricado en latón. / Made in machined brass. / Fabbricato in ottone. / Fait en laiton.

GOLDENSHIP

REF		
GS31068	1/4" NPT	1



Para conectar dos motores a un sólo depósito, o viceversa. Fabricado en latón. / To connect two motors to a single tank, or vice versa. Made in machined brass / Per collegare due motori a un singolo serbatoio o viceversa. Fabbricato in ottone. / Pour connecter deux moteurs à un même réservoir, ou inversement. Fait en laiton.

GOLDENSHIP MADE IN THE USA

REF		
GS31069	1/4" NPT	1



GOLDENSHIP MADE IN THE USA

REF	OEM		
GS31074	6Y1-24305-05-00 6Y1-24305-06, -00 6YL-24305-01-00	6 mm	1
GS31076	6E5-24305-05-00 6E5-24305-06, -00 6Y2-24305-05-00 6Y2-24305-06-00 6YK-24305-01-00	8 mm	1
GS31075	6G1-24305-00, 01, 02 6G1-24305-02-00 6G1-24305-03, -00 6G1-24305-04, -00 6G1-24305-05, -00 6G1-24305-0500 6Y1-24305-00, -01, -02 6Y1-24305-05-00 6Y1-24305-06-00 6YL-24305-01-00	6 mm	1



REF	OEM	
REC6G1-24304-02	6G1-24304-02	6 mm

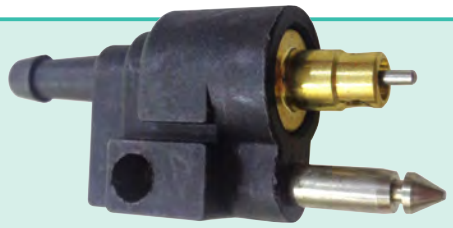

Conector doble

REF		
GS31092	8 mm	1

GOLDENSHIP

Double connector



Connettore doppio

Double connecteur

Toma de tanque de combustible. Fabricado en latón.

REF		
GS31073	1/4" NPT	1
GS31020	1/4" NPT	1

Fuel tank connector
Made in machined brass

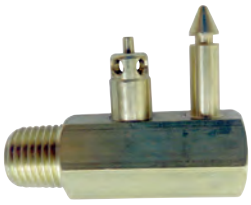

GS31073

Filettatira per serbaotio benzina
Fabbricato in ottone.



GS31020

Prise de réservoir de carburant.
Fait en laiton.

GOLDENSHIP MADE IN THE USA

PASAMAMPAROS

Para atravesar mamparos de hasta 12 mm. Fabricado en latón.

REF		
GS31064	3/8"	1

THRU HULL

For bulkhead up to 12 mm. Made in machined brass.



PASSASCAFO

Per attraversare paratie fino a 12 mm. Fabbricato in ottone.

PASSE-CLOISON

Pour traverser des cloisons jusqu'à 12 mm. Fait en laiton.

GOLDENSHIP MADE IN THE USA

FILTRO DE COMBUSTIBLE Y ELEMENTOS
FUEL FILTERS AND ELEMENTS
FILTRI BENZINA E RACCORDI
FILTRE A ESSENCE ET CARTOUCHE DE RECHANGE

BRACKET

Con 2 tapones de bronce y 2 tubos de extensión. (2 entradas y 2 salidas).

REF		
REC25000	1/4"	AL
REC25010	1/4"	INOX /SS AISI316
REC25020	3/8"	AL
REC25030	3/8"	INOX /SS AISI316
RECOBBRACKET	1/4"	Plástico | Plastic Plastica | Plastique

BRACKET

With 2 brass plugs and 2 extension tubes. (2 inputs & 2 outputs).



SUPPORTO

Con 2 tappi di bronzo e 2 tubi di estensione. (2 ingressi entrata carburante e 2 uscite carburante).



REC25000 - REC25020



REC25010 - REC25030

TÊTE DE FILTRE À ESSENCE

Avec 2 bouchons en bronze et 2 tubes d'extension. (2 entrées et 2 sorties).



RECOBBRACKET

FILTRO COMBUSTIBLE SEPARADOR DE AGUA

REF	MICRON	
REC24942	10	4 7/16" = 11 cm
REC35-802893Q01	10	3 3/4"
REC855686	28	4 7/16"
REC35-802893Q	25	3 3/4"
RACPFF5510	10	4 7/16"

WATER SEPARATING FUEL FILTER

RACOR



RACPFF5510

FILTRO SEPARATORE ACQUA-BENZINA

RECmar®



REC24942



REC35-802893Q01

FILTRE À ESSENCE



REC855686



REC35-802893Q

Filtro original. | OEM filter. | Filtro benzina originale. | Filtre à essence original

REF	MICRON	
RM35-802893Q	10	3 3/4"



FILTRO CON BRACKET
Con 2 tapones de bronce y 1 tubo de extensión.

OEM FILTER WITH BRACKET
With 2 brass plugs & 1 extension tube.

FILTRO BENZINA CON SUPPORTO
Con 2 tappi di bronzo e 1 tubo di estensione.

FILTRE A ESSENCE AVEC SUPPORT
avec 2 bouchons en bronze et 1 tube d'extension

REF	MICRON			BRACKET
REC24950	25	1/4"	50 GPH	AL
REC24952	10	1/4"	50 GPH	AL



RECMAR

FILTRO DECANTADOR DE COMBUSTIBLE COMPLETO CON VASO TRASPARENTE

COMPLET FUEL FILTER WITH TRANSPARENT BOWL

FILTRO DI DECANTAZIONE BENZINA COMPLETO CON VASCHETTA TRASPARENTE

FILTRE SÉPARATEUR D'ESSENCE

RACOR

REF		BRACKET
RAC320R-RAC-01	RACS3213	AL
RAC320R-RAC-03		Plástico / Plastic / Plastica / Plastique



REF			BRACKET
RECOBFILALU	RECOBELEMENT	150 l/h	AL
RECOBFILTER			Plástico / Plastic / Plastica / Plastique



RECMAR

REF	OEM		R.O. / OEM	MICRON		
REC90794-46866	907-94469-05	REC90794-46868	907-94469-13	10	117 l/h	175 hp





LLAVE PARA FILTRO
FILTER KEY
CHIAVE DA FILTRO
CLÉ À FILTRE

REF
RECYS-225-15



new

REF	R.O./OEM	MICRON	
PAF40-0701000EI	907-94469-05	10	70 hp



new



REF	OEM		OEM	MICRON		
RAC120R-RAC-01	YMM-2W114-00	RACS3240	YMM-2E114-00	10	114 l/h	50 - 115 hp

RACOR



FILTRO CON BOMBA CEBADORA — FILTER WITH PRIMMING PUMP — FILTRO CON POMPETA PER RIEMPIRE — FILTRE ESSENCE AVEC POMPE D'AMORCAGE

RACOR

REF	OEM		OEM	MICRON			
RAC490R-RAC-01	YMM-2W227-01	RACS3227	YMM-2E227-00, 01	10	340 l/h	3/8" NPTF	150 hp





LLAVES PARA FILTRO — FILTER KEY — CHIAVE DA FILTRO — CLÉ À FILTRE

REF
RACRK22628

RACOR



REF	
REC70720	65 - 110 mm

RECmar

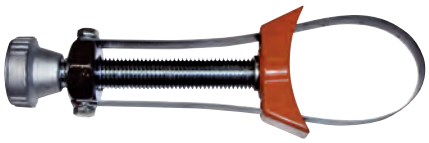

RACOR DE LATÓN — RACOR MADE IN BRASS — RACCORDO IN OTTONE — RACCORD EN LAITON

REF			
GS31065	1/4" NPT	3/8" = 9.5 mm	1
GS31166	1/4" NPT	5/16" = 7.9 mm	2
GS31155	3/8" NPT	3/8" = 9.5 mm	2
GS31156	3/8" NPT	5/16" = 7.9 mm	2
GS31157	3/8" NPT	1/4" = 6.4 mm	2



REF			
GS31066	1/4" NPT	5/16" = 7.9 mm	2
GS31067	1/4" NPT	3/8" = 9.5 mm	2

GOLDENSHIP



FILTRO COMBUSTIBLE PARA MONTAJE EN LINEA — IN-LINE FUEL FILTER

REF				
GS31001	50 l/h	6-8 mm	plástico plastic plastica plastique	1
GS31002	150 l/h	8-10 mm		1

GOLDENSHIP



GS31001

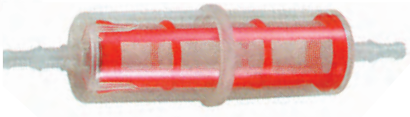

GS31002

REF			
GS30435	6, 8, 10 mm	metal + cristal metal + crystal metallo + cristallo métal + cristal	1

GOLDENSHIP



REF	OEM			
REC40145	65W-24251-10	1/4"	1/4"	plástico plastic plastica plastique
REC40155		5/16"	5/16"	
REC40165	67F-24251-02	3/8"	3/8"	
REC40135		5/16"	3/8"	



REF	OEM
PAF4-04120005	6L5-24251-00



REF	OEM	
REC35-80365M	646-24251-02	6 mm
PAF4-05000300	646-24251-01	



REF	OEM	
REC68T-24251-00	68T-24251-00 68T-24251-01 6EE-F4251-00	F6, F8 (2001+)



REF	OEM	
REC6F5-24563-00	6F5-24563-00	
REC61N-24563-10	61N-24563-10 61n-24563-00	9.9 hp



REC6F5-24563-00



REC61N-24563-10

FILTRO BENZINA PER MONTARE IN LINEA — FILTRE A ESSENCE EN LIGNE

REF	OEM	
PAF15-07080000	61N-24560-00	15 - 60 hp



REF	OEM	
PAF15-07080002	61N-24521-00	plástico plastic plastica plastique



REF	OEM
REC64J-24560-10	64J-24560-00 64J-24560-10

E75, 75AE, AET (2003-15)
85 AED, AET (2003-15)
F40 (2002-07)
T50, FT50, F50 (2001-16)
T60, FT60, F60 (2002-07)



REF	OEM
REC6BG-13915-00	6BG-13915-00

F30 (2013)
F40 (2008-13)
F50 (2005-13)
F60 (2005-13)
F70 (2010-13)
F75 (2005-13)
F90 (2005-13)
T50 (2005-13)
T60 (2005-13)



REF	OEM
REC6C5-24251-00	6C5-24251-00

F30 (2009+)
F40 (2006+)
F50 (2005+)
F60 (2005+)
F70 (2011+)
F75 (2005)
F80 (2008+)
F100 (2005+)
F115 (2014+)
F130 (2015+)



REF	OEM
REC68V-24563-00	68V-24563-00

EUROPE
F40
F50
F50
F80
F100
F115



REF	OEM
REC6D8-WS24A-00	6D8-WS24A-00 6D8-24563-00

F50 - F115



REF	OEM
REC68F-24563-10	68F-24563-10

150-300HP (2004-06)
Z, VZ, LZ



REF	OEM
REC6C5-13915-00	6C5-13915-00

F50 (2005-13)
F60 (2005-13)
F70 (2010-13)
F75 (2005-13)
F90 (2005-13)
T50 (2005-13)
T60 (2005-13)



REF	OEM
REC69J-24501-10	69J-24501-10

F150-F225 (2006-14)
F250 (2005-14)



REF	OEM
REC6P3-WS24A-00	6P3-WS24A-00 6P3-WS24A-01 6P3-24563-00

F150 (2007-11)
Z200 (2007)
Z150/175 (2007)
F225 (2007-11)
F200 (2007-11)
F350 (2008-11)
F250 (2009-11)
Z300 (2007)
F300 (2011)



REF	OEM
REC6P3-24564-00	6P3-24564-00



REF	OEM
REC65L-24563-00	65L-24563-00

F200 (2002-06)
F150 (2004-06)
225FETO (2003)
L/250B (1997-2003)



new

REF	OEM
REC6P2-WS245-00	6P2-WS245-00 6P2-24563-00

F (L) 200C
F (L) 250A



new

REF	OEM
REC68F-24563-00	68F-24563-00

(L) Z 150P, Q
(L) Z 175 G
(L) Z 200N/P
(L) Z 250 D/F



new

REF	OEM
REC69J-24502-00	69J-24502-00

LF/FL/F150A,T,D,B (2005+)
LF/FL/F200A,T,B (2004-11)
LF/FL/F225T,A (2004-11)
F75T, B (2005)
F80B,A (2005+)
F90,T,B,A (2013+)
F100D (2005+)



REF	OEM
REC61A-24563-00	61A-24563-00

V6, 3'1L, D-T



GUÍA FILTROS DE COMBUSTIBLE — FUEL FILTER GUIDE — GUIDA FILTRO BENZINA — GUIDE FILTRE À ESSENCE

	REF
3A / F2,5A / F4A	PAF4-04120005
4A / 5C / 6C / 8C	PAF4-05000300
F4B / F5A / F6A / F6C / F8C / FT8D / F9,9J / FT9,9L	REC68T-24251-00
F9,9C / FT9,9D / F15A / F25A / FT25B (--'04)	REC40145
F9,9C (1001584 --) / FT9,9D (1001139 --) /F15A (1009198 --) / F25A & FT25B (1013331--) ('04 --)	REC61N-24563-10
F25G	REC6D8-WS24A-00
F30A / F40B	REC40145
FT50B (--'00)	REC61N-24563-10
FT50B ('01--)	REC68V-24563-00
F60A / FT60B (--'03)	REC68V-24563-00
F60A / FT60B ('04--)	REC61N-24563-10
F50F / FT50G / F60C / FT60D (--'06)	REC68V-24563-00
F50F / FT50G / F60C / FT60D ('07--)	REC6D8-WS24A-00
F30B / F40F / F50H / F60F / FT50J / FT60G/ F70A	REC6D8-WS24A-00
F80A / F100A (--'01)	REC40165
F80A / F100A ('02--)	REC61N-24563-10
F80B / F100D / F(L)115A (--'06)	REC68V-24563-00
F80B / F100D / F(L)115A ('07--) / F(L)115B	REC6D8-WS24A-00
F100F	REC6D8-WS24A-00

	REF
F(L)150A / F(L)200A / F200B / F(L)225A(--'06)	REC65L-24563-00
F(L)150A / F(L)200A / F200B / F(L)225A('07--)	REC6P3-WS24A-00
F(L)200C / F(L)250A (--'06)	REC6P2-WS245-00
F(L)200C / F(L)250A ('07--)	REC6P3-WS24A-00
F(L)225B / F225C / F(L)225F (V6 4,2L) /F(L)250D (V6 4,2L) / F(L)300A / F(L)300B(V6 4,2L) / F(L)350A / F(L)200F / F(L)200G /F175A	REC6P3-WS24A-00
9,9F / 15F / F15C / F20B / 25N / F25D /FT25F / 30D / 40V / 50G / F50A / 60F / 75C/ 90A / 100A / F100B / 115C / (L)130B /(L)150F / 175D / (L)200F / 200G / 225D	REC61N-24563-10
115B	REC6F5-24563-00
(L)250A	REC61A-24563-00
225G / 250B	REC65L-24563-00
(L)Z150P / (L)Z150Q / Z175G / (L)Z200N /Z200P (--'04)	REC68F-24563-00
(L)Z150P / (L)Z150Q / Z175G / (L)Z200N /Z200P ('05/'06)	REC68F-24563-10
(L)Z150P / (L)Z150Q / Z175G / (L)Z200N /Z200P ('07--)	REC6P3-WS24A-00
(L)Z250D / Z250F (--'03)	REC68F-24563-00
(L)Z250D / Z250F ('04/'06)	REC68F-24563-10
(L)Z250D / Z250F ('07--)	REC6P3-WS24A-00
(L)Z300A (--'06)	REC68F-24563-10
(L)Z300A ('07--)	REC6P3-WS24A-00

FILTRO VST — VST FILTER — FILTRO VST — FILTRE VST

REF	OEM
REC68V-13915-00	68V-13915-00

F115	(2000-09)
F200 TXR	(2002-09)
LF200 TXR	(2002-09)
F225 TXR	(2002-09)
F225 TUR	(2002-09)



REF	OEM
REC68F-13915-00	68F-13915-00

HPDI 150	(2000-05)
V-Max HPDI 150	(2000-09)
HPDI 225	(2003-09)
HPDI 250	(2003-09)
HPDI 300	(2004-09



REF	OEM
REC66K-13915-00	66K-13915-00

HDX150	(1999-05)	LX225	(2000-03)
LX150	(1999-01)	S225	(1999)
PX150	(1999)	SX225	(2000-03)
SX150	(1999-04)	V225	(1999)
VX150	(2000-04)	VX225	(2000-04)
LX200	(1999-01)	L250	(1999)
SX200	(1999-05)	LX250	(2000-03)
V200	(1999)	SX250	(2000-03)
VX200	(2000-05)	VX250	(2002-04)
L225	(1999)		



REF	OEM
REC65L-13915-00	665L-13915-00

L225	(1997-98)
S225	(1997-98)
L250	(1997-98)
V200	(1998)
V225	(1998)



REF	OEM
REC63P-13915-00	63P-13915-00

F150 TXR	(2004-09)	F300 TXR	(2007-09)
F150 TLR	(2004-09)	F300 TUR	(2007-09)
F150 TJR	(2009)	F350 TXR	(2007-09)
LF150 TXR	(2004-09)	F350 TUR	(2007-09)
F250 TXR	(2005-09)	F225 TLR	(2007-09)
F250 TUR	(2005-09)		



REF	OEM
REC60V-24251-01	60V-24251-01

LZ150	(2005)	VZ225	(2005-09)
VZ150	(2005-10)	LZ250	(2005)
Z150	(2005)	VZ250	(2005-09)
VZ175	(2005-10)	Z250	(2005)
Z175	(2005)	LZ300	(2005-06)
LZ200	(2005-10)	VZ300	(2005-09)
VZ200	(2005-09)	Z300	(2005-06)
Z200	(2005-10)		



GUÍA FILTROS VST — FUEL FILTER GUIDE — GUIDA FILTRO BENZINA — GUIDE FILTRES VST

	REF	OEM
3A, F4A	PAF4-04120005	6L5-24251-00
4A, F4A 5C 6C/D 8C, F8B F9.9A/B, FT9.9A HPDI	REC35-80365M	646-24251-02
FT8D	REC68T-24251-00	68T-24251-00
9.9D 15D 20C/D 25D/J/N/Q 30A/D/G 40H/Q 50D/G 55B 60F 70B 75A 80A 85A 90A 100A 115B/C/(L) 130B/(L) 150C/(L) 175B 200B/PRO 200V 225B, (-1993)	REC6F5-24563-00	6F5-24563-00

	REF	OEM
9.9C/D/F 15C/D/F 20/D/F 25B/D/J/N/Q/V 30D/GH 40H/Q/V/X/Y/F, 40A/B/F 45A/F, 50A/B/FT, 50A, 50D/G/H/PRO, 50 55B 60F 70B 75A/C/PRO 80A 85A 90A 100A/PROV, 100/115B/C/(L) 130B/D 150H/ (L), 150C/ (L), 150F 175B/D/(L) 200B/(L), 200F/G/PROV, 200/225B/D (1994)	REC61N-24563-10	61N-24563-10
FT 9.9D, F9.9C/F 15A/F 20A/F 25A/FT, 25B/F 30A/F 40B	REC40145	65W-24251-00

	REF	OEM
F80A F100A	REC40165	67F-24251-02
F40C F50F, FT50C/G/F 60A/C/FT, 60B/D/F 80B/F 100D/F(L) 115A	REC68V-24563-00	68V-24563-00
150A/(L) 225C/(L) 250A	REC61A-24563-00	61A-24563-00
225G/(L) 250B/F(L) 150A/F(L) 200A/F(L) 225A/F(L) 250A	REC65L-24563-00	65L-24563-00
HPDI (Fuel Strainer)	REC60V-24251-01	60V-24251-01

FILTRO DE ACEITE OIL FILTER FILTRO OLIO FILTRE A HUILE

REF	OEM
REC61A-13411-00	61A-13411-00

Z250TR
DETO
FETO (2003-07)
250B
AETO (1993-06)
L250B
TXR (2000-03)
225G-GETOL (1999-03)

Z300 AETO
TXR (2004-07)
L250G-GETOX (2006-10)

REF	OEM
REC6E5-13411-00	6E5-13411-00

V-Z 200T
PETO
TLR (2001-07)
Z150 F
TXRA
PETOLX (1996-07)
175D
DETO (1996-03)

Z1200F-FETO (1996-10)
225D-DETOX (2000-03)
115 B
BET (1988-02)
130BETO (1991-01)
115CETO
TLR
TXR (1991-13)



REF	OEM
REC6J8-13411-00	6J8-13411-00

25Q-QEO (1990-94)
50
G-GEO-GETOL (1993-07)
50H-HR-MDO (1996-02)
40V-MH-MD
VETO
VE-O (1995-13)
40YETO-YETOL (2005-07)
30DETOL
DEOS
MH (2011-13)
GOLTRA
F

FETO
L (1989-13)
70BETO
B
BEMO (1989-13)
25J
JEQ
JETO
NEM
W (1988-13)
20D
EM-ML

REF	OEM
REC68F-13440-00	68F-13440-00

LZ
LZ300
TR
AETO-X-V (2004-07)
Z175TR
GETO-X (2002-07)
V
Z200T
PETO

TLR (2001-07)
Z250
TXR
DETO
X (2003-07)
Z150P
TXR
PETO (2000-07)



REF	OEM
REC35-80365M	646-24251-02

L150 175 130
L200 250
225 115



REF	OEM
REC6G8-13440-00	6G8-13440-00



new

REF	OEM
REC5GH-13440-60	5GH-13440-60 5GH-13440-50



REF	OEM	
REC35-822626Q15	69J-13440-00, 01, 03	3/4" x 16NPT
REC5GH-13440-00	5GH-13440-00, 30, 70	20 x 1.5
RECN26-13440-00	N26-13440-00, 02	3/4" x 16 NPT
REC3FV-13440-00	3FV-13440-00, 10, 20, 30	20 x 1.5



GUÍA FILTROS DE ACEITE OIL FILTER GUIDE GUIDA FILTRO OLIO GUIDE FILTRE A HUILE

	REF
F8A F9,9A/B FT9,9A (1990+)	REC6G8-13440-00
F9,9C (2000+) FT9,9D (2000+) F15A (2000+) F20A(2000+) F25A (2000+)/FT25B F30A F40A (2000+)/F40B (2001+) F50A(1999-05)/F50F(-2005)/FT50B (2000+)/FT50C (-2005)/ FT50G (-2005) F60A (-2005)/F60C(-2005)/FT60B (-2005)/FT60D (-2005) F80A (2000+)/F80B F100A (2000+)/F100B/F100D F(L)115A/F115B/F100F	REC5GH-13440-00
F15C (2007+) F20B (07+) F25D/G FT25F F30B F40F F50A (06+)/FT50C (06+)/F50F (06+)/FT50G (06+) FT60B (06+)/F60A (06+)/F60C (06+)/FT60D (06+) F50H/F60F/FT50J/FT60G F70A/VX CRUISER/DELUXE (08-11) VX SPORT 08/FX/FX HO/FX HO CRUISER 08	REC5GH-13440-60
F9,9C ' 98/FT9,9D '99/F15A '98/F20A '98/F25A '98/'99/F40A '99/F40B 2000/F50A '95--'98/FT50B '96--'99/F80A/F100A '99	REC3FV-13440-00
F(L)150A/F175A/F(L)200A/F(L)200C/F(L)200F/F(L)200G/ F(L)225A/F(L)225B/F225C/F(L)250A/F(L)250B/FX SHO/FX SHO CRUISER/FX HO CRUISER/FZR/FZS	REC35-822626Q15
F(L)300A/F(L)350A/F(L)225F/F(L)250D/F(L)300B	RECN26-13440-00
WaveRunner Model Part Number Price	
FX140/FX140 CRUISER/FX160/FX160 CRUISER/FX-H.O CRUISER/FX-HIGH OUTPUT/VX 1100SPORT & DELUXE	REC5GH-13440-00

BOMBA DE INYECCIÓN DE ACEITE | OIL INJECTION PUMP | POMPA INIEZIONE BENZINA | POMPE D'INJECTION D'HUILE

new

REF	OEM
REC6R4-13200-02	6R4-13200-00 6R4-13200-01 6R4-13200-02

150 - 200 HP
V6
2T/Strokes

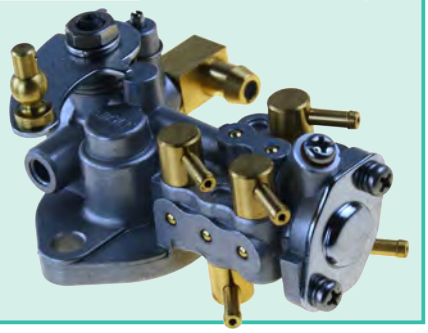

new

REF	OEM
REC6E5-81900-01	6E5-81900-01

2T/Strokes

Instalada en el depósito
Installed in the tank
Installato nel serbatoio
Installé dans le réservoir



ACEITE | OIL | OLIO | HUILES

new

REF	OEM			
REC2TU6	YMD-63021-01	1 L	6	2 STROKES
REC2TU3	YMD-63021-04	5 L	3	TC-W3
REC5W40U6		1 L	6	SAE 5W40
REC5W40U3		5 L	3	
REC10W30U6	YMD-63050-01	1 L	6	SAE 10W30
REC10W30U3	YMD-63050-04	5 L	3	
REC10W40U6	YMD-63060-01	1 L	6	SAE 10W40
REC10W40U3	YMD-63060-04	5 L	3	
REC25W40U3		5 L	3	SAE 25W40



RECLUBE

REF	OEM			
RM92-858026QB1U6	92-858026QB1	1 L	6	2 STROKES
RM92-858027QB1U3	92-858027QB1	3,8 L	3	
RM92-8M0086220U6	92-8M0086220	1 L	6	SAE 10W30
RM92-8M0086221U3	92-8M0086221	4 L	3	


RM92-858026QB1U6



RM92-858027QB1U3



RM92-8M0086220U6



RM92-8M0086221U3

BOMBA DE COMBUSTIBLE — FUEL PUMP — POMPA BENZINA — POMPE À ESSENCE

BOMBA DE COMBUSTIBLE MECÁNICA — FUEL PUMP MECHANICAL — POMPA BENZINA MECCANICA — POMPE À ESSENCE MECANIQUE

new

REF	OEM	2T STROKES	4T STROKES
PAF20-05050000	6AH-24410-00		✔

F9.9H (2009+)
F13.5B (2007-09)
F15C,E,M (2007+)
F20B,E,M (2007+)

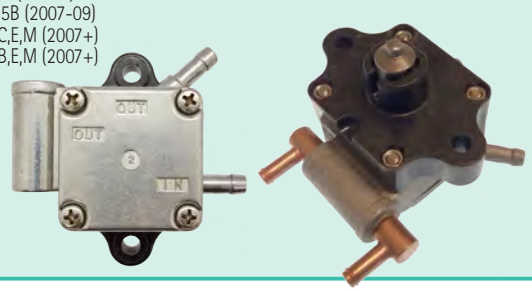

new

REF	OEM	2T STROKES	4T STROKES
REC68V-24410-00	68V-24410-00		✔

F100B (2003-10)
F100C (2001-07)
F90 (2003-04)
F75A, T (2003-04)
F100A (2003-06)
F80A (2002-07)
F115A, TR, J (2000-10)



REF	OEM	2T STROKES	4T STROKES
REC6E5-24410-03	6E5-24410-01-00	✔	

V4
V6 (1989-03)



REF	OEM	2T STROKES	4T STROKES
PAF15-07140000	66M-24410-11		✔

F9.9/13.5/15



REF	OEM	2T STROKES	4T STROKES
REC68T-24410-00-00	68T-24410-00 68T-24410-01		✔

F6A/B/M (2000-09)
F8C/M/E/D/PF/G (2000+)
F9.9F/M/E/G/J/L (2008+)



REF	OEM	2T STROKES	4T STROKES
PAF25-05130000	62Y-24410-04		✔

F20/25//30/40/45/50/60



REF	OEM	2T STROKES	4T STROKES
PAF4-04090000	67D-24410-03		✔

F4



REF	OEM	2T STROKES	4T STROKES
REC692-24410-00	692-24410-00 6A0-24410-00 6A0-24410-05 6A0-24410-03 6A0-24410-04		✔

25-85HP



REF	OEM	2T STROKES	4T STROKES
REC6A0-24410-04	6A0-24410-00 6A0-24410-01 6A0-24410-02 6A0-24410-03 6A0-24410-04		✔

20 - 90 HP (1985-92)



REF	OEM	2T STROKES	4T STROKES
REC6C5-24410-00	6C5-24410-00		✔

F30B (2009+)
F40A/D/H/F (2006+)
F50F/T/H/J/G (2005+)
F60A/B/C/D/F/G/T (2005+)



BOMBA DE COMBUSTIBLE ELECTRICA / FUEL PUMP ELECTRIC

REF	OEM		2T STROKES	4T STROKES
REC68F-13907-01	68F-13907-01	REC66K-14984-00	✔	

VZ, Z150 (2000-07)
VZ, Z175 (2001-07)
V, L, Z200 (2000-07)



REF	OEM		2T STROKES	4T STROKES
REC63P-13907-03	63P-13907-03 63P-13907-02 63P-13907-01 63P-13907-00	REC63P-14984-00		✔

F150 A/AET/AETL/AETX/AET1/AET2/BET/BETX/DET/DET/DETX
F150 TRC/TXRC/TLRC/TR/TLRD/TLR/TLRF/TRG/TXR/TRF
(2004+)



REF	OEM		2T STROKES	4T STROKES
REC69J-13907-03	69J-13907-03 69J-13907-02 69J-13907-01 69J-13907-00 69J-13907-04	REC68V-14984-00		✔

F200 A/AETX/AET/AETU
F200 TXRA/TXRB/TXRC/TXRD/TR/TXR/TXRF
F225 A/AETU/AETX/AET/TXRA/TXRB/TXRC/TXRD/TXRF
F225 TXR/TR/TURD/TURC
(2002-10)



REF	OEM		2T STROKES	4T STROKES
	69J-24410-02 69J-24410-01 69J-24410-00	REC6P2-14984-00		✔

F200 A/AETX/AET/CETX
F200 TXRA/TXRB/TXRC/TXRD/TR/TXR/TXRF
F225 A/AETU/AETX/AET/B/BETU/BETX/CET/CETL
F225 TXRA/TXXB/TXRC/TXRD/TXR/TXRF/TR/TURD/TURC
F250 AET/AETX/AETU/A/BET/
BETX/BETU
F250 TXR/TURF/TXRF
(2002-11)



REF	OEM		2T STROKES	4T STROKES
REC6AW-13907-00	6AW-13907-00 6P2-13907-00	REC6AW-14984-00		✔

F200 C/ CETX (2006-11)
F225 B /BETX/CET/CETL (2006-11)
F225 BETU/BETX/A/AETU/AETX/TURF/TRG/TXRF (2006-11)
F350 AET/AETU/AETX/TRG/TURG (2008-11)



POMPA BENZINA ELETTRICA / POMPE À ESSENCE ELECTTRIQUE

REF	OEM		2T STROKES	4T STROKES
REC66K-13907-00	66K-13907-00 65L-13907-00	REC66K-14984-00	✔	

225G (1999-02)
250BETO (1997-02)
L/SX250 TXR (2000-02)
225FETO/FETOX (2003)



REF	OEM		2T STROKES	4T STROKES
REC67H-13907-00	67H-13907-00	REC66K-14984-00	✔	

225G/GETOL/FETO (2002-04)
250B/BETO/TXRA (2002-04)



REF	OEM		2T STROKES	4T STROKES
REC60V-13907-00	60V-13907-00	REC66K-14984-00	✔	

Z, LZ 250 (2003-07)
Z, LZ 300 (2003-07)



REF	OEM		2T STROKES	4T STROKES
REC68V-13907-00	68V-13907-00 68V-13907-01 68V-13907-02 68V-13907-03 68V-13907-04	REC68V-14984-00	✔	✔

Z, LZ 250DET/TR/FET (2003-07)
Z, LZ 300AET/TR/TX (2004-07)
LF/FL/F115A,T (2000-06)



new

REF	OEM		2T STROKES	4T STROKES
REC866169T01	6C5-13907-00	REC6C5-14984-00		✔

F40D/G/H (2006+)
T/FT/F50F/H/T (2005+)
T/FT/F60A/B/C/F/T (2005+)
F70A (2011+)
F75C/T (2005-09)
F80A/B/C (2005+)
F90A/B/T (2005+)
F100D (2005+)



REF	OEM
REC6G1-24411-00	6G1-24411-00

3-15HP



REF	OEM
REC6E0-24411-00	6E0-24411-00

4C/5C/AC



REF	OEM
REC6E0-24471-00	6E0-24471-00

4HP



REF	OEM
REC6G1-24471-00	6G1-24471-00

6-8HP



REF	OEM
REC677-24471-01	677-24471-01

E8D/9.9D/15D



REF	OEM
REC63V-24411-00	63V-24411-00

9.9
13.5
15HP



REF	OEM
REC677-24411-02	677-24411-02

9.9>15HP



REF	OEM
REC648-24411-00	648-24411-00

20>70HP



REF	OEM
REC692-24411-00	692-24411-00

20>90HP



REF	OEM
PAF25-05130005	62Y-24471-00

F25>F80HP



REF	OEM
REC663-24411-00	663-24411-00

25>90HP



REF	OEM
REC6J8-24471-00	6J8-24471-00

30HP



REF	OEM
REC6E5-24411-00	6E5-24411-00-00

115/150/175/200HP



REF	OEM
REC6E5-24471-00	6E5-24471-00

115>250HP



REF	OEM
REC6G1-24431-01	6G1-24431-01

3A/MSH
6C/CEM/D/DEM/TRV/MSH/CMH
8C/CEM/TRV/MSH/CMH/MH
9.9F
13.5AWH
15F



REF	OEM
REC6E0-24434-00	6G1-24431-01

4AC/MSH/AS/A
5C/CS/CMH



REF	OEM
REC6E0-24435-00	6E0-24435-00

4AC/MSH/AS/A
5C/CS/CMH



REF	OEM
REC677-24435-01	677-24435-01

9.9D
15D

20DM/DEO
25NE/NEMO



REF	OEM
REC648-24434-01	648-24434-01

20C/CM
25Q/D/B/BMH
25V/VE
E30HMH
30G/H
40V/VM/VE/YE
C40
E40
E40X
40X
50G/GEO/GETO/H/D
55B/BE
60FEO/FETO/TLR
E60H
70B/BETO
75CETO/AE
E75B
80A/AE
85A/AE
90A/AEO/AET



REF	OEM
REC648-24435-02	648-24435-02

20C/CM
25Q/D/B/BMH
25V/VE
E30HMH
30G/H
40V/VM/VE/YE
C40
E40
E40X
40X
50G/GEO/GETO/H/D
55B/BE
60FEO/FETO/TLR
E60H
70B/BETO
75CETO/AE
E75B
80A/AE
85A/AE
90A/AEO/AET



REF	OEM
REC650-24431-A0	650-24431-A0

25-300HP



REF	OEM
REC6E5-24435-00	6E5-24435-00

100A/TLR
115A/ETN/BET/B/BICET/TLR
130BETO
140AETO
150AETO/ETN/FETO
175AETO/DETO/BETO
200AETO/ETN
V200/G/BETO
220AET
225DET/BETO
250AET
Z300



REF	OEM
REC6E5-24434-02	6E5-24434-02

100A/TLR
115A/ETN/BET/B/BICET/TLR
130BETO
140AETO
150AETO/ETN/FETO
175AETO/DETO/BETO
200AETO/ETN
V200/G/BETO
220AET
225DET/BETO
250AET
Z300



JUNTAS VST — VST GASKETS — GUARNIZIONE VST — JOINTS VST

new

REF	OEM
REC68V-14984-00	68V-14984-00

Z, LZ 250DET/TR/FET (2003-07)
Z, LZ 300AET/TR/TX (2004-07)
LF/FL/F115A,T (2000-06)



new

REF	OEM
REC6CB-14984-00	6CB-14984-00

F115 + (2012+) NEW MODEL



new

REF	OEM
REC63P-14984-00	63P-14984-00

F150 A/AET/AETL/AETX/AET1/AET2/BET/BETX/DET/DET/DETX
F150 TRC/TXRC/TLRC/TR/TLRD/TLR/TLRF/TRG/TXR/TRF
(2004+)



new

REF	OEM
REC6C5-14984-00	6C5-14984-00

F40D/G/H (2006+)
T/FT/F50F/H/T (2005+)
T/FT/F60A/B/C/F/T (2005+)
F70A (2011+)
F75C/T (2005-09)
F80A/B/C (2005+)
F90A/B/T (2005+)
F100D (2005+)



new

REF	OEM
REC66K-14984-00	66K-14984-00

Z, LZ 250 (2003-07)
Z, LZ 300 (2003-07)



new

REF	OEM
REC6AW-14984-00	6AW-14984-00

F200 C/ CETX (2006-11)
F225 B /BETX/CET/CETL (2006-11)
F225 BETU/BETX/A/AETU/AETX/TURF/TRG/TXRF (2006-11)
F350 AET/AETU/AETX/TRG/TURG (2008-11)



new

REF	OEM
REC6P2-14984-00	62P-14984-00

F200 A/AETX/AET/CETX
F200 TXRA/TXRB/TXRC/TXRD/TR/TXR/TXRF
F225 A/AETU/AETX/AET/B/BETU/BETX/CET/CETL
F225 TXRA/TXXB/TXRC/TXRD/TXR/TXRF/TR/TURD/TURC
F250 AET/AETX/AETU/A/BET/BETX/BETU
F250 TXR/TURF/TXRF
(2002-11)



new

REF	OEM
REC6CB-13016-00	6CB-13016-00

F115 +



REGULADORES DE PRESIÓN COMBUSTIBLE | FUEL REGULATOR | REGOLATORE BENZINA | REGULATEUR DE PRESSION D'ESSENCE

REF	OEM
REC63P-13906-00	63P-13906-00

F150 (2004+)
63P/64P/6BM/6BN

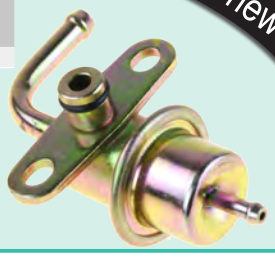

REF	OEM
REC6P2-13906-00	6P2-13906-00

F200 (2006-11)
6AL / 6AM
F225 (2007-11)
6AS/6AT/6BB
F250 (2006-11)
6BR/ 6BS/6P



REF	OEM
REC69J-13906-00	69J-13906-00

F200 (2002-07)
60L / 60M
F225 (2005-07)
69J / 69K



INYECTORES | INJEKTOR | INIETTORE | INJECTEURS

INYECTOR | INJEKTOR | INIETTORE | INJECTEUR

REF	OEM
REC6L5-13761-00	65L-13761-00



REF	OEM
REC6D8-13761-00	6D8-13761-00



REF	OEM
REC6BG-13761-00	6BG-13761-00



REF	OEM
REC68V-8A360-00	68V-8A360-00 68V-13761-00



REF	OEM
REC6C5-13761-00	6C5-13761-00



REF	OEM
REC6P2-13761-00	6P2-13761-00



new

REF	OEM
REC63P-13761-01	63P-13761-00/01



new

REF	OEM
REC69J-13761-00	69J-13761-00



P. 37

REF
STA93008
STA93016



P. 38

REF
GE22207



GUÍA INYECTORES Y SENSORES · GUIDE INJECTORS & SENDERS · GUIDA INIETTORI E SENSORI · GUIDE INJECTEURS ET SONDES

					TPS	MAP
F20 F/G	6GX & 6HY	2017+	REC6FM-13761-00			
F25 G/M	6FM	2017+	REC6FM-13761-00			
F30B	6BT	2009+	REC6BG-13761-00			
F40 A/F	6BG	2009	REC6BG-13761-00			
F40 D/H/G	6AK & 6CY	2006+	REC6C5-13761-00		REC6C5-85885-00	REC68F-83688-00
F50 F/T/H/G/J	6C1 & 6C2	2005+	REC6C5-13761-00		REC6C5-85885-00	REC68F-83688-00
T50 A/B/T	6C2	2005+	REC6C5-13761-00		REC6C5-85885-00	REC68F-83688-00
F60 A/B/C/D/E/F/G/T	6C5 & 6C6	2005+	REC6C5-13761-00		REC6C5-85885-00	REC68F-83688-00
T60 A/B/T	6C6	2005+	REC6C5-13761-00		REC6C5-85885-00	REC68F-83688-00
F70 A	6CJ	2011+	REC6C5-13761-00		REC6C5-85885-00	REC68F-83688-00
F75 T/ B	6D61	2005	REC6D8-13761-00		REC6C5-85885-00	REC68F-83688-00
F80 C	6CK	2009-12	REC6D8-13761-00		REC6C5-85885-00	REC68F-83688-00
F80 B	6D7	2005+	REC6D8-13761-00		REC6C5-85885-00	REC68F-83688-00
F100 D	6D9	2005+	REC6D8-13761-00		REC6C5-85885-00	REC68F-83688-00
F115 A/ T	68V & 68W	2000-11	REC68V-8A360-00		REC68V-85885-00	REC68V-82380-00
F115A	68V & 68W	2012-15	REC68V-13761-10		REC68V-85885-00	REC68F-83688-10
F115 B	6EK & 6EL	2014+	REC6EK-13761-00		REC6C5-85885-00	REC68F-83688-10
F130 A	6EM	2015+	REC6EK-13761-00			REC68F-83688-10
F150 A/B/C/D/T	63P & 64P	2004-05	REC63P-13761-01	REC63P-13906-00	REC69J-85885-00	REC63P-82380-00
F150 A/T/B/D	63P & 64P	2005+	REC63P-13761-01	REC63P-13906-00	REC6S1-85885-00	REC63P-82380-00
F150 B/F	6BM & 6BN	2012+	REC63P-13761-01	REC63P-13906-00	REC6S1-85885-00	REC63P-82380-00
F150 C/G	6HP & 6HR	2017+	REC6DA-13761-00			REC68F-83688-10
F175 A/C	6FA,6HS,6HT	2014+	REC6DA-13761-00			REC68F-83688-10
F200 A/ T	60L & 60M	2000-05	REC69J-13761-00	REC69J-13906-00	REC69J-85885-00	REC68V-82380-00
F200 A/ T	60L & 60M	2006-07	REC69J-13761-00	REC69J-13906-00	REC6S1-85885-00	REC68V-82380-00
F200 C	6AL & 6AM	2006	REC6P2-13761-00	REC6P2-13906-00		
F200 A/B/C	6AL,6AM,6S19,6S29	20012+	REC6P2-13761-11	REC6P2-13906-00		
F200 B/F	6DA,6DB,6DV,6DW	2013+	REC6DA-13761-00			REC68F-83688-10
F225 A/ T	69J & 69K	2000-07	REC69J-13761-00	REC69J-13906-00	REC69J-85885-00	REC68V-82380-00
F225 A/B/C	6AS,6BB & 6AT	2012-15	REC6P2-13761-11	REC6P2-13906-00		
F250 A/T	6P2 & 6P3	2006-11	REC6P2-13761-00	REC6P2-13906-00		
F250 A/T	6P2 & 6P3	2012-13	REC6P2-13761-11	REC6P2-13906-00		
225G/F	250B	1999-03	REC6L5-13761-00			

CARBURADOR COMPLETO FULL CARBURATOR CARBURATORE COMPLETO CARBURATEUR COMPLET

REF	OEM
REC6F6-14301-06	6F6-14301-06

E40G (2008+)

new



REF	OEM
REC6B4-14301-00	6B4-14301-00

E15D (2003+)

new

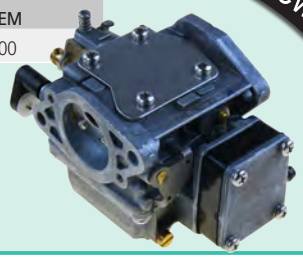

REF	OEM
PAF2.6-04000200	69M-14301-21

F2.5 ALL (2003+)



REF	OEM
PAF4-04140000	67D-14301-03

F4 (1998-05)



REF	OEM
REC6G1-14301-01	

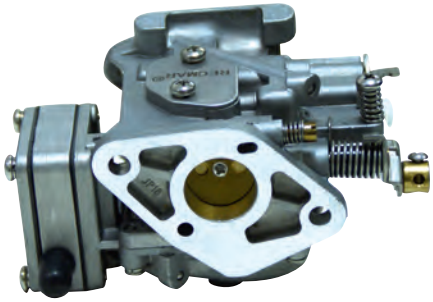

REF	OEM
PAF25-05070000	65W-14901-12

F25 ALL (1999-06)

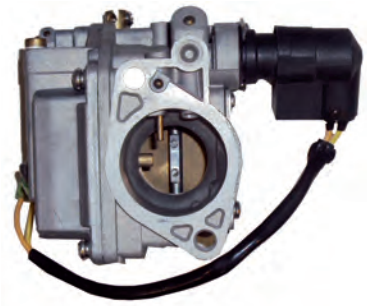

REF	OEM
REC61N-14301-04	

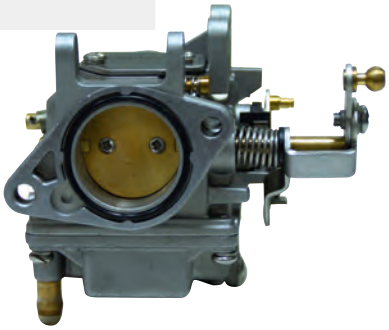

REF	OEM
REC6L5-14301-03	

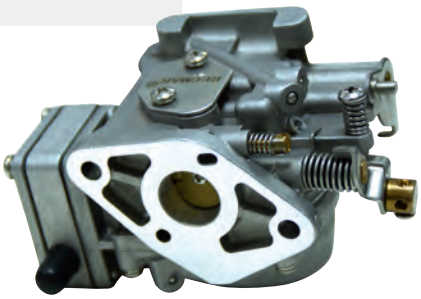

REF	OEM	
PAF15-07090000	66M-14301-00	Arranque manual Manual starter Messa in moto manuale Démarrage manuell
PAF15-07090000W	66M-14301-00	Arranque eléctrico Electric starter Messa in moto elettrica Démarrage électriquel

F9.9, F13.5, F15 (1998-07)



PAF15-07090000W



PAF15-07090000

REF	OEM
REC6E3-14301-05	



REF	OEM
REC66T-14301-60	



REF	OEM
REC6A1-14301-03	

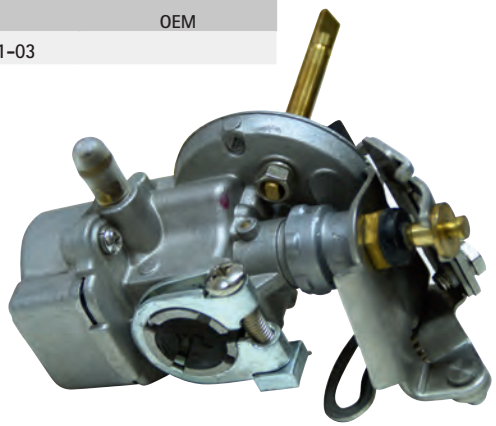

P. 99

REF	OEM	
REC63V-14301-00		REC63W-13610-00

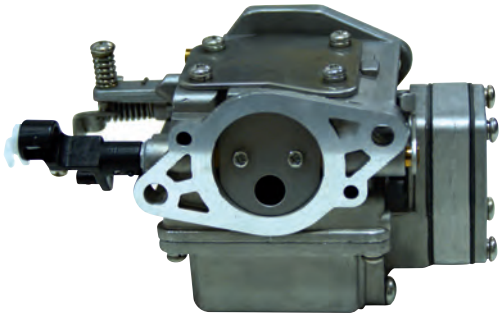

KIT 3 CARBURADORES — KIT 3 CARBURETORS — KIT 3 CARBURATORI — KIT DE 3 CARBURATEURS

REF	OEM
REC6K5-14301-03	6K5-14301-03 + 6K5-14302-03 + 6K5-14303-03



P. 37

REF
GEGC15



GUÍA CARBURADORES | GUIDE CARBURETORS | GUIDA CARBURATORI | GUIDE DES CARBURATEURS

			CARB	KIT		
2B, BMHS, MSHA, MSHB, MSHC, MSHD	6A1-6A14	1985-05	REC6A1-14301-03	REC6A1-W0093-01		
3A, AMHL, MSH	6L5	1988-99	REC6L5-14301-03	REC6G1-W0093-00	REC6G1-14985-00	REC6G1-14546-00
3A, AMHS, AMHL, AMH, MSHA, MSHB	6L50-6L59	2001-10	REC6L5-14301-03	REC6G1-W0093-00	REC6G1-14985-00	REC6G1-14546-00
AMH, AMHS	6L5A-6L5F	2011-15	REC6L5-14301-03	REC6G1-W0093-00	REC6G1-14985-00	REC6G1-14546-00
4AS	-6,00E+001	1994-95	REC6E3-14301-05		REC6E7-14385-00	
4AC	-6,00E+000	1994-98	REC6E3-14301-05		REC6E7-14385-00	
4CMHS, CMHL	6GP1	2016	REC6E3-14301-05		REC6E7-14385-00	
5C	-6,00E+003	1986-99	REC6E3-14301-05		REC6E7-14385-00	
5CS	-6,00E+004	1987-95	REC6E3-14301-05		REC6E7-14385-00	
5CMH	6M0	1994	REC6E3-14301-05		REC6E7-14385-00	
5C, CMHS, CMHL	6E30-6E39	2001-10	REC6E3-14301-05		REC6E7-14385-00	
5CMH, CMHS, CMHL	6E3A-6E3F	2011-15	REC6E3-14301-05		REC6E7-14385-00	
6C, CEM	6H6	1984-96	REC6G1-14301-01	REC6G1-W0093-00	REC6G1-14985-00	REC6G1-14546-00
6D, DEM	6H8	1984-96	REC6G1-14301-01	REC6G1-W0093-00	REC6G1-14985-00	REC6G1-14546-00
6J	6H6	1986	REC6G1-14301-01	REC6G1-W0093-00	REC6G1-14985-00	REC6G1-14546-00
6C, MSH, TRV	6M8	1997-98	REC6G1-14301-01	REC6G1-W0093-00	REC6G1-14985-00	REC6G1-14546-00
6C	6M80	2001	REC6G1-14301-01	REC6G1-W0093-00	REC6G1-14985-00	REC6G1-14546-00
6D	6M90-6M91	2001-02	REC6G1-14301-01	REC6G1-W0093-00	REC6G1-14985-00	REC6G1-14546-00
6CMH, CMHS, CMHL, MSHA, MSHB, MSHG, MSHD, MH, MHL, CWH	6M81-6M89	2002-10	REC6G1-14301-01	REC6G1-W0093-00	REC6G1-14985-00	REC6G1-14546-00
CMH, CMHL, CM, MH	6M8A-6M8B	2010-12	REC6G1-14301-01	REC6G1-W0093-00	REC6G1-14985-00	REC6G1-14546-00
8N	6G1	1984	REC6G1-14301-01	REC6G1-W0093-00	REC6G1-14985-00	REC6G1-14546-00
8C, CEM	6G1	1984-95	REC6G1-14301-01	REC6G1-W0093-00	REC6G1-14985-00	REC6G1-14546-00
8J	6G1	1986	REC6G1-14301-01	REC6G1-W0093-00	REC6G1-14985-00	REC6G1-14546-00
8C, TRV, MSH	6N0	1997-98	REC6G1-14301-01	REC6G1-W0093-00	REC6G1-14985-00	REC6G1-14546-00
8C, MSHZ, MSHA	6N00-6N09	2001-10	REC6G1-14301-01	REC6G1-W0093-00	REC6G1-14985-00	REC6G1-14546-00
8CMH, CMHS, CMHL	6N0A-6N0C	2011-12	REC6G1-14301-01	REC6G1-W0093-00	REC6G1-14985-00	REC6G1-14546-00
9.9FMH, FMHS, FMHL, FEMH, MHW, MSH, MSHZ, MSHA, MSHB, MSHC	63V-63V9	1995-10	REC63V-14301-00	REC63V-W0093-00	REC63V-14985-00	REC6G1-14546-00
FMH, FMHS, FMHL, MH	63VA-63VJ	2011-16	REC63V-14301-00	REC63V-W0093-00	REC63V-14985-00	REC6G1-14546-00
13.5AWH	63V	1998	REC63V-14301-00	REC63V-W0093-00	REC63V-14985-00	REC6G1-14546-00
13.5AMH, AMHS, AMHL	66S1-66S2	2003-04	REC63V-14301-00	REC63V-W0093-00	REC63V-14985-00	REC6G1-14546-00
15F.FEMH, FMHS, MHW, MSH, MSHA	63W-63W1	1995-02	REC63V-14301-00	REC63V-W0093-00	REC63V-14985-00	REC6G1-14546-00
E15CMHS	65F2	2003	REC63V-14301-00	REC63V-W0093-00	REC63V-14985-00	REC6G1-14546-00
E15D	6B4	2003+	REC6B4-14301-00	REC63V-W0093-00	REC63V-14985-00	REC6G1-14546-00
15FMHS, FMHL, FMH, MH, MSHB, MSHC, MSHG	63W2-63W9	2003-10	REC63V-14301-00	REC63V-W0093-00	REC63V-14985-00	REC6G1-14546-00
15FMHS, FMHL, FMH, MH	63WA-63WG	2011-16	REC63V-14301-00	REC63V-W0093-00	REC63V-14985-00	REC6G1-14546-00
25VE	61R	1996	REC61N-14301-04	REC61N-W0093-00	REC6L2-14385-00	REC61N-14392-00
25VM	61R	1997	REC61N-14301-04	REC61N-W0093-00	REC6L2-14385-00	REC61N-14392-00
E25A	61N	1998	REC61N-14301-04	REC61N-W0093-00	REC6L2-14385-00	REC61N-14392-00
25VM	61R0	2001	REC61N-14301-04	REC61N-W0093-00	REC6L2-14385-00	REC61N-14392-00
30G	61T	1996	REC61N-14301-04	REC61N-W0093-00	REC6L2-14385-00	REC61N-14392-00
30GE	61T	1997	REC61N-14301-04	REC61N-W0093-00	REC6L2-14385-00	REC61N-14392-00
40X, XW	66T	1998-00	REC66T-14301-60	REC66T-W0093-01	REC6E5-14385-02	REC6E5-14546-00
40XMH	66T4-66T8	2003-05	REC66T-14301-60	REC66T-W0093-01	REC6E5-14385-02	REC6E5-14546-00
40XMH, XMHS, XMHL	66TG-66TR	2009-12	REC66T-14301-60	REC66T-W0093-01	REC6E5-14385-02	REC6E5-14546-00
E40X, MLH	66T	1998-00	REC66T-14301-60	REC66T-W0093-01	REC6E5-14385-02	REC6E5-14546-00
E40X, XMH, XMHS, XMHL, MLHZ	66T0-66T8	2001-05	REC66T-14301-60	REC66T-W0093-01	REC6E5-14385-02	REC6E5-14546-00
E40X, XMHS, XMHLXMH, XMHX	66TA-66TR	2006-12	REC66T-14301-60	REC66T-W0093-01	REC6E5-14385-02	REC6E5-14546-00
E60H, HMHD, HMHDS, HMHDL, ELHB, MHZ, MLHA, HMHDX, HWHD	69D0-69D9	2001-10	REC6K5-14301-03	REC6H3-W0093-02	REC6G1-14985-00	REC6H3-14590-00
E60HMHD, HMHDS, HMHDL, HWDL	69DA-69DC	2011-12	REC6K5-14301-03	REC6H3-W0093-02	REC6G1-14985-00	REC6H3-14590-00
E60HE, HM, E-60H	6K5	1996-00	REC6K5-14301-03	REC6H3-W0093-02	REC6G1-14985-00	REC6H3-14590-00

JUNTAS CARBURADORES — CARBURETOR GASKES — GUARNIZIONI CARBURATORI — JOINTS DE CARBURATEUR

new

REF	OEM
REC6H4-14984-00	6H4-14984-00

25 - 90 HP

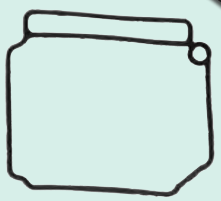

new

REF	OEM
REC6F5-14483-00	6f5-14483-00

E40/40J (2003+)

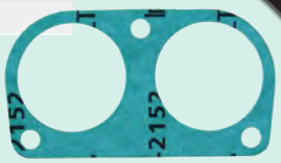

REF	OEM
REC6F5-14384-00	6F5-14384-00

E40GMH/JMH
40GWH/JWH



REF	OEM
REC6F5-14398-00	6F5-14398-00

E40GMH/JMH
40GWH/JWH



REF	OEM
REC677-14384-01	677-14384-01

E8D/DMH
9.9D
15D



REF	OEM
REC677-14227-00	677-14227-01

E8D/DMH
9.9D
15D



REF	OEM
REC6E7-14227-00	6E7-14227-00

9.9D
15D



REF	OEM
REC63V-14984-00	63V-14984-00

9.9F/FM/FEM/MS/MH/E9.9DMH
13.5AW
15F/FEM/MSH/FMH/MH
E15DMH



REF	OEM
REC63V-14126-00	63V-14126-00

9.9F/FM/FEM/MS/MH/E9.9DMH
13.5AW
15F/FEM/MSH/FMH/MH
E15DMH



REF	OEM
REC6L2-14399-00	6L2-14399-00

20DM/D/DEO/MLH
E25A
25VE/VM/B/BMH/BWH/HMH/NMH/NE/N/
MLH/D
30G/GE
E30HMH



REF	OEM
REC6L2-14384-00-00	6L2-14384-00

20DM/D/DEO/MLH
E25A
25VE/VM/B/BMH/BWH/HMH/NMH/NE/N/
MLH/D
30G/GE
E30HMH



REF	OEM
REC648-14384-01-00	648-14384-01

20C/CM
25D/DE
30A



REF	OEM
REC6H3-14457-01	6H3-14457-01

25Q
40V/TLR/H
C40T
50G/H
E60H
60F/TR
70B



REF	OEM
REC66T-14384-01	66T-14384-01

E40XM/X/MLH/XW
40XW/XM



REF	OEM
REC66T-14536-01	66T-14536-01

40X/E40X/E40M



REF	OEM
REC676-14984-00-00	676-14984-00

75A/AE/AET/AEM
E75B
85A/AE/AET/AED

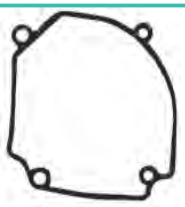

REF	OEM
REC64D-14384-1	64D-14384-01

100A/AETO/TLR
115A/B/BE/CE/BETO
130BETO
140AETO
150CET/ETD/AETO/
CETO
175AETO/BETO/ET
200ETD
200CETO/AET/BET
225BET/AET
175D/DET
150F/FET/TXR/AET
200AET/TLR/F/FET
225D/DET
115B/CET/TXR/TLR
130BET
250G/GET



REF	OEM
REC6A1-W0093-01	6A1-W0093-01

2B (1985-1988)



REF	OEM
REC677-W0093-00	677-W0093-00

9.9D (1985)
15D(1985)



REF	OEM
REC6G1-W0093-00	6G1-W0093-00

3A/AMH//MSH/ (1988-07)
6C/CEM/N/J (1984-96)
8C/CEM/N/J (1984-96)



REF	OEM
REC6E7-W0093-01	6E7-W0093-04

9.9D (1990-93)
15D (1990-93)



REF	OEM
REC67D-W0093-00	67D-W0093-00

F4 (1999-02)
F4A/AMH/MSH (1998-02)



REF	OEM
REC6L2-W0093-00	6L2-W0093-00

20D/M (1998-11)
25N/M (1988-14)

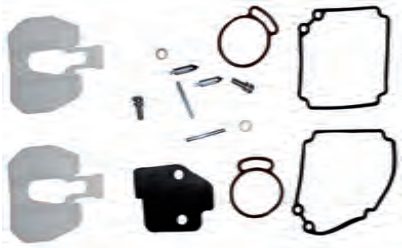

REF	OEM
REC66M-W0093-01	66M-W0093-01

F9.9C/FT9.9D (1998-08)
F15A/ELH/MHZ/PL (1998-07)



REF	OEM
REC689-W0093-02	689-W0093-02

20C/CM (1992-02)
25D/DE (1992-01)
30A (1992)



REF	OEM
REC63V-W0093-00	63V-W0093-00

9.9MH/FMH (1995-12)
E9.9
13.5AMH (2003-04)
15FMH/MH (1995-12)
E15DMH (2003)



new

REF	OEM
REC8542561	65W-W0093-02

F20A (2006-09)
F25A/E (2006-09)
FT/T25B/T (2006-09)
F40B (2006-09)
F30A (2006-09)

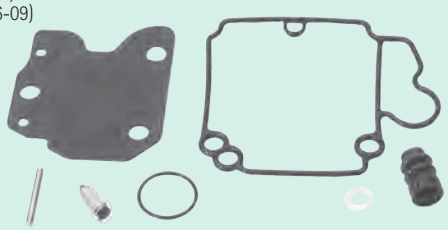

REF	OEM
REC6H4-W0093-03	6H4-W0093-03

25QEO (1993-1994)
40V/VM/VE (1995-14)
C40T/TL (1995-02)
40YET (2005-07)
50H/HR/HM/HW/HE (1995-03)



REF	OEM
REC6E9-W0093-02	6E9-W0093-02

40G/QE/QE-2/QM (1992-99)



REF	OEM
REC6H2-W0093-10	6H2-W0093-10

25B/BETO (1994-1995)
50G/GE (1993-1998)
60FE/TL/TR (1992-2007)
70B/BE (1992-2014)

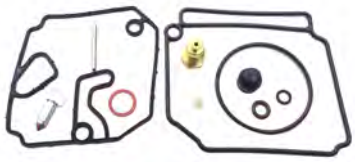

REF	OEM
REC6F6-W0093-00	6F6-W0093-00

E40 (2003)



REF	OEM
REC61N-W0093-00	61N-W0093-00

25VE/VM (1996-01)
25B/BMH/BW (2001-10)
E30HMH (2003)
30G/GE (1996-00)
30HMH/HW (2003-12)



REF	OEM
REC6E9-W0093-03	6E9-W0093-03

40QEZ/QWC (1997-98)
C40 2Cyl (1995-98)

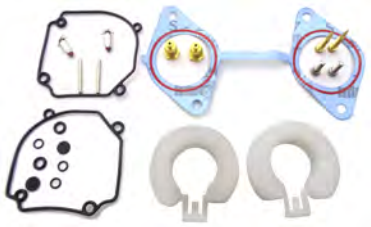

REF	OEM
REC6H4-W0093-01-00	6H4-W0093-01

40H/E (1985-88)
50D (1985-88)



REF	OEM
REC696-W0093-00	696-W0093-02

E48CMH (2003)
55B/BE/BM (1992-02)
E55CMH (2003-05)

Para dos carburadores
For two carburetors
Contenuto per due carburatori
Pour 2 carburateurs



REF	OEM
REC66T-W0093-01	66T-W0093-01

40XMH/XW (2000-13)
E40X/MLH/XMH (2000-13)



new

REF	OEM
REC84419M	696-W0093-01 696-W0093-02

F20A (2006-09)
F25A/E (2006-09)
FT/T25B/T (2006-09)
F40B (2006-09)
F30A (2006-09)

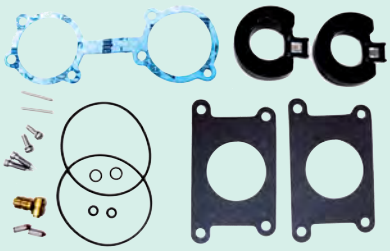

REF	OEM
REC6H1-W0093-01-00	6H1-W0093-01

60FE-T/FEO (1985-91)
70B/BEH/CEL (1985-90)



REF	OEM
REC6H3-W0093-02	6H3-W0093-02

E60H/MHZ/MLH/HMHD/HW/
HEHM (1997-14)



REF	OEM
REC6H0-W0093-00	6H0-W0093-00

C80 (1997)

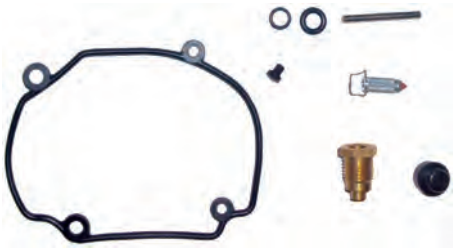

REF	OEM
REC6H1-W0093-10	6H1-W0093-10

75CET (1998-2014)
75TLR (2000-02)
80A (2000-02)
90AE/TR/TL (1992-14)

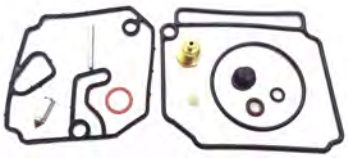

REF	OEM
REC67F-W0093-00	

F80A/TLR/ (1999-2001)
F100A/TLR/TRZ/TLR (1999-2001)

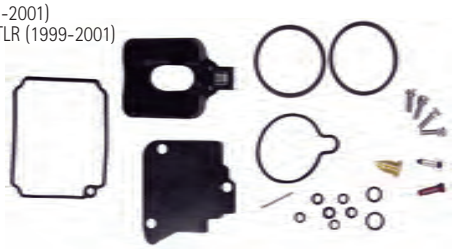

REF	OEM
REC6E5-W0093-07	6E5-W0093-07

115BE/B (1996-2002)
115C/CET (2007-13)
130B/9BET (2007)



REF	OEM
REC6N6-W0093-02	6N6-W0093-02

115BETO/CETO (1990-91)
L/130 BETO (1990-91)



REF	OEM
REC6E5-W0093-08	6E5-W0093-08

115 BE (1997)



REF	OEM
REC6E5-W0093-06	6E5-W0093-06

115B/BETO/CEO/CETO (1992-1995)
130BETO (1993-1995)
L150CETO (1992-1995)
175BETO (1992-95)
200BETO (1992-95)
200CETO (1992-93)
225BETO (1993-95)



REF	OEM
REC64D-W0093-00	64D-W0093-00

150A/AET/GET/FET/F (1996-00)
175DET/FET (1996-00)
200F/FET/G/GET (1996-00)
225D/DET (1996-97)



REF	OEM
REC6K7-W0093-09	6K7-W0093-09

225AET (1987-91)
PROV200 (1991)
150CET (1990-91)
175 BETO (1990-91)
200BET/ET (1990-91)
225BET(1990-91)



REF	OEM
REC61A-W0093-01	61A-W0093-01

225C/CET (1994-95)
250B (1995-02)
250A/AET (1992-06)



AGUJA CARBURADOR NEEDLE VALVE

REF	OEM
REC61N-14392-00	62Y-14392-00

2.5>60HP



REF	OEM
REC6G1-14546-00	6G1-14546-01

8>40HP



REF	OEM
REC626-14390-90	626-14390-90

9.9D/15D



REF	OEM
REC677-14343-68	677-14343-68

9.9D/15D



REF	OEM
REC6E8-14390-12	6E8-14390-12

9.9-15HP
E8D/9.9D/15D



REF	OEM
REC6E5-14546-00	6E5-14546-00

25-250HP



SPILLO CONICO CARBURATORE SIEGE, POINTEAU ET GICLEUR

REF	OEM
REC6F5-14390-21	6F5-14390-21

40G/E40G
40J/E40J



REF	OEM
REC6F6-14341-00	6F6-14341-00

40G/40J
E40G/E40J



REF	OEM
REC696-14590-01	696-14590-01

48-55HP
E48CMH
E55CMH



REF	OEM
REC6H3-14590-00	6H3-14590-01

E60/60FE/TR
70BET/TR
F80-F100



REF	OEM
REC688-14947-00	688-14947-00

75A/AE
85A/AE



REF	OEM
REC692-14590-01	692-14590-00 692-14590-01

75A,C,TLR (1990-16)
80A (1984-02)
85A (1990-03)
90A,T (1984-18)

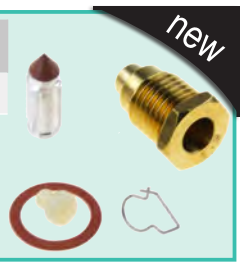

TORNILLOS CARBURADOR BOLT SCREW VITE CARBURATORE VIS DE CARBURATEUR

REF	OEM
REC624-42542-00	90387-06119

3>300HP



REF	OEM
REC647-14323-00	647-14323-00

E8D
4A/MS
9.9D
20C
5C
15D
25D
30A



REF	OEM
REC6F5-14323-00	6F5-14323-01

E40G/E40J
40G/40J



REF	OEM
REC692-14923-00	692-14923-00

40>90HP



REF	OEM
REC679-14923-00	679-14923-00

9.9F/M
E9.9D
15F/M
E15D
13.5 AM
8N/C/J
6C/D/TR/M
3A



REF	OEM
REC663-14923-00	663-14923-00

E48C
55B
E55CMH



REF	OEM
REC6A0-14325-00	6A0-14325-00

15>300HP



REF	OEM
REC6E5-14328-01	6E5-14328-01

115>225HP



REF	OEM
REC50M-14355-00	50M-14355-00

20>50HP



REF	OEM
REC64D-14394-00	64D-14394-00

115-225HP



REF	OEM
REC66T-14992-00	66T-14992-00

40X/E40X/E40M



REF	OEM
REC6E5-14323-03	6E5-14323-03

115>250



VÁLVULA DE LÁMINAS — VALVE OF SHEETS — VALVOLA — CLAPET D'ADMISSION

REF	OEM
REC6F6-13610-00	6F6-13610-00

40G/E40G
40J/E40J

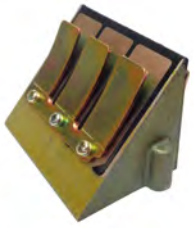

REF	OEM
REC688-13610-00	688-13610-00

75A,C,T / E75 (1990+)
80A (1984-02)
85A (1900+)
90A,TR,TLR (2003+)
2T/Strokes

new



REF	OEM
REC63W-13610-00	63W-13610-00

9.9/15 HP (1995+)
2T/Strokes

new

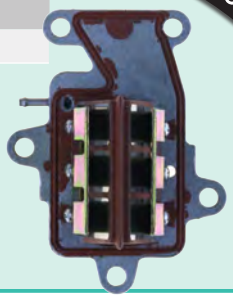

PASADOR DE BOYA — PIN FLOAT — SPINOTTO GALLEGGIANTE — AXE DE FLOTTEUR

REF	OEM	
REC688-14548-00	688-14548-00	3>90HP
REC676-14186-00	676-14186-00	3>100HP
REC647-14386-10	647-14386-10	4AC/M/AS FT/F9.9A/B 5C/CM/CS T9.9EL 9.9D F8AM/BM 15D
PAF25-05070019	6H4-14548-00	9.9>100HP
REC6E5-14386-01	6E5-14386-01	9.9>200HP

REF	OEM	
REC663-14548-00	663-14548-00	E48C 55B E55CMH
REC6E5-14386-02	6E5-14386-02	115>200HP





BOYAS — FLOATS

REF	OEM
REC6G1-14985-00	647-14323-00

3A/M, E60, 8C-M/T, 60F
70B, 40N-H, 50E-D, 6C/M/D



REF	OEM
REC647-14385-00	647-14385-00

4AC, 5C, 9.9D, 15D



REF	OEM
REC6E7-14385-00	6E7-14385-00

4AC, 5C, E8D, 9.9D, 15D



REF	OEM
REC676-14966-00	679-14966-00

8>100HP



REF	OEM
REC63V-14985-00	63V-14985-00

9.9F-M, 13.5A, 15F-M, F20, F25, F30, F40



REF	OEM
REC6L2-14385-00	6L2-14385-00

13.5>60HP



GALLEGGIANTE — FLOTTEUR DE CARBURATEUR

REF	OEM
REC648-14385-00	648-14385-00

20C, 25D, 30A



REF	OEM
REC6F6-14385-00	6F6-14385-00

40G/J, E40G/J



REF	OEM
REC676-14985-01	676-14985-01

40Q, 75A, E75B, 80A, 85A, 90A/E



REF	OEM
REC6E5-14385-02	6E5-14385-02

40X, E40, 100A, 115C, 115A-B, 130B, 150F/A
175D/A, 200A, 200G/F/B, 225D, 225A, 250G



new

REF	OEM	2T STROKES	4T STROKES
REC6H4-14985-01	6H4-14985-00 6H4-14985-01 650-14385-00 6M6-14385-00	✔ 25-90 hp	✔ 75-100 hp



CONECTOR DE CARBURADOR — ACCELEROGRAPH CONTROL — CONTROLLO DELL'ACCELEROGRAFO — ATTACHE TIGE D'ACCELERATEUR

new

REF	OEM
PAF15-07000016	661-41262-01 661-41262-02



ELEMENTO FILTRO DEL CARBURADOR | ELEMENT FILTER (CARB INLET) | FILTRO CARBURATORE | FILTRE DU CARBURATEUR

REF	OEM
REC67F-14371-01	67F-14371-01

F75 (2003-04)
F80 (2002-03)
F90 (2003-04)
F100 (2002-03)



ACELERADOR | ACCELERATOR | ACCELLERATORE | ACCELERATEUR

VARILLA DE ACELERADOR | ROD ACCELERATOR LEVER | ASTA ACCELLERATORE | TIGE LEVIER ACCELERATEUR

REF	OEM
REC6H3-41217-00	6H3-41217-00

50G/E60H
60F/T
70B/T



REF	OEM
REC688-41217-00	688-41217-00

80A
90A/E



REF	OEM
REC692-41256-00	692-41256-00

75A/B
80A
85A
90A



REF	OEM
REC6G5-41217-00	6G5-41217-01

150/200ETN
150/200AETO
175AET-O
225AETO



SISTEMA ELÉCTRICO
ELECTRIC SYSTEM

SISTEMA ELETTRICCO
SYSTÈME ÉLECTRIQUE

SENSORES | SENSORS | SENSORE | CAPTEURS

SENSOR TPS | TPS SENDER | SENSORE TPS | CAPTEUR TPS

REF	OEM
REC6C5-85885-00	6C5-85885-00



REF	OEM
REC6S1-85885-00	6S1-85885-00



REF	OEM
REC69J-85885-00	69J-85885-00



REF	OEM
REC68V-85885-00	68V-85885-00



SENSOR MAP | MAP SENSOR | SENSORE MAP | CAPTEUR MAP

REF	OEM
REC68V-82380-00	68V-82380-00



REF	OEM
REC68F-83688-10	68F-83688-10



REF	OEM
REC63P-82380-00	63P-82380-00



REF	OEM
REC68F-83688-00	68F-83688-00



P. 90
Guía inyectores y sensores
Guide injectors et senders
Guida iniettori e sensori
Guide injecteurs et sondes

SENSOR TEMPERATURA DEL AGUA | SENSOR, WATER TEMPERATURE | SENSORE TEMPERATURA ACQUA | CAPTEUR DE TEMPERATURE

new

REF	OEM
PAF25-05010201	65W-85790-00

F20A (1998-06)
F25A,E,M (1998-09)
T25 / FT25 (1998-09)



new

REF	OEM
PAT40-05000100	6AH-82560-00

F9.9H (2009+)
F13.5B (2007-09)
F15C,E,M (2007+)
F20B, E, M (2007+)



REF	OEM	2T STROKES
REC688-82560-10	688-82560-10	40 - 300 hp (1984-16)

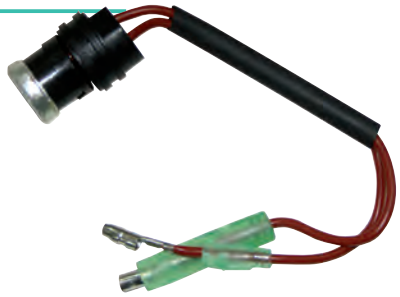

SENSOR ACCELERACIÓN TS | SENSOR | SENSORE ACCELLERATORE TS | CAPTEUR D'ACCELERATEUR TS

new

REF	OEM	2T STROKES	4T STROKES
REC6X2-85885-10	6X2-85885-10 61A-85885-00	✔	✔

80 - 300 HP

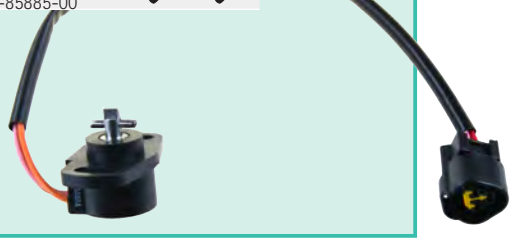

SENSOR PRESIÓN DE ACEITE | SENSOR, OIL PRESSURE | SENSORE PRESIONE DELL'OLIO | SONDE DE PRESSION D'HUILE

new

REF	OEM
PAF15-07010103	65W-82504-00 62Y-82504-10

F9.9 - F40



SENSOR DE OXÍGENO | OXYGEN SENSOR | SENSORE OSSIGENO | SONDE À OXYGENE

REF	OEM
REC67H-8592A-01	67H-8592A-01

LX200/5X200 (2001-05)
DX150/LX150 (2001-05)
SX150/VX150 (2001-05)



REF	OEM
REC68F-8592A-00	68F-8592A-00

200HP (2001-2007)
150HP (2001-2007)
175HP (2001-2007)
L, Z, V-PETO, TLR, NETO



BOBINAS COILS BOBINE BOBINES

BOBINA DE LUZ — COIL LIGHTING — BOBINA LUCE — BOBINE D'ÉCLAIRAGE

REF	OEM	2T STROKES	4T STROKES
REC63V-85533-00	63V-85533-00	✔	

9,9/15 F/M (1995+)
13,5 AM (2003-04)
E9.9/15 (2003)



REF	OEM	2T STROKES	4T STROKES
REC66T-85533-00	66T-85533-00	✔	

E40 (1998+)
40X/M (1998+)



REF	OEM	2T STROKES	4T STROKES
PAF15-07000400	66M-85533-00		✔

F15 ALL (1998-07)
F9.9 ALL (1998-08)
F13.5 ALL (2002-07)

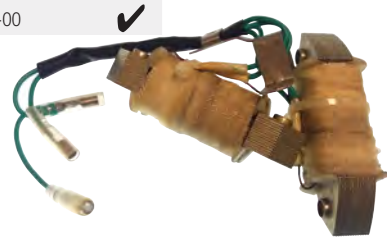

BOBINA DE IGNICIÓN — IGNITION COIL — BOBINA AVVIAMENTO — BOBINE D'ALLUMAGE

new

REF	OEM	2T STROKES	4T STROKES
REC6E0-85570-00	6E0-85570-00	✔	

4A/M/C (1996-18)
5C (1996-15)



new

REF	OEM	2T STROKES	4T STROKES
REC6H3-85570-10	6H3-85470-10	✔	

E60H/M (2001+)
60F (1984-91)
70B/C/E (1984-91)



new

REF	OEM	2T STROKES	4T STROKES
REC6B4-85570-01	6B4-85570-00 6B4-85570-01	✔	

E9.9D (2003-13)
E15D (2003+)



REF	OEM	2T STROKES	4T STROKES
REC6R3-85570-01	6R3-85570-01	✔	

200 A/E/F (1997-10)
150 F/T (1994-07)
175D (1996-03)
225D (1996-09)
130 B/T (1994-07)
115 C/T (1994-13)
130 BETO (1994-01)



REF	OEM	2T STROKES	4T STROKES
PAF25-05120000	65W-85570-01		✔

F20A/E (1998-06)
F25A/B/T/M (1998-09)



REF	OEM	2T STROKES	4T STROKES
PAF15-07000600	66M-85570-00		✔

F15 ALL (1998-07)
F9.9 ALL (1998-08)
F13.5 ALL (2002-07)



REF	OEM	2T STROKES	4T STROKES
REC6F5-85570-11	F5-85570-13		✔

F9.9	(2009+)
F20/25 B/F	(2007+)
F13.5 B/M	(2007+)
F15 C/M/E	(2007-09)



REF	OEM	2T STROKES	4T STROKES
REC697-85570-00	697-85570-00	✔	✔

50G/ETOL	(1995-07)
75T/L/A/C/B	(1997-14)
85A/E/TDL/X	(1997-03)
55 B/M/ET	(1995-02)
90A/T/ETOL	(1997-14)
60F/T/ETOL	(1995-07)
70B/E/ETOL	(1995-14)



REF	OEM	2T STROKES	4T STROKES
REC61N-85570-01	61N-85570-00 61N-85570-01	✔	

20 D, DEM, MLH, MSH, DMH, DWO, DWH (6L3 - 6L3A) (1994-11)
E25 A (61N) (1998)
25B, BMH, BWC, BWHVM (61R0 - 69RG) (2001-15)
E25 BMH (63P3 - 69PG) (2003-15)
25 N, NE, MLH, MSH, NMH, NW,
MH (6L2 - 6L2G) (1994-15)
30 G, C30 ELRW (61T - 61T0) (1998-01)
330 HMH (60B3) (2003)



new

REF	OEM	2T STROKES	4T STROKES
REC6A1-85570-00	6A1-85570-00	✔	

2B,C,M (1995-10)



REF	OEM	2T STROKES	4T STROKES
REC697-85570-10	697-85570-11	✔	

55HP 2 Cil.	(1989-94)
90A/ETN/AETO	(1984-88)
80A	(1984-89)



new

REF	OEM	2T STROKES
REC63V-85570-00	63V-85570-00 65E-85570-00	✔

9.9/15/13.5 (1995+) 63V & 63W
E15 (2003) 65F & 65G
9.9/15 F/M (1995-13)
13.5A (2003-04)
E15 (2003)



REF	OEM	2T STROKES	4T STROKES
REC689-81311-40	66M-85570-00	✔	

3A	(1985-92)
40Q	(1990-98)



REF	OEM	2T STROKES	4T STROKES
REC6E5-85570-11	6E5-85570-11 6E5-85570-10	✔	

115HP 4Cil.	(1984-91)
140A/E	(1984-89)
150	
175	
200HP	(1984-89)



new

REF	OEM	2T STROKES	4T STROKES
REC67F-85570-00	67F-85570-00		✔

F80A/T (67G-67G5) (1999-06)
F100A/B/C/T (2003-12)

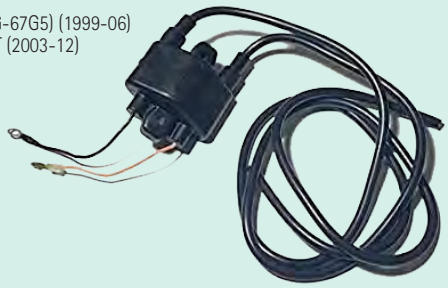

REF	OEM	2T STROKES	4T STROKES
REC66T-85570-00	66T-85570-00	✔	

E40	(1998+)
40X/M	(1998+)



new

REF	OEM	2T STROKES	4T STROKES
REC6F6-85530-01	6F6-85530-01	✔	

EK40G (2018)
E40G (2006+)

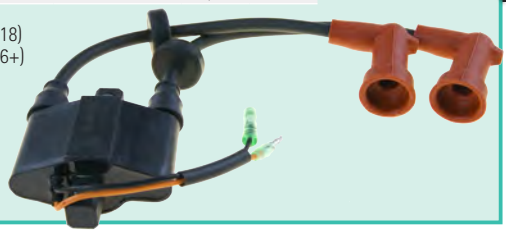

REF	OEM	2T STROKES	4T STROKES
REC6E7-85570-19	6E7-85570-19-00		✔

9.9/15HP (1988-95)
20C/D (1985-93)
25C/D (1985-93)



BOBINA DE T.C.I. — T.C.I. COIL — BOBINE T.C.I. — BOBINE T.C.I.

REF	OEM	2T STROKES	4T STROKES
PAF2.6-04000600	69M-85640-00		✔

F2.5 ALL (2003+)



REF	OEM	2T STROKES	4T STROKES
PAF4-04000038	67D-85640-00		✔

F4 ALL (1998+)



BOBINA DE CARGA — CHARGE COIL — BOBINA DI CARICA — BOBINE DE CHARGE

REF	OEM	2T STROKES	4T STROKES
REC63V-85520-00	63V-85520-00	✔	

15F (1995+)
9,9 F/M (1995+)
13,5 A (2003-04)

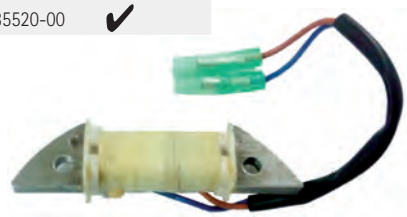

REF	OEM	2T STROKES	4T STROKES
PAF15-07000300	66M-85520-00		✔

F15 ALL (1998-07)
F9.9 ALL (1998-08)
F13.5 ALL (2002-07)



REF	OEM	2T STROKES	4T STROKES
REC66T-85520-00			✔

E40 (1998+)
40X/M (1998+)



REF	OEM	2T STROKES	4T STROKES
REC69P-85541-09	69P-85541-09		✔

E25 B, BMH (69P1 - 69PG) (2001-15)
25 B, BMH, BWC, BWH, MWS (69R1 - 69RG) (2001-15)
E30 HMH (60B3) (2003)
30 H, HMH, HWH, HWS, HWL, HW, HWC (69S3 - 69SG) (200315)

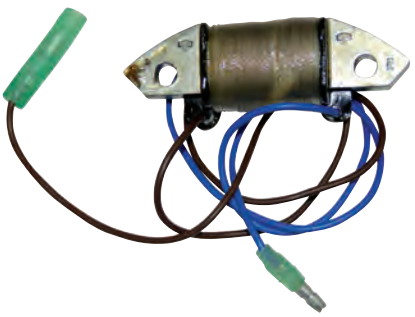

new

REF	OEM	2T STROKES	4T STROKES
REC6H3-85520-00	6H3-85520-00	✔	

E60H/M (2001+)
60F (1984-91)
70B/C/E (1984-91)



new

REF	OEM	2T STROKES	4T STROKES
REC6B4-85520-00	6B4-85520-00	✔	

E9.9D / E15D

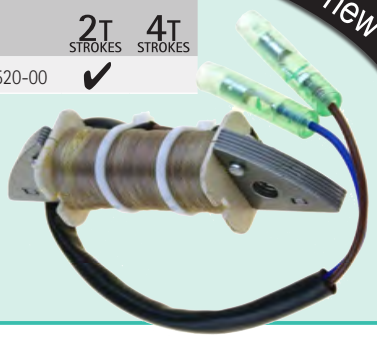

BOBINA DE PULSACIÓN — PULSER COIL — BOBINE ACCENSIONE — BOBINE PULSEUR

new

REF	OEM	2T STROKES	4T STROKES
PAF20-05000100	6AH-85580-00		✔

F9.9H (2009+)
F13.5B (2007-09)
F15C/E/M (2007)
F20/F30 (2009+)

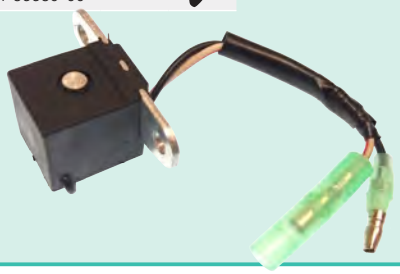

REF	OEM	2T STROKES	4T STROKES
REC63V-85580-01	63V-85580-01	✔	

9,9/15 F/M (2003+)
13,5A (2003-04)



new

REF	OEM	2T STROKES	4T STROKES
REC6B4-85580-00	6B4-85580-00	✔	

E9.9D / E15D



REF	OEM	2T STROKES	4T STROKES
REC66T-85580-00	66T-85580-00	✔	

E40 (1998+)
40X/M (1998+)



REF	OEM	2T STROKES	4T STROKES
PAF25-05110000	65W-85580-00		✔

F25 ALL (1998-09)
F40 E
B (2000-09)
F30 A
ERZ
ML (2001-09)



REF	OEM	2T STROKES	4T STROKES
PAF15-07000200	66M-85580-00		✔

F15 ALL (1998-07)
F9.9 ALL (1998-08)
F13.5 ALL (2002-07)



BUJÍAS SPARK CANDELE BOUGIES

2T STROKES		REF CHAMPION
2	1984	CHAL90C
3	1988	CHAQL86C
5	1984	CHAQL82C CHAL82C
6	1986	CHAQL82C CHAL82C
8	1984	CHAQL82C CHAL82C
09/09/19	1984	CHAQL82C CHAL82C
20	1996	CHAQL82C CHAL82C
25	1999	CHAQL82C CHAL82C
30	1984	CHAQL82C CHAL82C
40	1984	CHAQL82C CHAL82C
50	1995	CHARA8HC
70	1984	CHAQL78C
90B	1984	CHAQL78C
90	1984-00	CHAQL78C

2T STROKES		REF CHAMPION
115	1984-05	CHAQL78C
130	1989	CHAQL78C
150 Carb	1996	CHAQL82C CHAL82C
150 EFI	1999-00	CHAQL78C
150 EFI	2000	CHARC12YC
150 MPDI	2000	CHARC12YC
150 VMAX	1997	CHAQL78C
175	1984	CHAQL78C
175 VMAX	1992	CHAQL78C
200 LX	1999	CHAQL78C
200 LZ	1999	CHARC9YC4
200 SX	1999	CHAQL78C
200 VX	2000	CHAQL78C
200 Z	2000	CHARC9YC4
225	2000	CHAQL77JC4 CHAL77JC4
250	2000	CHAQL77JC4 CHAL77JC4

4T STROKES		REF CHAMPION
2,5F	2003	CHAQL86C
4F	1999	CHAQL86C
9.9Fi	1996	CHAZ9Y
9.9T	1996	CHAZ9Y
15F	1999	CHARA8HC
25F	1998	CHARA8HC
30F	2001	CHARA8HC
40F	1999	CHARA8HC
50F	1999	CHARA8HC
60	2002	CHARA8HC

CHAMPION





REF
REC004



REF
CHAPRO5U

	REF NGK	OEM
2B	NGKBR5HS	94702-00249-00
F2,5A/F4A	NGKBR6HS	94701-00248-00
3A/F6A/F8C/FT8D/F9,9F/F9,9J/FT9,9G/FT9,9L	NGKBR6HS-10	94702-00274-00
F4B/F5A/F6C	NGKCR6HS	94702-00372-00
4A/5C/20C/25D/40X	NGKBR7HS	94701-00110-00
6C/8C/9,9D/9,9F/15D/15F/20D/25N/25V/25B/30D/40H/40V	NGKBR7HS-10	94702-00271-00
F8B	NGKCR5HSB	94701-00300-00
F9,9A/F9,9B	NGKCR6HS	94701-00282-00
F9,9C/FT9,9D/F15A/F25A/FT25B/F30A/F40A/F40B/F50A/FT50B/FT50C	NGKDPR6EA-9	94701-00375-00
F15C/F20B/F25D/F25G/FT25F/F30B/F40F/F50F/F50H/FT50G/FT50J/F60C/F60F/FT60D/FT60G	NGKDPR6EB-9	94702-00418-00
40Q	NGKBR8HS	94701-00195-00
30G/50D/50G/50H/55B/60F/70B/75A/75C/80A/85A/90A/100A/115A/115B/115C/140A/150A/150C/150F/175A/175B/175D/200A/200B/200F/200G/225D/(L)250A/(L)250G	NGKBR8HS-10	94702-00247-00
F60A/FT60B	NGKDPR5EA-9	94701-00406-00
F70A	NGKLKR7E	94702-00429-00
F80A/F80B/F100A/F100B/F100D/F(L)150A/F(L)200A/F(L)225A	NGKLFR5A-11	94702-00391-00
130B/140B/200C/225B/250B/225G (VMAX)	NGKBR9HS-10	94701-00309-00
F(L)115B	NGKLKR6E	94702-00437-00
F(L)115A/F175A/F(L)200C/F(L)200F/F(L)200G/F(L)225B/F225C/F(L)250A/F(L)250B/F(L)300A/F(L)350A/F(L)225F/F(L)250D/F(L)300B	NGKLFR6A-11	94702-00400-00
(L)Z150P/Z150Q (VMAX)	NGKBKR6EKU	94702-00405-00
Z175G/(L)Z200N/Z200P (VMAX)/(L)Z250D/Z250F (VMAX)/(L)Z300A	NGKBKR7EKU	94702-00404-00
STERN-DRIVE ESSENCE	NGKBR6FS	94701-00365-00
WAVERUNNER		
XL800/XLT800/GP800/WB800/GP800R	NGKBR8ES	94701-00204
XLT1200/XL1200LTD/GP1200R/GP1300R	NGKBR8ES-11	94702-00396
SJ650/650T/650TL/650TX/FX1/PRO TX700/WB700/XL700/WVT700/W.RAIDER 760/WVT760/XL760/WB760/GP760/W.RAIDER 1100/WVT1100/SUV1200/GP1200/XL1200	NGKBR8HS	94701-00195
SJ700/W.RAIDER 700	NGKBR7HS	94701-00110
FX140/FX140 CRUISER/FX160/FX160 CRUISER/FX1100 HO/HO CRUISER/VX 1100 SPORT & DELUXE	NGKCR9EB	94702-00409

NGK



VOLANTE DE MOTOR — FLYWHELL — VOLANTE MOTORE — VOLANT MOTEUR

SIN DIENTES (MANUAL) — WITHOUT TOOTH — SENZA DENTI (MANUALE) — MANUEL SANS DENT

new

REF	OEM
PAF20-05000500	6AH-85550-00

F9.9H (2009+)
F13.5B (2007-09)
F15C,E,M (2007+)
F20B, E, M (2007+)



new

REF	OEM
PAF15-07070000	66M-85550-00

F9.9C, M (1998-08)
FT9.9D (1999-08)
F13.5A (2002-07)
F15A,E,M (1998-07)



new

REF	OEM
PAF25-05150000	65W-85550-01

F20/F25 (A) (1998-08)
F40B/E/T (2000-09)
FT/T25 (2000-09)
F30A/E/M (2001-09)



ELÉCTRICO — ELECTRIC — ELETTRICO — ÉLECTRIQUE

new

REF	OEM
PAF20-05000500W	6AH-85550-10

F9.9H (2009+)
F13.5B (2007-09)
F15C,E,M (2007+)
F20B, E, M (2007+)



new

REF	OEM
PAF15-07070100W	66M-85550-10

F9.9C, M (1998-08)
FT9.9D (1999-08)
F13.5A (2002-07)
F15A,E,M (1998-07)



MOTORES DE ARRANQUE | STARTERS | MOTORINI AVVIAMENTO | DEMARREUR

REF	OEM			2T STROKES	4T STROKES	
PH130-0061	6L2-81800-10, 11, 12 682-81800-10, 11, 12	12V 0.4 kw	10 CCW	✔		REC89-825096T01



9.9-15HP (1984-97)
25HP (1988-98)
6HP (1984-90)
8HP (1984-90)

REF	OEM			2T STROKES	4T STROKES	
PH130-0049	689-81800-10, 11, 12, 13	12V 0.6 kw	11 CCW	✔		REC89-825096T01

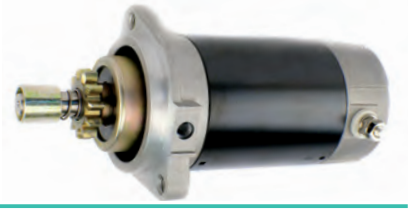

25-40HP
30HP/20HP

REF	OEM			2T STROKES	4T STROKES	
PH130-0062	6J4-81800-00, 01 6G8-818000-10, 11 6F5-81800-10, 11	12V	11 CCW	✔		REC89-825096T01



30 HP (1987+)
40-50 HP (1989+)

REF	OEM			2T STROKES	4T STROKES	
PH130-0084	66M-81800-00, 01, 02	12V	9 CCW	✔		REC89-825096T01



F9.9, F15, F13.5 (1998-08)

REF	OEM			2T STROKES	4T STROKES	
PH130-0005	6E5-81800-10, 11, 12	12V 1.1 kw	9 CCW	✔	✔	REC61A-81941-00



F45 / F50
115-130 HP V4
150-175-200 HP V6

new

REF	OEM			2T STROKES	4T STROKES	
PH130-0028	67C-81800-00, 01, 02	12V	9 CCW		✔	PH375-0036

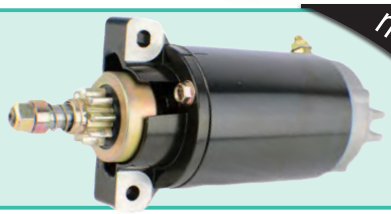

F30 (2000-09)
F40 (2001-09)

REF	OEM			2T STROKES	4T STROKES	
PH130-0063	6H4-81800-10, 11, 12	12V	9 CCW	✔		P. 114



40-50 HP (1984-1988)

REF	OEM			2T STROKES	4T STROKES	
PH130-0051	99999-03938 61H-81800-00, 01 6K7-81800-10 6N7-81800-00, 01, 10	12V 1.4 kw	9 CCW	✔		PH375-0047



115-250HP V4

REF	OEM			2T STROKES	4T STROKES	
PH130-0059	61A-81800-00, 01 69L-81800-00 69W-81800-00	12V	9 CCW	✔	✔	REC61A-81941-00 REC89-825096T01 (F40/50/60)



V200 (1998+)
F40 (2002-06)
F50 (2003-14)
F60 (2003-07)
225 HWP (1994+)
250 HP (1990+)

REF	OEM			2T STROKES	4T STROKES	
PH130-0050	6H3-81800-10, 11	12V 0.6 kw	9 CCW	✔		REC688-81950-10

50HP (1993-14)
60HP (1991+)
70HP (1984-14)



REF	OEM			2T STROKES	4T STROKES	
PH130-0007	99999-03249 697-81800-10, 11, 12 676-81800-10	12V 1.0 kw	9 CCW	✔		P. 114

55-60HP 2 cyl



REF	OEM			2T STROKES	4T STROKES	
PH130-0058	688-81800-10, 11, 12	12V	9 CCW	✔		REC688-81950-10

75 HP (1994-99)
85 HP (1991-96)
90 HP (1984-14)
85HP (1992-03)
80HP (1993-02)



REF	OEM			2T STROKES	4T STROKES
PH130-0056	6CJ-81800-00 6C5-81800-00 68F-81800-00, 01, 03	12V 1.4 kw	13 CCW	✔	✔

LZ 150-175 HP (2000+)
VZ 150-175 HP (2000+)
Z 150-175 HP (2000+)
LZ 200-Z200 HP (2000+)



REF	OEM			2T STROKES	4T STROKES	
PH130-0034	66M-81800-01, 02	12V	9 CCW		✔	PAF15-05170300W

F9.9
F13.5
F15 HP (2000-08)



REF	OEM			2T STROKES	4T STROKES	
PAF20-05000900W	6AH-81800-00, 01	12V	11		✔	P. 114

F13,5 ALL (2007-09)
F15 (2007-14)
F20 ALL (2007-14)



REF	OEM			2T STROKES	4T STROKES	
PH130-0029	65W-81800-00, 01, 02, 03	12V	9 CCW		✔	PH375-0034

F20
F25HP (1999-09)
F30/F40 (2005-09)



REF	OEM			2T STROKES	4T STROKES
PH130-0057	68V-81800-00, 01, 02	12V 1.4 kw	13 CCW		✔

F80 (2005+)
F100 (2005+)
F115 (2000+)
LF115 (2000+)



REF	OEM			2T STROKES	4T STROKES
PH130-0055	67F-81800-01, 02, 03, 04	12V	1.4 kw 13 CCW		✔

F80 HP (1999+)
F100 HP (1999+)



REF	OEM			2T STROKES	4T STROKES
PH130-0074	69J-81800-00, 01	12V	1.4 kw 13 CCW		✔

F200, F225 HP (2002-2007)



REF	OEM			2T STROKES	4T STROKES
PH130-0073	63P-81800-00 6BR-81800-00, 01	12V	1.4 kw 13 CCW		✔

FL, F150 AET, X, L (2009-11)
FL, F200 CETX (2009-11)
FL, F225 BET
X, U, CET, L (2009-11)
FL, F250 AET, X, U, BET, X, U (2009-11)



REF	OEM			2T STROKES	4T STROKES
PH130-0076	60V-81800-00 60X-81800-00 6C9-81800-00 6D0-81800-00	12V	1.4 kw 13 CCW		✔

250HP (2003-07)



MUELLE DE ARRANQUE — STEERING SPRING — MOLLA AVVIAMENTO — RESSORT DE LANCEUR

new

REF	OEM	2T STROKES	4T STROKES
PAF15-07130107	63V-15713-00	✔	✔

6 - 25 hp



new

REF	OEM	2T STROKES	4T STROKES
REC66T-15713-00	66T-15713-00 6F5-15713-00, 01	✔	✔

25 - 40 hp



TRINQUETE TRACCIÓN PLATO — PAWL, DRIVE — CRICCHETO TRAZIONE PIATO — ENTRAÎNEMENT

new

REF	OEM	2T STROKES	4T STROKES
PAF15-07130202	63V-15741-00	✔	✔

6 - 40 hp



REF	OEM
PAF15-07130203	63V-15767-00
PAF15-07130204	63V-15784-00



PAF15-07130203



PAF15-07130204

CABLE DE MOTOR DE ARRANQUE A BATERÍA — CONNECTION LINE, POWER — CAVO MOTORE DI AVVIAMENTO A BATTERIA — CABLE DE CONNEXION

new

REF	OEM
PAT85-05000023	6C5-82105-01 6H0-82105-02, J2

-60 hp



TIRADOR DE ARRANQUE | STARTER HANDLE ASSY | MANIGLIA AVVIAMENTO | POIGNEE DE LANCEUR

new

REF	OEM
PAF4-04130100	6G1-15755-00 6G1-15779-00



PLATO Y PLACA DE ARRANQUE MANUAL | PLATE & DRUM, DRIVE | PLACCA E PIATTO DI AVVIAMENTO MANUALE | TAMBOUR, POULIE

new

REF	OEM	2T STROKES	4T STROKES
PAF15-07130201	63V-15714-00	✔	✔
PAF15-07130001	63V-15716-00	✔	✔

6 - 20 hp



PAF15-07130201



PAF15-07130001

LLAVES DE ARRANQUE | IGNITION STARTER SWITCH | CHIAVI DI ACCENSIONE | CONTACTEUR A CLÉ

MONTAJE EN MANDO DE CONTROL | CONTROL BOX | MONTAGGIO NEL TELECOMANDO | MONTAGE POUR BOITIER DE COMMANDE

REF	OEM	2T STROKES	4T STROKES
PAF15-13000200W	703-82510-12	✔	✔



MONTAJE EN PANEL | DASH MOUNT | MONTAGGIO NEL PANNELLO | MONTAGE POUR TABLEAU DE BORD

REF	OEM	2T STROKES	4T STROKES
REC61B-82510-02	61B-82510-01	✔	



LLAVE DOBLE INSTALACIÓN | DUAL ENGINE APPLICATION | CHIAVE DOPPIA INSTALLAZIONE | POUR INSTALLATION DOUBLE

REF	OEM	2T STROKES	4T STROKES
REC6K1-82510-07	6K1-82510-06	✔	✔



LLAVE CON CHOQUE — PUSH T. CHOKE — CHIAVE CON CONTATTO — AVEC STARTER

REF	OEM	2T STROKES	4T STROKES
REC703-82510-44	703-82510-43	✔	✔



LLAVE PARA MANDO POPERO — KEY FOR STERN CONTROL — CHIAVE PER COMANDO A GUIDA — CONTACTEUR A CLÉ COMPLET

new

REF	OEM	2T STROKES	4T STROKES
REC6H3-82510-03	6H3-82510-00, 01, 02, 03	✔	✔

55B (1992-00)
E60H (1996-97)
75A (1992-95)
85A (1995)



SOLENOIDE RELÉ — SOLENOID RELAY — SOLENOIDE RELE — SOLENOIDE RELAIS

REF	OEM
PH375-0034	65W-81941-00

F20 (1998-09)
F25 (1998-09)
F30 (2001-09)
F40 (2000-09)



REF	OEM
REC688-81950-10	688-81950-10

50G 80A
50D 90A
E60 60F
70B



REF	OEM
REC61A-81941-00	61A-81941-00 6E5-81941-11

150 175
200 115
225 130
250 100HP



REF	OEM
REC89-825096T01	66G1-81941-10

6 - 90 HP



new

REF	OEM
REC89-825096T01	6E5-81950-01 6G1-81940-00



new

REF	OEM
PAF15-05170300W	6G1-81941-10



REF	OEM
PH375-0042	68V-8194A-00 68N-81940-00

F40 - F200 (2000-16)
Z / LZ / VZ200 (2004-07)
Z / LZ / VZ250 (2003-07)
Z / LZ / VZ300 (2004-07)



new

REF	OEM
REC68V-81950-00	68V-81950-00

20 - 300 HP



REF	OEM
REC61A-81950-01	61A-81950-00, 01

50 -250 hp (1990-16) 2 Strokes
F20, F25 (1998-09) 4 Strokes



new

REF	OEM
REC60E-81950-00	60E-81950-00

30 - 115 HP



new

REF	OEM
REC6AW-8194A-00	6AW-8194A-00

F30 / F40 (2009+)
F300 (2008-11)
F350 (2008+)



new

REF	OEM
REC6AW-81950-00	6AW-81950-00

F150C/G (2017+)
F1475C (2017+)
F200C/G (2013+)
F225C/F (2011+)
F250B/D/C (2009+)
F300A/B/C (2008+)
F350A/C/T (2008+)



REF	OEM
REC63P-81950-00	63P-81950-00

F20 - F300



new

REF	OEM	2T STROKES	4T STROKES
REC6H1-81950-01	6H1-81950-00, 01	✔	✔

30 / 40 / 45 / 50 / 60 HP (1995+)



new

REF	OEM	⚡
REC60V-81950-00	60V-81950-00	12V

Z250D,T,F (2003-07)
Z300A,T (2004-07)



REF	OEM
PH375-0047	6E5-81950-01

175HP (1991-96)
200HP (1991-10)
225HP (1996-09)
150HP (1996-03)
115HP (1995-13)
100HP (1996-01)
130HP (1991-07)



REF	OEM
PH375-0048	6E5-8195A-01 6E5-8195C-01

100	(1996-01)
115	(1991-13)
130	(1991-07)
150	(1998-07)
175	(1996-03)
200	(1991-10)
225	(1996-09)
F100 A/AET/TLR/TRZ	(1999-06)
F100 BET	(2003-12)
F100 CETL	(2003)
40X/E40MLH	(1998-03)
F80A/AET/TLR	(1999-06)



REGULADORES Y RECTIFICADORES — REGULATOR AND RECTIFIERS — REGOLATORI E RADDRIZATORI — REGULATEURS ET RECTIFIEURS

REF	OEM	2T STROKES	4T STROKES
REC6H2-81960-10	6H2-81960-10	✔	

40
50
60
70

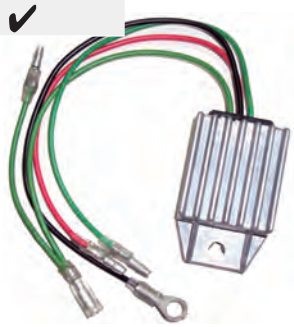

REF	OEM	2T STROKES	4T STROKES
REC67F-81960-12	67F-81960-00		✔

F75AETL (2003)
F80A,TLR,TJRA (1999-06)
F90AET,TRB,TLRB (2003)
F100A,TLR,BET,CET (1999-12)

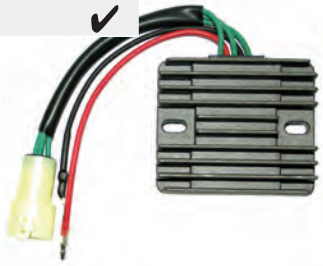

REF	OEM	2T STROKES	4T STROKES
REC6G5-81960-A0	6G5-81960-A0	✔	

75		(1988-96)
85		1989-96)
90		(1984-91)
115		(1991-96)
130		(1988-89)
150		(1984-89)
150		(1997)
175		(1984-89)
200		(1984-89)

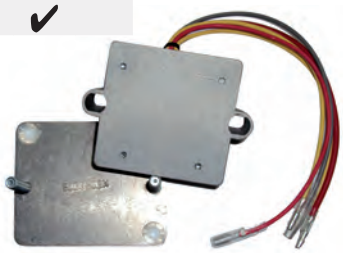

new

REF	OEM	2T STROKES	4T STROKES
PAT85-05030300	6AH-81960-00		✔

F9.9H (2009+)
F13.5B (2007-09)
F15C/E/M (2007+)
F20B/M (2007+)



new

REF	OEM	2T STROKES	4T STROKES
REC63P-81960-02	63P-81960-00, 01, 02		✔

F150A,T,B,D,F (2004+)



REF	OEM	2T STROKES	4T STROKES
REC6G1-81970-62	664-81970-60, 61, 62 676-81970-00 6E9-81970-70 6G1-81970-00, 60, 61, 62, A0	✔	

4 & 5 HP (1cyl)
6, 8, 9.9, 15, 20, 25, 30, 40 (2 cyl)
40, 50, 55, 60, 70 (3 cyl)



REF	OEM	2T STROKES	4T STROKES
REC6H0-81960-00	6H0-81960-00	✔	

75A, AEM, AEHD		693-6922	(1997-02)
85A, AE, AED, AEDL, AEDH, AEDX, AET, AETL, AETX		688-688F	(1997-15)
E115 A, AE, AEL, AMH, AMHL, AET, AETL, AETX		61U0-61UG	(2001-15)



new

REF	OEM	2T STROKES	4T STROKES
REC6R3-81960-10	6R3-81960-10	✔	

100A (1991)
115C (1990-13)
130B/T (1990-14)
150C/F/T (1990-13)
175B/D (1990-05)
200B/C (1991-93)
PROV200 (1991-94)
225B (1990-91)

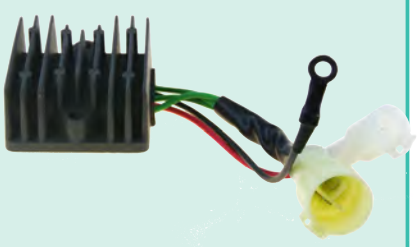

new

REF	OEM	2T STROKES	4T STROKES
REC6P2-81960-03	6P2-81960-02,03		✔

F200A/C (2006-15)
F225A/B/C (2007-15)
F250A/B/T (2006-13)



new

REF	OEM	2T STROKES	4T STROKES
REC61A-81960-04	61A-81960-00, 01, 02, 03, 04	✔	

225C/G (1994-03)
250A/B/E/G (1990-10)



new

REF	OEM	2T STROKES	4T STROKES
REC6G8-81960-A1	6G8-81960-A1		✔

F8B (1990-99)
FT9.9D (1999-08)
F9.9C/A/B/M (1990-08)
F13.5A (2005-07)
F15A/M/E/P (1998-07)

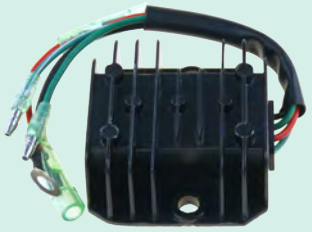

new

REF	OEM	2T STROKES	4T STROKES
PAF15-07060001	6J8-81960-00	✔	✔

6 - 50 HP

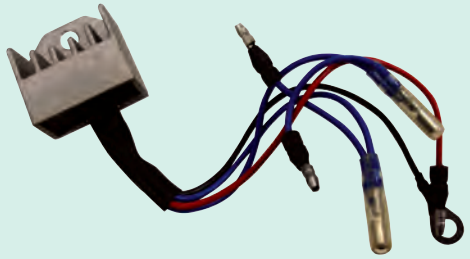

new

REF	OEM	2T STROKES	4T STROKES
REC881346T	68V-81960-00 6D3-81960-00		✔

T/FT/F50 (2005-06)
T/FT/F60C/D/T (2005-06)
F75B/T (2005)
F80B (2005-06)
F100D (2005-06)
F115A/T (2000-06)



new

REF	OEM	2T STROKES	4T STROKES
REC69J-81960-13	69J-81960-10, 11, 12, 13		✔

F200A/T (2003-07)
F225A/T (2003-07)



new

REF	OEM	2T STROKES	4T STROKES
REC60V-81960-05	60V-81960-00, 01, 02, 03, 04, 05	✔	

250D/F/T (2003-07)
300A/T (2004-07)

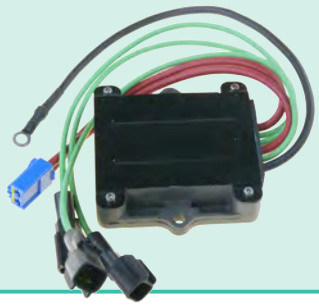



P. 32

CDI Y CAJAS NEGRAS — CDI & POWER PACK — CDI E CENTRALINA — CDI ET BOITIER ELECTRONIQUE

REF	OEM	2T STROKES	4T STROKES
REC688-85540-00	688-85540-00	✔	

E75 BMHD, BMHDL	6925 - 692Y	(2003-15)
75 A, AED, AEDL, AEM, AEHD, AET, AETL	692 -692Y	(1997-15)
75A	692E	(2008)
85, A, AE, AED, AEDL, AEDX, AEHD, AET, AETX	688 - 688F	(1997-15)
85A	6886 - 6887	(2007-08)



new

REF	OEM	2T STROKES	4T STROKES
REC6G9-85540-29	6G9-85540-29 6G9-85540-22 6G9-85540-21 6G9-85540-20		✔

F8B (1985-99)
F9.9B (1985-99)

2 CYL.



new

REF	OEM	2T STROKES	4T STROKES
PAF20-05000300	6AH-85540-00	✔	

F9.9H (2009+)
F13.5 B (2008-09)
F15C/E/M (2007+)
F20B/E/M (2007+)



new

REF	OEM	2T STROKES	4T STROKES
PAF15-07000500	66M-85540-10	✔	

F9.9C, M (2002-07)
F13.5 A (2002-07)
F155A,E,M,P (2002-07)

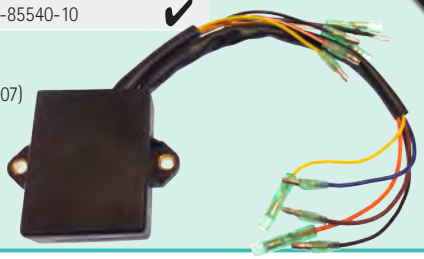

new

REF	OEM	2T STROKES	4T STROKES
REC6H3-85540-11	6H3-85540-10, 11, 12	✔	

3 cyl (1984+)
60F/E60H,E,M
70E,B



new

REF	OEM	2T STROKES	4T STROKES
REC63V-85540-00-01	63V-85540-00, 01, 02	✔	

9.9 - 15HP (1995+)
63V & 63W



new

REF	OEM	2T STROKES	4T STROKES
REC68T-85540-00	68T-85540-00	✔	

F6A/B/M (2001-05)
T/FT/F8C/M (2000+)
T/FT/F9.9F/M/J (2008+)



new

REF	OEM	2T STROKES	4T STROKES
REC63D-85540-04	63D-85540-00, 01, 02, 03, 04	✔	

3 cyl
C40 (1996-03)
40V,E,Y (1995+) C50 (2000)
50H (1995-03)



new

REF	OEM	2T STROKES	4T STROKES
REC6F6-85540-01	6F6-85540-01	✔	

E40G (2008-16)



new

REF	OEM	2T STROKES	4T STROKES
REC6H3-85540-13	6H3-85540-10, 11, 12, 13	✔	

60F (1984-91)
70B,E (1984-91)
E60H,E (2000+)

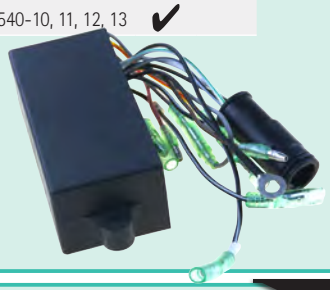

new

REF	OEM	2T STROKES	4T STROKES
REC6H2-85540-13	6H2-85540-10, 11, 12, 13	✔	

50G (1997-07)
60F,T (1997-10)
70B,T (1997-17)



new

REF	OEM	2T STROKES	4T STROKES
REC6A1-85540-01	6A1-85540-00, 01	✔	

2B,M,C (1995-10)



new

REF	OEM	2T STROKES	4T STROKES
REC6G9-85540-29	6G9-85540-20, 21, 22, 29	✔	

F8B (1985-99)
F9.9B, M, E (1985-06)



REF	OEM	2T STROKES	4T STROKES
REC63V-85540-00-01	63V-85540-00,01	✔	

9.9, 15HP	(1995-08)
13, 5HP	(2003-04)



REF	OEM	2T STROKES	4T STROKES
REC61N-85540-00	61N-85540-00	✔	

25	(1997-07)
30	(1996-08)
200	(1993)



REF	OEM	2T STROKES	4T STROKES
REC6G0-85540-11	6G0-85540-11	✔	

175	(1986-89)
200	(1986-89)
150	(1988)
225	(1987-89)



REF	OEM	2T STROKES	4T STROKES
REC6E0-85540-71	6E0-85540-71,70	✔	

4	(1984)
5	(1984)



REF	OEM	2T STROKES	4T STROKES
REC689-85540-21	689-85540-21,20	✔	

25	(1984-87)
30	(1984-87)
30	(1989-90)
40	(1990)



REF	OEM	2T STROKES	4T STROKES
REC696-85540-12	696-85540-12,11,10	✔	

6	(1984-99)
8	(1984-04)



REF	OEM	2T STROKES	4T STROKES
REC6F5-85540-22	6F5-85540-22	✔	

E40	(2003)



REF	OEM	2T STROKES	4T STROKES
REC695-85540-11	695-85540-11,12	✔	

E40	(2003)
9.9	1986-95)
15	(1986-95)
20	(1985-02)
25	(1985-02)



REF	OEM	2T STROKES	4T STROKES
REC663-85540-15	663-85540-11,15	✔	

55	(1990-93)



REF	OEM	2T STROKES	4T STROKES
REC6E5-85540-12	6E5-85540-12,11,10	✔	

115	(1984-89)
115	(1991-98)
130	(1988-89)

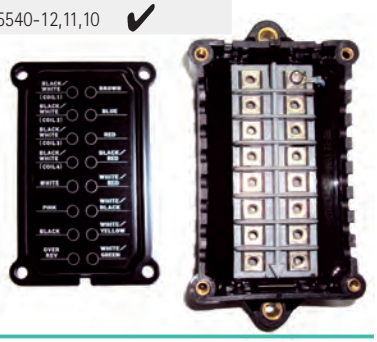

REF	OEM	2T STROKES	4T STROKES
REC6G5-85540-12	6G5-85540-12,11,10	✔	

150HP	(1984-89)

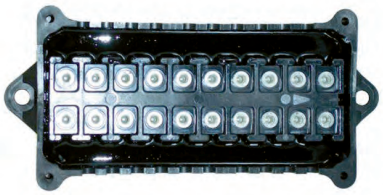

REF	OEM	2T STROKES	4T STROKES
REC66T-85540-00-01	66T-85540-01	✔	

40X/E40X	
MLH	
XW	(1998+)



REF	OEM	2T STROKES	4T STROKES
REC6B4-85540-01	6B4-85540-01	✔	

E9.9 DMH-5 (2003+)
E15 DMH -5 (2003+)



REF	OEM	2T STROKES	4T STROKES
REC688-85540-16	688-85540-16	✔	

75
85

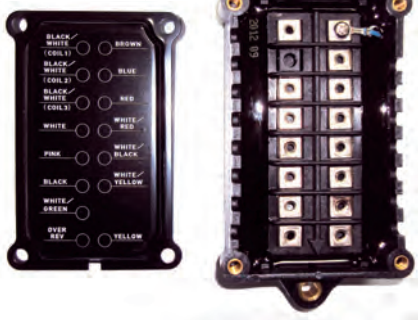

REF	OEM	2T STROKES	4T STROKES
REC6J8-85540-H2	6J8-85540-H2	✔	

25J/EO/SH (1999)
30D/ETOL/EOS/MHS
MHOL, E, L, H
(1999+)



DESCONECTORES DE SEGURIDAD — CUT OFF SWITCHES — CHIAVETTA DI SICUREZZA — COUPE CIRCUIT DE SECURITE

REF	OEM
REC688-82575-01	688-82575-01

9.9 --> 250 HP

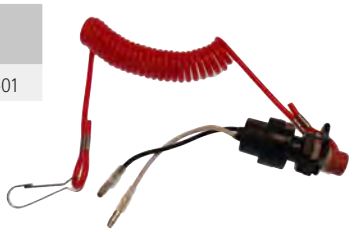

REF	OEM
REC6E9-82575-02	6E9-82575-00

E30/GE/BMH (1996-12)
25V/M/E/B (1996-10)
6/8C/TRV/MSH (1996-12)



REF	OEM
REC69W-82575-00	69W-82575-00



new

REF	OEM
PAF4-01090401	682-82556-00



REF	OEM
REC66T-82575-01	66T-82575-01

E40X
MLHZ
X
MH (2001+)



REF	OEM
REC65W-82575-01	65W-82575-01

F2.5
T-F 6-8
F9.9 -F15
9.9F-M
F13.5
F25 (2002+)



REF	OEM
REC6G8-81870-00	6G8-81870-00

F8A-B (1986-99)
F9.9A M,E,B (1985-99)
9.9F (1995-2000)
9.9-15-8-6/C-M-D (1984-2002)



REF	OEM
REC6A0-82550-01	6A0-82550-01

9.9D/15D (1985-93)
8N/JCEM (1984-96)
6CEM/6DEM (1984-96)



KITS
Interruptor de encendido para todo tipo de motores fueraborda o intraborda

REF KIT	CUERDA WIRE CORDA CORDON	
REC40970	REC40990	1

KITS
Emergency and stop switch for inboard or outboards.



KIT
Interruttore di accensione per tutti i tipi di motori fuoribordo o entrobordo.

REF KIT	CUERDA WIRE CORDA CORDON	
GS11290	GS11291	1

KITS
Coupe circuit de sécurité pour moteur inboard ou hors-bord



REF KIT	
GS11292	1



REF	
GS11294	1



STARTOR

REF	OEM	2T STROKES	4T STROKES
REC688-85510-10	688-85510-10 688-85510-11	✔	

75	(1988-96)
85	(1989-96)
90	(1984-90)



REF	OEM	2T STROKES	4T STROKES
REC6E5-85510-11	6E5-85510-11,10	✔	

115	(1984-89), (1991-98)
130	(1988-89)
150	(1984-89)



REF	OEM	2T STROKES	4T STROKES
REC688-85510-01	688-85510-00, 01	✔	

E75 BMHD, BMHDL (6925 - 692Y) (2003-15)
75 A, AED, AEDL, AEM, AEHD, AET, AETL (692 - 692Y) (1997-15)
75 A (692E) (2008)
85 A, AE, AED, AEDL, AEDX, AEHD, AET, AETX (688 - 688F) (1997-15)
85 A (6886 - 6887) (2007-08)



REF	OEM	2T STROKES	4T STROKES
PAF25-05140000	65W-85510-10		✔

F20	(1998-06)
F25	(1998-09)
T25/FT25	(2000-09)
F30	(2001-09)
F40	(2000-09)



REF	OEM	2T STROKES	4T STROKES
REC6G5-85510-11	6G5-85510-10	✔	

200 (1984-89)



new

REF	OEM	2T STROKES	4T STROKES
PAF20-05000200	6AH-85510-00		✔

F9.9 (2009+=
F13.5B (2007-09)
F15C,E,M (2007+)
F20B,M (2007+)



REF	OEM	2T STROKES	4T STROKES
REC6H1-85510-00	6H1-85510-00	✔	

80A
AE (1990-91)
90 AEO
AETO (1990-91)



YAMAHA

RECAMBIOS MARINOS

INSTALACIÓN ELÉCTRICA / WIRING HARNESS / INSTALLAZIONE ELETTRICA / INSTALLATION ELECTRIQUE

KIT CONVERSIÓN
Sustituye de 2 a 3 cables.

CONVERSION KIT
Converts 3-wire Tilt and Trim motors to 2-Wire design

KIT CONVERSIONE
Sustituisce da 2 a 3 cavi.

FAISCEAU CONVERTISSEUR 3 A 2 FILS

REF	OEM
PH200-WH01	



INTERRUPTOR POWER TRIM / POWER TRIM SWITCH / INTERRUTTORE POWER TRIM / INTERRUPTEUR DE TRIM

new

REF	OEM
REC6R3-82563-01	6R3-82563-00 6R3-82563-01

100 - 250 HP

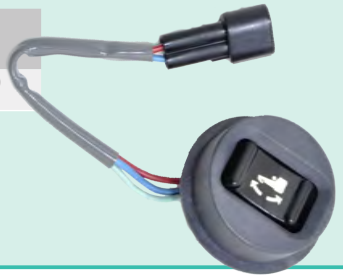

REF	OEM
PAE4-10040100W	703-82563-00, 01

Para mandos 703
For controls 703
Per comandi 703
Pour 703



TRIM COMPLETO BIDIRECCIONAL / COMPLETE TRIM ASSEMBLY / MOTORINO TRIM COMPLETO / MOTEUR DE TRIM

REF	OEM	⚡			2T STROKES	4T STROKES
REC67C-43880-01	67C-43880-00, 01	12V	4	2		✔

T25 / FT25 (68V0 - 68V9) (2001-09)
T25 / FT25 (6BL1 - 6BL8) (2009-15)
F30 (69H1 - 69H9) (2001-09)
F30 (6BT1 - 6BT8) (2009-15)
F40 (67C0 - 67C8) (2001-09)
F40 (6BG1 - 6BG8) (2009-15)



REF	OEM	⚡			2T STROKES	4T STROKES
PH200-T048	6H5-43880-00, 01, 02, 09	12V	4	2	✔	

40-50HP (1984-94)



REF	OEM	⚡			2T STROKES	4T STROKES
PH200-T029	6H1-43880-02	12V	3	2	✔	

40HP (1994)
50-90HP (1992-95)
70-90 (1996)
60-70-90 (1998)
90HP (1992-02)



REF	OEM	⚡			2T STROKES	4T STROKES
PH200-T036	62Y-43880-01, 02 69W-43880-00, 01 CS3-43880-00	12V	3	2	✔	✔

40Y (2005-07)
40V (2003)
C40 (2002)
F40 (2002)
F50
FT50 (2002-07)



REF	OEM	⚡			2T STROKES	4T STROKES
PH200-T035	62X-43880-00, 01, 09	12V	3	2	✔	✔

40V (1995-98)
F45 (1995- 99)
50H (1995-98)
F50 (1995-99)
FT50 (1996-00)



new

REF	OEM	⚡			2T STROKES	4T STROKES
PH200-T041	6H1-43880-00	12V	3	2	✔	

60F (1987-91)
70B (1987-91)
75A (1990-91)
80A (1987-91)
85A (1990-91)
90A (1987-91)



+ relés conversión | relay | rele | relais

REF	OEM	12V	4	2	2T STROKES	4T STROKES
PH200-T044	67F-43880-00	12V	4	2		✔

F75 (2003-04)
F80 (1999-05)
F90 (2003-04)
F100 (1999-05)



REF	OEM	12V	4	2	2T STROKES	4T STROKES
PAT40-10020500	65W-43880-00, 01		4	2		✔

F20AE, AET, DET (1998-15)
F25A, AET, AMH, AW, EH, ELH, MHA, DMH, DET (1998-15)
F45AET/F50TJR (1999)
25J, JEO, ESH (1999)
30D, DETO, DMH (1999-10)
40X/E40X (1998-03)



REF	OEM	12V	4	2	2T STROKES	4T STROKES
PH200-T068	6D8-43880-00, 01,09	12V	4	2		✔

F75
F80
F100

EJE CORTO
SHORT SHAFT
ASSE CORTO
AXE COURT



REF	OEM	12V	4	2	2T STROKES	4T STROKES
REC6D8-43880-09	6D8-43880-00, 09	12V	4	2		✔

F75TR,TLR,BET (2005)
F80AET,BET (2005-06)
F100AET,DET (2005-06)

EJE LARGO
LONG SHAFT
ASSE LUNGO
AXE LONG



REF	OEM	12V	3	2	2T STROKES	4T STROKES
PH200-T069	69J-43880-00, 01 60V-43880-00		3	2		

F200
F225 (2002+)
F250 (2005+)
Z300



new

REF	OEM	12V	2	2	2T STROKES	4T STROKES
REC6AW-43880-02	6AW-43880-00, 01, 02	12V	2	2		✔

F300A (2008-11)
F350A (2008+)



REF	OEM	12V	3	3	ø	2T STROKES	4T STROKES
PH200-T037	688-43880-11 6E5-43880-00, 01, 02	12V	3	3	68,3 mm	✔	

60
70
75
80
85
90
115
150
200HP

4 mm



REF	OEM	12V	3	2	2T STROKES	4T STROKES
PH200-T030	6G5-43880-00, 01, 02	12V	3	2	✔	

115-200 (1987-95)
225 (1990-94)



REF	OEM	12V	4	2	2T STROKES	4T STROKES
PH200-T057	6AE-43880-00, 01, 03, 04 68W-43880-03 67H-43880-00	12V	4	2		✔

225
250HP
115
225 (1997-02)



REF	OEM	12V	3	1	2T STROKES	4T STROKES
PH200-T045	6C5-43880-00, 01		3	1	✔	✔

F40 (2006-10)
F60 (2006-10)
F50 (2005-10)
FT60 (2006-10)
40-50HP (1985-92)



REF	OEM				2T STROKES	4T STROKES
PH200-T050	61A-43880-00, 01	12V	3	4	✔	

225
250HP



new

REF	OEM				2T STROKES	4T STROKES
REC63P-43880-22	63P-43880-10 63P-43880-11 63P-43880-12 63P-43880-22	12V	3	2		✔

F150A/B/C/D/F/G (2012+)
F175A,C (2018+)
F200B,C,F,G (2018+)



POWER TRIM COMPLETO — COMPLETE POWER TRIM ASSEMBLY

REF	OEM	2T STROKES	4T STROKES
REC18-6865	63P-43880-03-00 64E-43880-02-40 68V-43880-03-40	✔	✔

3 RAM
115-225HP

SHOWA SYSTEM



new

REF	OEM	2T STROKES	4T STROKES
REC63P-43800-20	63P-4380003, 04, 06, 07, 20 64E-43880-02-40 68V-43880-03-40	✔	✔

115-220 HP (2003+)
SHOWA SYSTEM



MOTORINO POWER TRIM COMPLETO — POWER TRIM COMPLET

new

REF	OEM	2T STROKES	4T STROKES
PAT40-10000000	65W-43800-02-4D 65W-43800-03-4D 65W-43800-21-4D 65W-43800-22-8D 65W-43800-23-8D 65W-43800-20-4D 65W-43800-01-4D 65W-43800-00-4D	✔	✔

F20 / F25
E40 / 40X
30D



new

REF	OEM	2T STROKES	4T STROKES
PAF60-06000000	6C5-43800-11, 12		✔

F40/ F50/ F60 (2016+)



new

REF	OEM	2T STROKES	4T STROKES
REC6H1-43800-17-8D	6H1-43800-17-8D 6H1-43800-16-4D 6H1-43800-15-4D 6H1-43800-13-4D 6H1-43800-14-4D	✔	

50 - 90 HP

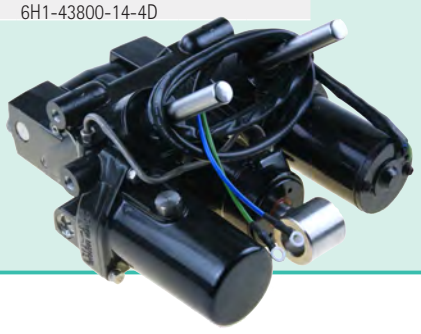

DESPIECE PISTÓN TRIM | PARTI PISTONE TRIM | PARTI PISTONE TRIM | PIECES VERIN DE TRIM

	REF	OEM					UN.
1	REC64E-43821-05	64E-43821-00	TORNILLO CILINDRO EXTREMO	SCREW	VITE	VIS	2
2	REC64E-43822-00	64E-43822-00	SELLO	SEAL OIL	PARAOLIO	JOINT TORIQUE	2
3	REC64E-4384J-00	64E-4384J-00	SELLO	SEAL OIL	PARAOLIO	JOINT TORIQUE	2
4	REC6G5-43864-00	6G5-43864-00	SELLO	SEAL OIL	PARAOLIO	JOINT TORIQUE	2
5	REC48630-96J03	64E-43821-08, 09, 00 64E-43820-08, 09, 00	TAPÓN PARA SHOWA SYSTEM	CAP FOR SHOWA SYSTEM	TAPPO PER SHOWA SYSTEM	NEZ DE VERIN DE TRIM POUR SHOWA SYSTEM	2

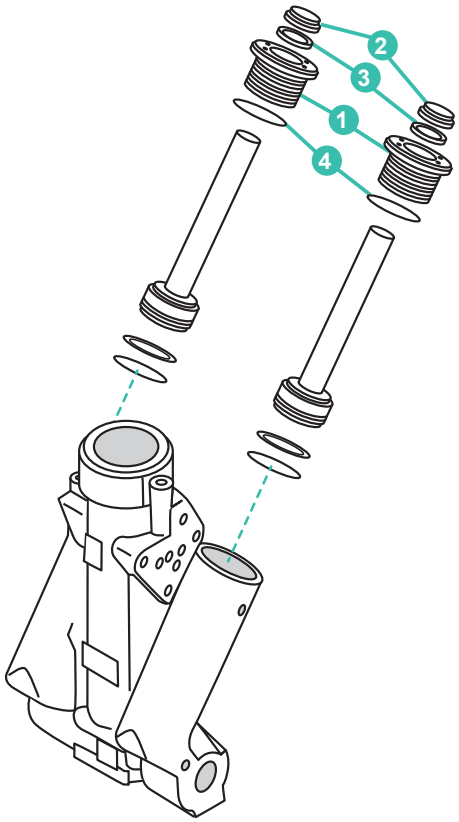

new

REF	OEM
REC48630-96J03	64E-43820-00, 08, 09 64E-43820-00, 08, 09

5 100 - 300 HP

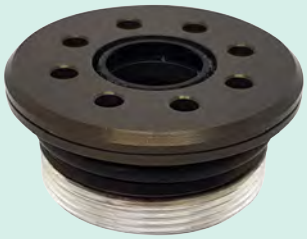

EXTRACTOR TAPONES DE TRIM | TRIM PLUGS EXTRACTOR | ESTRATTORE PER TAPPI DI TRIM | KIT EXTRACTEUR

new

REF	
RECTOOLTRIMKIT	RECTOOLTRIM1 + RECTOOLTRIM2 + RECTOOLTRIM 3



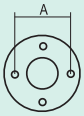

REF					A
RECTOOLTRIM1	1/2"	+ RECPIN4	+ RECPIN4.5		38 mm
RECTOOLTRIM2	1/2"	+ RECPIN4	+ RECPIN4.5		32 mm
RECTOOLTRIM3	1/2"	+ RECPIN6			35 mm



TRIM PISTON	TILT PISTON	
RECTOOLTRIM1		F25 - F40
RECTOOLTRIM2	RECTOOLTRIM3	F115 (2000-14)
RECTOOLTRIM2	RECTOOLTRIM3	F150 (2004-10)
RECTOOLTRIM2	RECTOOLTRIM1	F150 (2011+)
RECTOOLTRIM2	RECTOOLTRIM3	F175 - F200 (2.8L)
RECTOOLTRIM1	RECTOOLTRIM1	F200 - F250 (3.3L)
RECTOOLTRIM1	RECTOOLTRIM1	F225 - F300 (4.2L)
RECTOOLTRIM2	RECTOOLTRIM3	F350
RECTOOLTRIM2		F425
RECTOOLTRIM2		55-90 (2-Strokes) (1994+)
RECTOOLTRIM2	RECTOOLTRIM3	115-200 + VMAX
RECTOOLTRIM1	RECTOOLTRIM1	225 (2-Strokes)

KITS DE RECAMBIO
Los pines de repuesto no tienen garantía.

SPARE KITS
Replacement pins are not guaranteed.

KIT DI RICAMBIO
I perni di ricambio non sono garantiti.

KIT DE RECHANGE
Les pins de remplacement ne sont pas garanties

REF	
RECPIN4	3 PIN x 4 mm
RECPIN4.5	3 PIN x 4.5 mm
RECPIN6	3 PIN x 6 mm



SISTEMA DE GOBIERNO
STEERING SYSTEM
SISTEMA DI GUIDA
SYSTÈME DE DIRECTION

MANDOS DE CONTROL | ENGINE CONTROLS | COMANDI DI CONTROLLO | BOITIER DE COMMANDE

MANDO LATERAL | SIDE CONTROL | COMANDO LATERALE | BOITIER LATERAL

Mando a distancia de palanca con doble función (acelerador y cambio). Para motores intraborda e intra-fueraborda. Montaje lateral superpuesto. Utiliza cables 33-C.

Dual function, single lever control, For virtually all stern drive, outboard and inboard engines. Push button for neutral engine warm-up. For 33-C cables.

Comando a distanza di leve con doppia funzione accelleratore e cambio. Per motori entrobordo e entro-fuoribordo. Montaggio laterale sovrapposto. Utilizza cavi 33-C.

Boitier mono levier bi-fonction accélérateur et inverseur pour moteur inboard et hors-bord. Bouton poussoir pour se mettre au point mort. Utilise des câbles 33C.

REF	OEM
GS40015	YMD-RCBOX-00-10

GOLDENSHIP



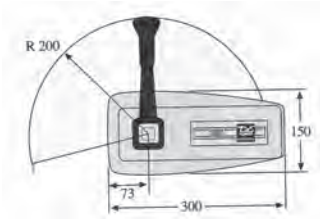

Conector de 7 pins. Sin PowerTrim
Mando a distancia de palanca con doble función (acelerador y cambio). Para motores fueraborda Yamaha y Parsun de 9,9 Electric a 30 Hp. Montaje lateral superpuesto. Leva para aceleración en punto muerto. Utiliza cables 33-C

Connector 7 pins. Without PowerTrim
Dual function, single lever control. For outboard engines Yamaha and Parsun 9,9 Electric to 30 Hp. Lever for neutral engine warm-up. For 33-C cables

Conettore da 7 pins. Sin PowerTrim
Comando a distanza di leve con doppia funzione accelleratore e cambio. Per motori fuoribordo Yamaha e Parsun da 9,9 Electric a 30 Hp. Montaggio laterale sovrapposto. Leva per accellerare in un punto morto. Utilizza cavi 33-C.

Connecteur 7 broches. Sans Trim.Boitier mono levier bi-fonction accélérateur et inverseur pour moteur hors-bord Yamaha et Parsun de 9.9 éléctrique à 30cv. Levier pour se mettre au point mort. Utilise des câbles 33C.

REF	OEM		2T STROKES	4T STROKES
REC703-48230-14	703-48230-10 703-48230-11 703-48230-12 703-48230-13 703-48230-14 703-48230-15 703-48230-16 703-48230-17 703-48230-18 703-48230-1A 703-48230-20 703-48230-21	9.9 - 70 HP (1986+)	✔	✔

RECmar®



Conector de 10 pins. Con PowerTrim
Mando a distancia de palanca con doble función (acelerador y cambio). Para motores fueraborda Yamaha y Parsun de 40 a 250 Hp. Montaje lateral superpuesto. Leva para aceleración en punto muerto. Con interruptor y cableado de Power Trim. Utiliza cables 33-C

Connector 10 pins. With PowerTrim
Dual function, single lever control, For outboard engines Yamaha and Parsun 40 to 250 Hp. Lever for neutral engine warm-up. With power trim switch and wires. For 33-C cables.

Conettore da 10 pins. Con PowerTrim
Comando a distanza di leva con doppia funzione, accelleratore e cambio.Per motori fuoribordo Yamaha e Parsun da 40 a 250 Hp. Montaggio laterale sovrapposto. Leva per accellerare in un punto morto. Con interruttore e cablaggio di Power Trim. Utilizza cavi 33-C.

Connecteur 10 broches. Avec Trim interrupteur et faisceau. Boitier mono levier bi-fonction accélérateur et inverseur pour moteur hors-bord Yamaha et Parsun de 40 à 250cv. Levier pour se mettre au point mort. Utilise des câbles 33C..

REF	OEM		2T STROKES	4T STROKES
REC703-48205-16	703-48205-10 703-48205-11 703-48205-12 703-48205-13 703-48205-14 703-48205-15 703-48205-16 703-48205-17 703-48205-18 703-48205-1A 703-48205-1B 703-48205-20 703-48205-21	8 - 300 HP (1984+)	✔	✔

RECmar®



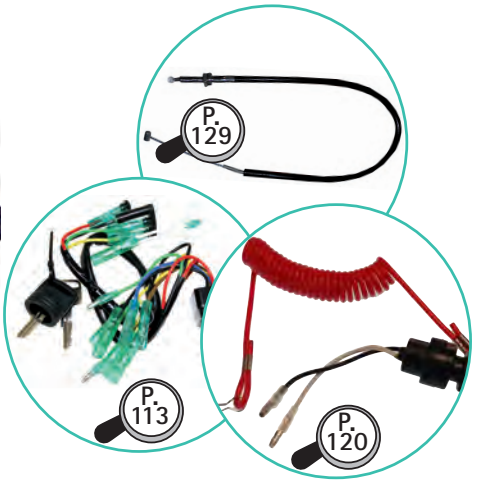

MANDO PARA CONSOLA | CONSOLE CONTROL | COMANDO PER CONSOLLA | BOITIER POUR CONSOLE

REF	YAMAHA 704	TRIM
REC704-48205-R0	704-48205-R0 704-48205-P1 704-48205-B1 704-48205-B0 704-48205-R0 704-48205-14 704-48205-11 704-48205-12 704-48205-13 704-48205-15 704-48205-P0	✔

RECmar®



new

REF	YAMAHA 704	TRIM
REC704-48207-R0	704-48207-R0 704-48207-P1 704-48207-39 704-48207-31 704-48207-30 704-48207-20 704-48207-21 704-48207-22	✔

RECmar®



CONECTORES DE CABLES | CABLE CONNECTOR | CAVO CONNETTORE | EMBOUT DE CABLE

REF	OEM
REC663-48344-00	663-48344-00

6>115HP

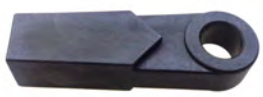

REF	OEM
PAF25-07000007W	703-48345-01

6>115HP



INTERRUPTORES PARA MANDOS | SWITCHS FOR ENGINE CONTROLS | INTERRUTTORI PER CONTROLLO | INTERRUPTEUR DE CONTRÔLE

INTERRUPTOR POWER TRIM (703) | POWER TRIM SWITCH (703) | INTERRUTTORE POWER TRIM (703) | COMMUTATEUR DE TRIM (703)

REF	OEM
PAE4-10040100W	703-82563-00 703-82563-01 703-82563-02

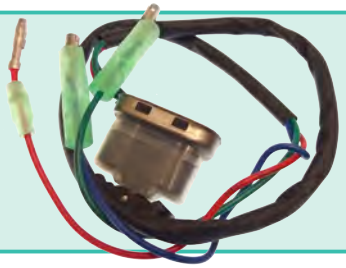

new

INTERRUPTOR PANEL SIMPLE (704) | SWITCH (704) | INTERRUTTORE PANELLO SIMPLE (704) | TABLEAU DE COMMANDE SIMPLE (704)

REF	OEM
REC704-82570-12	704-82570-12 704-82570-11 704-82570-10 704-82570-08 6E5-82570-05

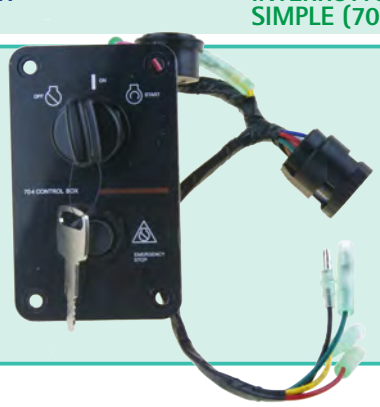

new

INTERRUPTOR PANEL COMPLETO O DOBLE ESTACIÓN | PANEL TWIN STATION | PANNELLO DOPPIA STAZIONE | BOITIER DE DEMARRAGE 2 MOTEURS

new

REF	OEM
REC6K1-82570-13	6K1-82570-13 6K1-82570-12 6K1-82570-11 6K1-82570-10 6K1-82570-08 6K1-82570-07 6K1-82570-06 6K1-82570-05 6K1-82570-04 6K1-82570-03 6K1-82570-02 6K1-82570-00

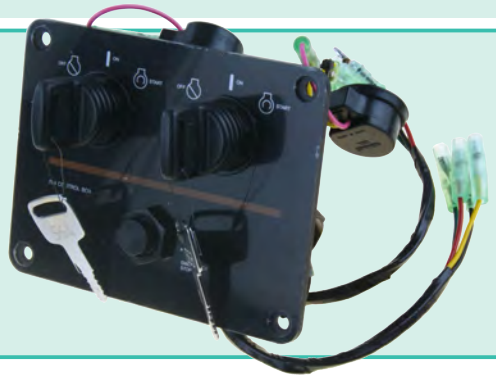

ARNÉS | ARNES | CAVI | FAISCEAU ELECTRIQUE

EXTENSIÓN DE ARNÉS (703/704) | ARNES EXTENSION (703/704) | ESTENSIONE (703/704) | RALLONGE FAISCEAU (703/704)

new

REF	OEM		PINS
REC688-8258A	688-8258A-10	2 m	10
REC688-8258A-30	688-8258A-30	3 m	10



ARNÉS COMPLETO (703) | ARNES ASSY (703) | CAVO CONTROLLO COMPLETO (703) | FAISCEAU ELECTRIQUE BOITIER CDE (703)

new

REF	OEM		PIN
PAF15-13000100W	688-82586-21	5 m	7
PAT85-08010100	688-8258A-20	5 m	10



PAF15-13000100W



PAT85-0801010

COMPONENTES (703) | COMPONENTS (703) | COMPONENTI (703) | COMPOSANT (703)

ESPACIADOR | PLATE CONTROL BOX | DISTANZIALE | PLAQUE BOITIER DE COMMANDE

new

REF	OEM
PAF15-11000002W	703-48293-10



PALANCA ACELERADOR | THROTTLE HANDLE INCHING | LEVA ACCELLERATORE | POIGNEE DE PAPILLON

new

REF	OEM
PAF15-13020007W	703-48152-00



PLACA CERRADURA SELECTOR — BLOCK CONTROL HANDLE — PLACCA SERRATURA SELETTORE — CALE POIGNEE DE CONTRÔLE

REF	OEM
PAF15-13010010W	703-48245-00

new



CABLE DE ACELERADOR — THROTTLE CABLE — CAVO ACCELERATORE — CÂBLE D'ACCELERATEUR

REF	OEM
REC6E0-26301-01	6E0-26301-01

4AC/A/AS
5C/CS/CMH



REF	OEM
REC6B4-26301-00	6B4-26301-00

E15D
E9.9D



REF	OEM
REC677-26301-02	677-26301-02

E8D
E8DMH



REF	OEM
REC61N-26311-00	61N-26311-00

25B/BM/V
30G/E30H



REF	OEM
REC6L2-26301-00	6L2-26301-00

9.9F/FM
13.5AM
15F/FM
20D/M
25N/NE/NW/D/M



REF	OEM
REC6F5-26311-00	6F5-26311-00

E40G/J
40G/J



REF	OEM
REC66T-26301-00	66T-26301-00

40X/E40X



new

REF	OEM
REC692-26301-03	692-26301-00, 01,02,03

55B (1992-00)
75A (1992-00)
85A (1995-98)
E75B (2003-16)
E48C (2003)
E60H (2001+)
E55C (2003-16)
F40J (2016+)

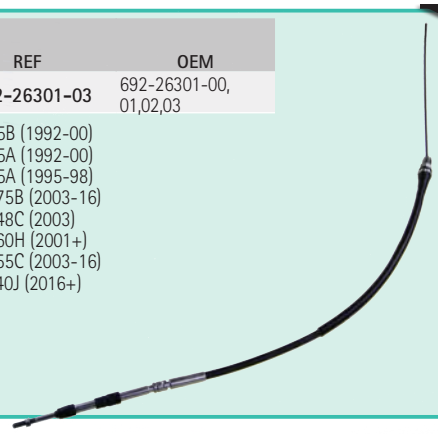

RUEDA ACELERACION — LEVER THROTTLE — RUOTA ACCELERAZIONE — ROUE D'ACCELERATEUR

REF	OEM
REC663-42138-00	663-42138-00

55B/BET
E55
E60
75A5
85AE



CABLES DE CONTROL — CONTROL CABLES — CAVI COMANDO — CÂBLES DE COMMANDE

Recorrido trabajo: 76 mm. Rosca 10-32" — Travel 3" Threaded 10-32" — Estensione 76 mm Filetto 10-32" — Course: 76 mm. Fil 10-32

maxflex

PRETECH Cable and Controls

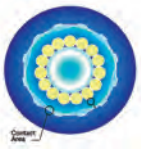



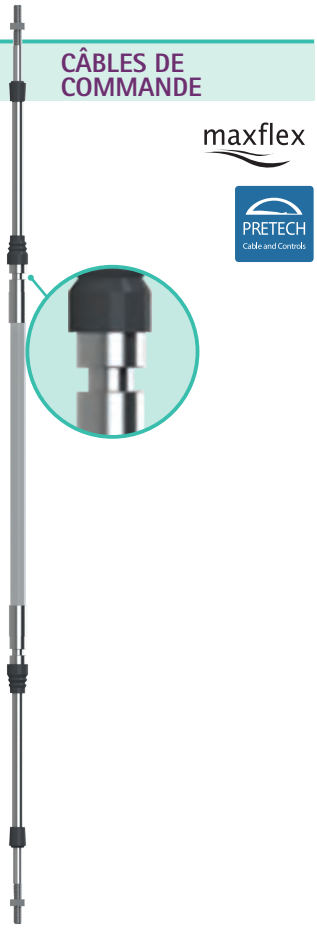

REF	RO	
PRE3300C05	YMM-21005-00-00	5' / 1,50 m
PRE3300C06	YMM-21006-C8-00	6' / 1,80 m
PRE3300C07	YMM-21007-C8-00	7' / 2,10 m
PRE3300C08	YMM-21008-C8-00	8' / 2,45 m
PRE3300C09	YMM-21009-C8-00	9' / 2,75 m
PRE3300C10	YMM-21010-C8-00	10' / 3,05 m
PRE3300C11	YMM-21011-C8-00	11' / 3,35 m
PRE3300C12	YMM-21012-C8-00	12' / 3,65 m
PRE3300C13	YMM-21013-C8-00	13' / 3,95 m
PRE3300C14	YMM-21014-C8-00	14' / 4,25 m
PRE3300C15	YMM-21015-C8-00	15' / 4,60 m
PRE3300C16	YMM-21016-C8-00	16' / 4,90 m
PRE3300C17	YMM-21017-C8-00	17' / 5,20 m
PRE3300C18	YMM-21018-C8-00	18' / 5,50 m
PRE3300C19	YMM-21019-C8-00	19' / 5,80 m
PRE3300C20	YMM-21020-C8-00	20' / 6,10 m
PRE3300C21	YMM-21021-C8-00	21' / 6,40 m
PRE3300C22	YMM-21022-C8-00	22' / 6,70 m
PRE3300C23	YMM-21023-C8-00	23' / 7,00 m
PRE3300C24	YMM-21024-C8-00	24' / 7,30 m
PRE3300C25	YMM-21025-C8-00	25' / 7,60 m
PRE3300C26	YMM-21026-C8-00	26' / 7,90 m
PRE3300C27	YMM-21027-C8-00	27' / 8,25 m
PRE3300C28	YMM-21028-C8-00	28' / 8,55 m
PRE3300C29	YMM-21029-C8-00	29' / 8,85 m
PRE3300C30	YMM-21030-C8-00	30' / 9,15 m

VARILLA DE ENLACE — LINK ROD ASSY — LEVA COLLEGAMENTO — BARRE D'ACCOUPLEMENT COMPLETE

REF	OEM
PAF25-07000300W	65W-61350-00

F20A
F25A
FT25B
F30A
F40B/C/D
F50F/H
F60A/C/F
FT50G/J
FT60B/D/G
F70A/40X



REF	OEM
GS41084	6E5-61301-00 6E5-61301-01

GOLDENSHIP



REF	OEM
PAF20-07000100W	63AH-61350-00

F15C
F20B



REF	OEM
PAF15-11020000W	63V-61350-00

9.9F
15F
F9.9C
FT9.9D
F15A



MANETA ACELERADOR — LEVER, THROTTLE — LEVA COLLEGAMENTO — LEVIER DE COMMANDE

new

REF	OEM
PAF4-01090100	6G1-42138-00,01 6EG-G2138-00



new

REF	OEM
PAF15-01030100	65W-42138-00



BRACKET

BRACKET ESTRIBOR | RIGHT BRACKET ASSY | BRACKET TRIBORDO | ETRIER DROIT

new

REF	OEM	2T STROKES	4T STROKES
PAF15-01010200	63V-43112-00-4D 63V-43112-01-4D 63V-W4311-00-4D 63V-W4311-03-4D 63V-WS431-B6-8D	✔	✔

9.9
13.5
15



BRACKET BABOR | LEFT BRACKET ASSY | BRACKET BABORDO | ETRIER GAUCHE

new

REF	OEM	2T STROKES	4T STROKES
PAF15-01010100	63V-43111-00-4D 63V-43111-01-4D 63V-43111-A2-4D	✔	✔

9.9
13.5
15



SOPORTE GIRATORIO | BRACKET, ROTARY | SUPPORTO GIRATORIO | SUPPORT TOURNANT

new

REF	OEM	2T STROKES	4T STROKES
PAF15-01010301S	63V-43311-00-4D 63V-43311-01-4D 99999-03116	✔	✔

9.9
13.5
15



SOPORTE BARRA DE DIRECCIÓN | BOLT, CLAMP BRACKET | SUPPORTO BARRA DIREZIONE | TUBE SUPPORT CABLE DE DIRECTION

new

REF	OEM	2T STROKES	4T STROKES
PAF15-01010001	63V-43131-00 63V-43131-10 63v-43131-01	✔	✔

9.9 - 60 Hp



TUERCA AUTOBLOCANTE | NUT, SELF-LOCKING | BULLONE AUTOBLOCCANTE | ECROU AUTO VERROUILLABLE

REF	OEM
PAF15-01010007	63V-43145-00 90185-22043 90185-22M11



RETÉN INFERIOR DEL BRACKET | BRACKET OIL SEAL | ANELLO BRACCETTO | JOINT INFERIEUR DU SUPPORT

new

REF	OEM	2T STROKES	4T STROKES
REC93109-44M00	93109-44M00		✔

40 HP



SOPORTE INFERIOR | SHELL, MOUNT DAMPER | SUPPORTO INFERIORE | SUPPORT SILENT BLOCK

new

REF	OEM
PAF15-00000001	66M-44551-00-4D 63V-45551-00-4D

9.9
13.5
15



VARILLA DE BASCULACIÓN | TILT ROD | ASTA BASCULANTE | BARRE DE TILT

new

REF	OEM
REC676-43160-02	676-43160-00 676-43160-01 676-43160-02

40 - 55 HP



REF	OEM
REC688-43160-01	688-43160-01

40 - 90 HP



CIRCLIP | CIRCLIP | CIRCLIP | CIRCLIP

new

REF	OEM
PAGB/T896-9	93430-10M00 99080-10600

6L5



CONECTOR | CONNECTOR | CONNETTORE | CONNECTEUR

new

REF	OEM
REC682-41237-00	682-42137-00
REC682-41237-50	682-41237-50
REC663-85518-00	633-85518-00

REC682-41237-00



REC682-41237-50



REC663-85518-00



EJE CONECTOR ACELERADOR | THROTTLE SHAFT CONNECTOR | ASSE CONNETTORE ACCELLERATORE | TIGE DE CONNEXION ACCELERATEUR

new

REF	OEM
REC688-41211-01	688-41211-00 688-41211-01



ENGRASADOR INOX 316 M6 | OILER M6 | INGRASSATORE | GRAISSEUR M6 INOX 316

new

REF	OEM
PAJB/T9740.1-M6	93700-06M03



BUJES BUSHINGS BOCCOLE BAGUES

REF	OEM
PAF15-01010302	90386-22M15
REC90386-25M31	90386-25M31
PAF15-01000004	90386-30048
PAF25-01000004	90386-44M03
PAF25-01000001	90386-52M02
REC90386-30M77	90386-30M77


PAF15-01010302


REC90386-25M31


PAF15-01000004


PAF25-01000004


PAF25-01000001



REC90386-30M77

new

REF	OEM	
REC90386-22M13	90386-22M13	NYLON
PAT85-01010203	90386-10M16	NYLON
PAF25-01010002	90386-22M15	NYLON
PAT85-01020005	90386-30M77	NYLON
PAT85-00000017	90386-18M35	NYLON
REC90386-18M63	90386-18M63	NYLON
REC90386-22M98	90386-22M98	NYLON
REC90381-20001	90381-20001	NYLON
REC90386-38M89	90386-38M89	NYLON
PAF15-01000001	65F-42537-00	NYLON
PAF25-03000007	90387-06M69	METAL


REC90386-22M13


PAT85-01010203


PAF25-01010002


PAT85-01020005

REC90386-18M63

REC90386-22M98


REC90381-20001


REC90386-38M89


PAT85-00000017

PAF15-01000001


PAF25-03000007

COLLAR WASHER, BELOW COLLARE CALLE

new

REF	OEM
PAF15-01000006	90386-30M60
PAT85-01020003	90386-30M78

PAF15-01000006

PAT85-01020003

MANDO ACELERADOR STEERING HANDLE ASSY MANIGLIA POIGNEE DE DIRECTION

REF	OEM
PAF4-01090300	68D-G2177-10 6EE-G2177-00


F4-F8



REF	OEM
REC6N0-G2177-00	6N0-G2177-00


F2.5
6C/T/M/D
8C/T/M



YAMAHA

RECAMBIOS MARINOS

EJE DE CAMBIO — HANDLE GEAR SHIFT ASSY

REF	OEM
REC688-44120-12	688-44120-11 688-44120-12

75AE/A
E75B
85A/AE



REF	OEM
REC688-44120-22	688-44120-22

85AE



LEVERAGGIO — COMMANDE D'INVERSION

REF	OEM
REC692-44120-22	692-44120-21 692-44120-22

75AE
80A
90A
90ETN



MANETAS Y FIJACIONES — STARTER HANDLE AND FIXINGS

REF	OEM
REC6L8-G3118-01	6L8-G3118-01

F4/F6/F-FT8/F6
6C/TRV/M/D
8C/M



REF	OEM
REC99999-02808	99999-02808



REF	OEM
REC6E0-43118-01	6E0-43118-00 6E0-43118-01



REF	OEM
REC663-43118-01-4D	663-43118-01-4D

F20/F25
40X/E40M/E40X/40Q
E8D/55B
E60H/E
E55C
E9.9D/E15D



MANIGLIE E CHIUSURE — POIGNEE LANCEUR ET DE SERRAGE

REF	OEM
REC648-44146-00	648-44146-00

25Q/D
30A
20C
40Q/H/E40G/J
50D



REF	OEM
REC689-15755-00	689-15755-00

9.9D/15D
25NE/20DM



REF	OEM
REC650-44147-00	650-44147-00

40Q
E40G/J
40G/J



SILENBLOCK

REF	OEM
REC63V-44514-01-CA	63V-44514-01-CA

9.9F/FM/MS
13.5AMH
15F/FM/MS



REF	OEM
REC670-44514-00	670-44514-00

55B
E55CMH



REF	OEM
REC670-44555-00-94	62Y-44555-00

E48CM
E55CM



REF	OEM
REC679-44514-00-94	679-44514-00-94

40QE/QWC/G/J
E40G/J



SILENBLOCK

REF	OEM
REC682-44514-01-94	682-44514-01-94

E9.9DMH
E15DMH





REF	OEM
REC688-44514-00	688-44514-00

E60HMHD
70BETO
75CETO
90AETO

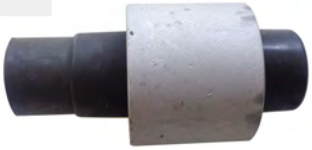

REF	OEM
REC688-44555-00	688-44555-00

60FE/FET
70CE/ETN
E75B
80A
85A



SILENBLOCK

REF	OEM
REC66T-44514-00-4D	66T-44514-00-4D

40X
E40X/M



SILENT BLOC

new

REF	OEM
PAF15-00000002	682-44555-30

6 HP
8 HP
9.9 HP
15 HP



new

REF	OEM
PAF15-00000003	66M-44557-00

9.9 HP
13.5 HP
15 HP



new

REF	OEM
PAF15-02010000	66M-44514-00-4D

9.9 HP
13.5 HP
15 HP



REF	OEM
REC663-44551-02-8D	663-44551-02-8D

F50DETL
75CETO
90AETO/TR/TRH



REF	OEM
REC676-44518-00	676-44518-00

E40G/J
40G/J
40G



YAMAHA

RECAMBIOS MARINOS

SISTEMA DE REFRIGERACIÓN
COOLING SYSTEM
SISTEMA DI RAFFREDDAMENTO
SYSTÈME DE REFROIDISSEMENT

LÍQUIDO INHIBIDOR DE LA CORROSIÓN

Diseñado especialmente para eliminar sedimentos de sal de cualquier superficie pintada, de metal, fibra de vidrio, vinilo, caucho, cristal o plástico. Es el método más eficaza para proteger los motores, los aparejos de pesca... Genera una capa de polímeros que evita futuras sedimentaciones.

SALT OFF

It is specifically formulated to quickly and effectively remove salt deposits from metal, fiberglass, plastic or painted surfaces.
It contains special polymers that bond to the treated surface to help prevent the formation of future deposits.

LIQUIDO INIBITORE DELLA CORROSIONE

Appositamente progettato per rimuovere depositi di sale da qualsiasi superficie verniciata, metallo, fibra di vetro, vinile, gomma, vetro o plastica. È il metodo più efficace per proteggere motori, attrezzi da pesca ... Genera uno strato di polimeri che impedisce la futura sedimentazione.

SALT OFF

La protection SALT OFF est formulé pour éliminer les dépôts de sel sur toutes les surfaces marines. Utilisable pour le rinçage des moteurs hors bord et inboard et les embases. Il laisse un film de protection spécial pour prévenir des attaques futures du sel.

new



REF
STA94100

Star brite





STA93900



STA93932



STA93922

REF	
STA93900	3,78 L
STA93922	650 ml
STA93932	1 L

TERMOSTATO — THERMOSTAT — TERMOSTATO — THERMOSTAT

TERMOSTATO — THERMOSTAT — TERMOSTATO — THERMOSTAT

new

REF	OEM	°C
REC6DA-12411-01	6DA-12411-01	60°



new

REF	OEM	°C
REC6FM-12411-00	6FM-12411-00	60°



REF	OEM	°C
REC6AH-12411-00	69M-12411-01 69M-12411-00 6AH-12411-00	60°



REF	OEM	°C
REC6E5-12411-02	6E5-12411-00 6E5-12411-01 6E5-12411-02	50



REF	OEM	ºC
REC6D9-12411-00	6D9-12411-00	55º



REF	OEM	ºC
REC6E5-12411-30	6E5-12411-30 6E5-12411-20 6E5-12411-10	50º



REF	OEM	ºC
REC6CE-12411-00	6CE-12411-00	52º



REF	OEM	ºC
PAF15-07000031	66M-12411-00 66M-12411-01	60º



REF	OEM	ºC
REC6AW-12411-00	6AW-12411-00	60º



REF	OEM	ºC
REC6H3-12411-10	6H3-12411-00 6H3-12411-01 6H3-12411-10 6H3-12411-11	60º



REF	OEM	ºC
REC6FP-12411-00	6FP-12411-00	60º



REF	OEM	ºC
REC67F-12411-01	67F-12411-00 67F-12411-01	60º



REF	OEM	ºC
REC6F5-12411-03	6F5-12411-00 6F5-12411-01 6F5-12411-02 6F5-12411-03	60º



REF	OEM	ºC
REC60V-12411-00	60V-12411-00	50º



GUÍA TERMOSTATO — THERMOSTAT GUIDE — GUIDA TERMOSTATO — GUIDE DES THERMOSTATS

	REF
3A/ 4A/ 5C/ 6C/ 8C/ 25N (-1993)/ 25NWO	REC6E5-12411-02
9.9F/ 15F/ 25N(1994+)/30D/ 40V/ 75C/ 90A/ 100A/ 115C/ 130B/ 150F/ 175D/ 200F/G/ 225D/G/ 250A/B/ Z150P/Q/ Z175G/ Z200N/P	REC6E5-12411-30
F2.5A/ F9.9H/ F13,5B/ F15C/ F20B,M	REC6AH-12411-00
9.9D/ 15D/ 20C/ 25D/ 40Q/ 55B	REC6F5-12411-03
F15C/F20D	REC6AH-12411-00
F25G	REC6FM-12411-00
50G/ 60F/ 70B	REC6H3-12411-10
F4A/B/ F5A/ F6A/C/ F8B/C/ FT8D/ F9.9B/C/F/J/ FT9.9A/D/G/L/ F15A/ F25A/D/ FT25B/F/ F30A/B/ F40A/B/F/ F50A/F/H/ FT-50B/C/G/J/ F60A/C/F/ FT60B/D/G/ F70A/ F80A/ F100A(2000-)	PAF15-07000031

	REF
F80A/B/ F100A(01+)/ F100B/ F(L)150A/ F(L)200A/C/ F(L)225A/B/C/ F(L)250A/B	REC67F-12411-01
F100D	REC6D9-12411-00
F100F	REC6FP-12411-00
F(L)225F/ F(L)250D/ F(L)300B	REC6CE-12411-00
F(L)200F/ F(L)200G/ F175A	REC6DA-12411-01
F(L)300A/ F(L)350A	REC6AW-12411-00
F100B/ F(L)115A/ (L)Z250D/F/ Z300A	REC60V-12411-00

JUNTAS TERMOSTATO | THERMOSTATO GASKETS | GUARNIZIONI TERMOSTATO | JOINTS DE THERMOSTAT

new

REF	OEM
REC63P-12414-00	63P-12414-00

F150A/B/D/F/T (2004+)

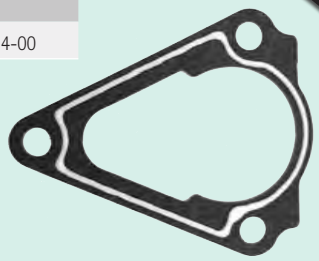

new

REF	OEM
PAF20-05000702	6AH-12414-00

F9.9 -F20 (New models)



REF	OEM
PAF4-04000011	68D-E2414-A0

F2.5
F4
F5
F6



REF	OEM
REC655-12414-A1	655-12414-A1

20C/CM
E25A
E25BMH
25VE/VM/DE/D/B/BMH/BWH/HMH
30G/GE/A
E30HMH
30HMH/HWH/HWL



REF	OEM
REC6G8-12414-A0	6G8-12414-A0

T8/T9.9
F6/8/9.9
FT8/9.9



REF	OEM
REC676-12414-A0	676-12414-A1

40X/E40X/E40MLH



REF	OEM
PAF15-07010022	62Y-12414-00
REC6H3-12414-A1	6H3-12414-A1

F9.9
F60
F30
F13.5
F70
FT9.9
T9.9TLR
FT25
FT50
FT60
F15/20/25/40/45/50
T50TLR
T60TLR
T25TLR



REF	OEM
REC6E9-12414-A1	6E9-12414-A1

40QE/QM/QEZ/QWC/GWH/JWH
E40GMH/JMH



REF	OEM
REC682-12414-A1	682-12414-A1

9.9D/F/FMH/FEMH/MH/MSH
15D
E9.9DMH
13.5AMH
15F/FEMH/FMH/MSH/MH
E15DMH



REF	OEM
REC663-12414-00	663-12414-A0

E48CMHS
55B/BET/BE/BM
E55CMH



REF	OEM
REC61A-12414-A0	61A-12414-A0

20DM/MSH
25J/JETO/NEM/NWC/D/DM
30D/DMH
40V/VMH/VEO
C40MLH/T
50H/HM
225C/CET/FETO/G
250AET/B/TXR/G/GETO



REF	OEM
REC688-12414-A1	688-12414-A1

75CETO/AE
E75B
80AE/A
85AE/A
90AE/TLR
100A/TLR
115BE/B
115A/AETO/CET
130BETO/TLR
150F/TXRA/FETO/C
Z150
175D/DETO/DETO
Z175
225D/DETO
VZ200
Z200
200AET/CETO/F/
FETO/G/GETO



CUBIERTAS TERMOSTATO | THERMOSTATO COVER | COPERCHIO TERMOSTATO | COUVERCLE DE THERMOSTAT

new

REF	OEM	
REC6E9-12413-00-1S	6E9-12413-00-1S	REC6E9-12414-A1

E40/40J (2003+)



new

REF	OEM	
REC688-12413-00-1S	688-12413-00-1S	REC688-12414-A1



new

REF	OEM	
REC682-12413-00-1S	682-12413-00-1S 682-12413-00-9M	REC682-12414-A1

E40/40J (2003+)



VÁLVULA ANTIPRESIÓN DE TERMOSTATO | THERMOTAT, PRESSURE VALVE | VALVOLA ANTI-PRESSIONE DE TERMOSTATO | SOUPAPE DE PRESSION DE THERMOSTAT

new

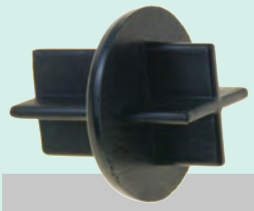

REF	OEM
REC688-12416-00	688-12416-00



O-RING	OEM
REC90480-20M05	90480-20M05

RESORTE | SPRING | MOLLA | RESSORT

new

REF	OEM
REC90501-16M11	90501-16M11

75 / 85 / 90A

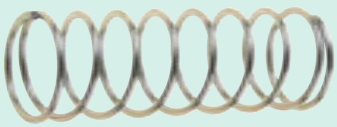

NIPLE | NIPPLE | NIPLE | TETINE

new

REF	OEM
PAF15-05000009	6H3-44391-00 6H3-44391-01 6BL-44391-00



JUNTAS TAPA DE REFRIGERACIÓN — GASKET, EXHAUST INNER COVER

REF	OEM
REC6E0-41114-A1	6E0-41114-A1

4AC/AS/MSH
5C/CS

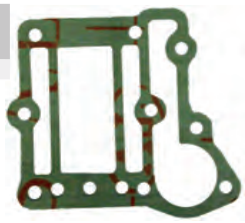

REF	OEM
REC6E0-41112-A1	6E0-41112-A1

4AC/AS/MSH
5C/CS

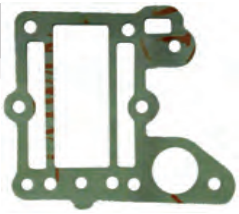

REF	OEM
REC6G1-41112-A1	6G1-41112-A1

6C/T/M/D
8C/M/T

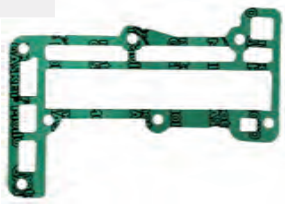

REF	OEM
REC6G1-41114-A0	6G1-41114-A0

6C/T/M/D
8C/M/T

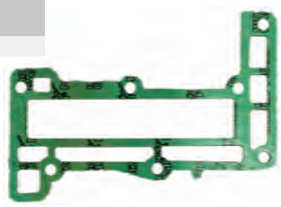

REF	OEM
REC6G1-11193-A1	6G1-11193-A1

6C/M/T/D
8C/M/T



REF	OEM
REC6G8-41112-02	6G8-41112-02

F8B
F9.9A/B
T9.9E



REF	OEM
REC6G8-41114-00	6G8-41114-00

F8B
F9.9A/B
T9.9E



GUARNIZIONE COPERCHIO REFRIGERAZIONE — JOINT DE PLAQUE DE REFROIDISSEMENT

REF	OEM
REC677-41112-A0	677-41114-A0

E8D/DMH



new

REF	OEM
REC6B4-11193-A0	6B4-11193-A0

E9.9 / E15 (2003+)

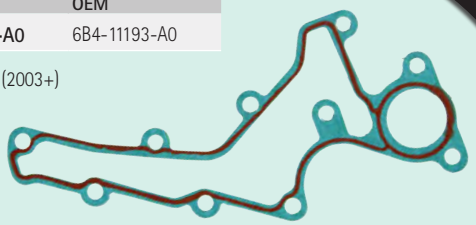

REF	OEM
REC682-41114-00	682-41114-A1

9.9D
15D



REF	OEM
REC682-41112-00	682-41112-A1

9.9D
15D



REF	OEM
PAF15-07010018	66M-41114-01

F9.9
13.5
F15



REF	OEM
REC63V-41112-A0	63V-41112-A0

9.9F/MSH/MH
13.5AW
15F/MSH/MH
E15DMH



REF	OEM
REC664-41114-A0	664-41114-A0

20C/25D

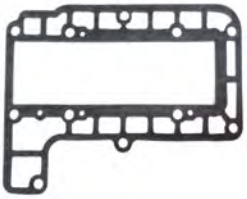

REF	OEM
REC6L2-41114-A1	6L2-41114-A1

20D/M
25N/M/D

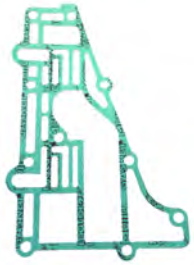

REF	OEM
REC6L2-41112-A3	6L2-41112-A2

20D/M
25N/M



REF	OEM
PAF25-05010111	65W-41114-00

F20/25
T25

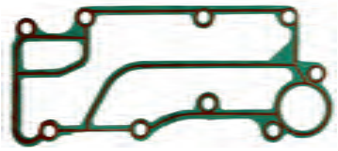

REF	OEM
REC6H3-41112-A0	6H3-41112-A0

25B
50G/GE
60FE/TLR
E60H
70B/BE/TR

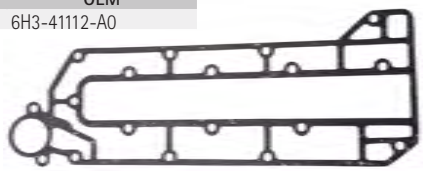

REF	OEM
REC6H3-41114-A0	6H3-41114-A0

25B
50G/GE
60FE/TLR
E60H
70B/BE/TR

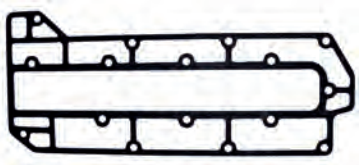

REF	OEM
REC6H4-41112-A0	6H4-41112-A0

25QEO
40H/V/VE/TLR
C40M/T
50H/DE



REF	OEM
REC6H4-41114-A0	6H4-41114-A0

25QEO
40H/V/VE/TLR
C40M/T
50H/DE

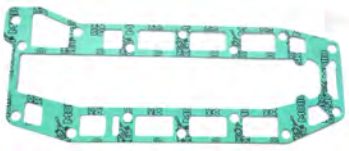

REF	OEM
REC6K8-41122-A1	6K8-41122-A1

25VE/M/B/BMH
E25A
30HM/HW/G/GE
E30HMH

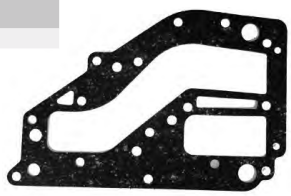

REF	OEM
REC6K8-41124-A1	6K8-41124-A1

25VE/M/B/BMH
E25A
30HM/HW/G/GE
E30HMH

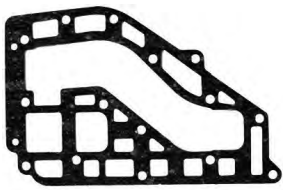

REF	OEM
REC689-41112-A0	689-41112-A0

30A

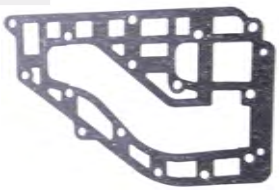

REF	OEM
REC689-41114-A0	689-41114-A0

30A



REF	OEM
REC67C-41114-00	67C-41114-00

F30/40

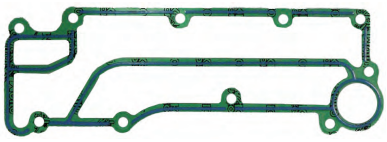

REF	OEM
REC66T-41114-A0	66T-41114-A0

40X
E40X

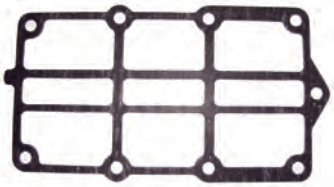

REF	OEM
REC6F5-41112-A0	6F5-41112-A0

40GWH/JMH
E40GMH



REF	OEM
REC6F5-41114-A0	6F5-41114-A0

40GWH/JMH
E40GMH

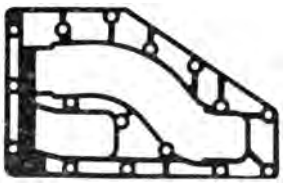

REF	OEM
REC6E5-41112-A1	6E5-41112-A1

100A/AET/TLR
115B/BE/TLR/CEO/TXR
130BET/TLR



REF	OEM
REC6E9-41114-A0	6E9-41114-A0

40Q

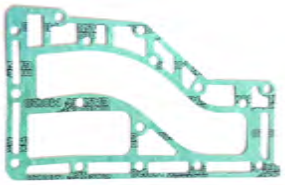

REF	OEM
REC6G5-11382-A1	6G5-11382-A1

115HP-250HP



REF	OEM
REC676-41112-A0	676-41112-A0

40Q

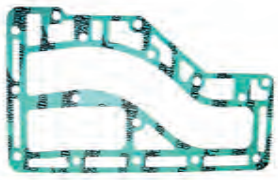

REF	OEM
REC6G5-41112-A1	6G5-41112-A1

150F/FE/TXR/GE/A-CE,
175D/DE/FE
200AET/F/FE/TLR/G/GE/BE
225D/DE/BE



REF	OEM
REC663-41114-00	663-41114-A0

55B
E55CMH



REF	OEM
REC68F-41114-00	68F-41114-00

Z150
175
200HP

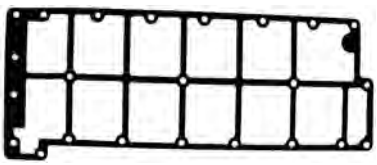

REF	OEM
REC688-41112-A0	688-41112-A0

75CET/TLR/AE
E75B
80AE
85A/AE
90A/AE/TLR

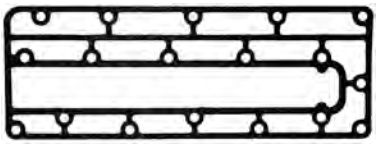

REF	OEM
REC6G5-41114-A0	6G5-41114-A0

150F/FE/TXR/GE/A-CE,
175D/DE/FE
200AET/F/FE/TLR/G/GE/BE
225D/DE/BE

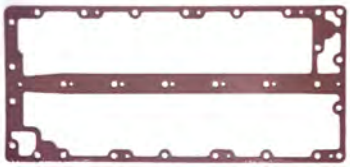

REF	OEM
REC688-41114-A0	688-41114-A0

75CET/TLR/AE
E75B
80AE
85A/AE
90A/AE/TLR

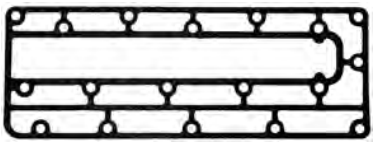

GUÍA DE IMPULSORES — IMPELLER GUIDE — GUIDA GIRANTE — GUIDE TURBINES

	REF	OEM	CEF	A	B	C
2A/B/C	**REC646-44352-01**	646-44352-01	CEF500324	11,5	47,5	13,7
F2.5, 3A, MALTA	**REC6L5-44352-00**	6L5-44352-00	CEF500322	10	36	14,5
4A/B, F4A, F4B, F5A, F6C, 5C	**REC6E0-44352-00**	6E0-44352-00	CEF500325	11	40	12,6
F6A/B, F8C, F9.9F, F9.9J	**REC68T-44352-00**	68T-44352-00	CEF500368	11,6	53	14
E8D	**REC662-44352-01**	662-44352-01	CEF500321	14	40	22
6C/D, 8C	**REC6G1-44352-00**	6G1-44352-00	CEF500302	11,9	40	18
F8, F9.9A/B/D, FT9.9A, 15D/9.9D	**REC682-44352-01**	682-44352-03	CEF500320	13	40	22
FT8D, 9.9F, F9.9C, FT9.9D, 15F, F15A-C, F20B, FT9.9G/L	**REC63V-44352-01**	63V-44352-01	CEF500363	12,85	53	14
20C, 25D, 30A	**REC689-44352-02**	689-44352-02	CEF500326	16,5	69,5	12,72
20D, 25N	**REC6L2-44352-00**	6L2-44352-00	CEF500384	13,97	51,2	19,05
F20A, F25A/D/G, FT25B, 25B/J/V, F30A, 30D/H/G, F40B/F, 40H/X, 50D	**REC6H4-44352-02**	6H4-44352-02	CEF500385G	16,1	51,2	19,05
F40A/C, 40V/F/Y, F45A, 50G/H, 55B, PRO50, F50A/B/F, FT50B/C/G, F50H, FT50J, F60A/C/F, FT60B/D/G, 60F, 70B, F70A	**REC6H3-44352-00**	6H3-44352-00	CEF500316	18,05	51,8	19
40Q	**REC6F5-44352-00**	6F5-44352-00	CEF500352	16,04	69,8	22,1
60F´04-, 70B´04-, 75A/C, PRO75, 80A, 85A, 90A	**REC688-44352-03**	688-44352-03	CEF500323	20,1	58	30
F80A/B, F100A/D	**REC67F-44352-00**	67F-44352-00	CEF500364	20	58,2	34,7
F(L)115A/F(L), 150A, V4/V6, F100F, F175, 200F/G	**REC6E5-44352-01**	6E5-44352-01	CEF500371	22,4	89	31
F(L)225F, F(L) 250D, F(L)300B	**REC6CE-44352-00**	6CE-44352-00	CEF500401N	22,5	90	36
F300, F350	**REC6AW-44352-00**	6AW-44352-00	CEF500389N	24,6	89	36

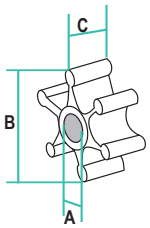


REC646-44352-01


REC6L5-44352-00


REC6E0-44352-00


REC68T-44352-00


REC662-44352-01


REC6G1-44352-00


REC682-44352-01


REC63V-44352-01


REC689-44352-02


REC6L2-44352-00


REC6H4-44352-02


REC6H3-44352-00


REC6F5-44352-00


REC688-44352-03


REC67F-44352-00


REC6E5-44352-01


REC6CE-44352-00


REC6AW-44352-00

KITS DE JUNTAS GASKETS KIT KIT GUARNIZIONE KITS JOINTS

REF	OEM
REC6A1-W0001-22	6A1-W0001-22

2B



REF	OEM
REC6A1-W0001-23	6A1-W0001-23

2B
2MSH



REF	OEM
REC6E0-W0001-C1	6E0-W0001-C1

F4/F5/F6
4AC
MSH
5C/CS/CMH



REF	OEM
REC6G1-W0001-C1	6G1-W0001-C0

6C/CMH/MSH/TRV/D/DMH
8C/MSH/CMH/TRV



REF	OEM
REC68T-W0001-20	68T-W0001-20

F6/F8/F9.9



REF	OEM
REC6G9-W0001-C4	6G9-W0001-C4

F8
F9.9



REF	OEM
REC69G-W0001-20	69G-W0001-20

FT8/T8
FT9.9/T9.9



REF	OEM
REC6G9-W0001-C6	6G9-W0001-C6

F8
F9.9



REF	OEM
REC66M-W0001-20	66M-W0001-20

F9.9
F13.5
F15



REF	OEM
REC683-W0001-21	683-W0001-C1

9.9D/15D

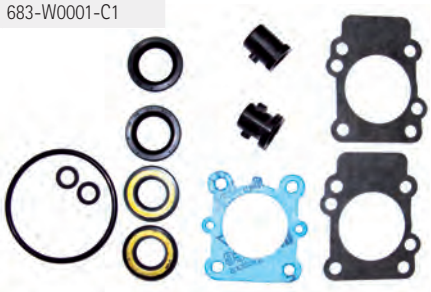

REF	OEM
REC63V-W0001-21	63V-W0001-21

9.9/15F
13.5AWH



REF	OEM
REC689-W0001-C2	6689-W0001-C2

20C/CM
25D
30A

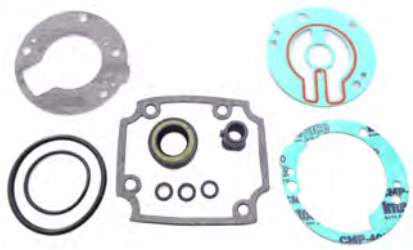

REF	OEM
REC6L2-W0001-C3	6L2-W0001-C3

25D/NWC/MLH/MSH



REF	OEM
REC689-W0001-21	689-W0001-21

55B



REF	OEM
REC61N-W0001-E1	61N-W0001-E1

25V/VM/E25A
30G/GE

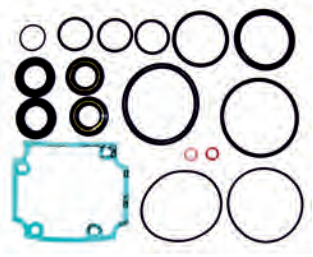

REF	OEM
REC698-W0001-21	698-W0001-21

E48
E48CMH
55B/BM/BET
E55CMH



REF	OEM
REC6J8-W0001-21	6J8-W0001-21

25J
30D/DMH

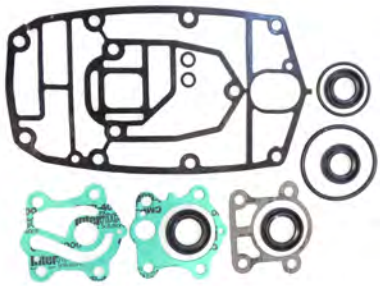

REF	OEM
REC689-W0001-20	689-W0001-20

55BET



REF	OEM
REC6H3-W0001-22	6H3-W0001-22

25B/BETO
50G/GEO/GETO
60FETO/FEDO/FEO/F/TLR
70B/BETO/BEMO



REF	OEM
REC65W-W0001-20	65W-W0001-20

F20/25



REF	OEM
REC67F-W0001-20	67F-W0001-20

F100A/T
F80A/T

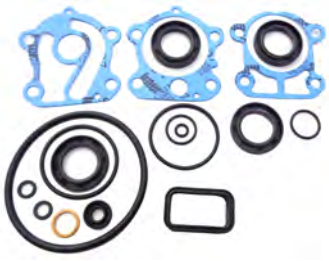

REF	OEM
REC62Y-W0001-22	62Y-W0001-20,-21,-22

F40A, ELH/F45AE, AET/F50A, AET, AED, AEDH, AEHT, TJR, TJRB, TLR, TLRA, TLRC, TLRZ, TLHC/FT50B/T50TLR (2000-07)



REF	OEM
REC64J-W0001-21	64J-W0001-21

FT50, T50



REF	OEM
REC6F5-W0001-C0	6F5-W0001-C0

40G/E40G



REF	OEM
REC69D-W0001-20	69D-W0001-20

E60H

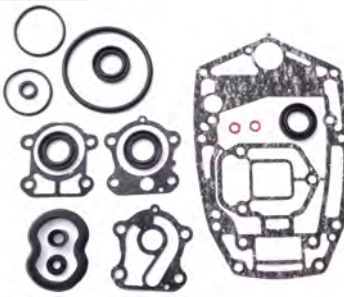

REF	OEM
REC66T-W0001-20	66T-W0001-20

40X/E40X-MH/XW
E40MCH



REF	OEM
REC6H2-W0001-20	6H2-W0001-20

60FETO/TR
70BETO/TR

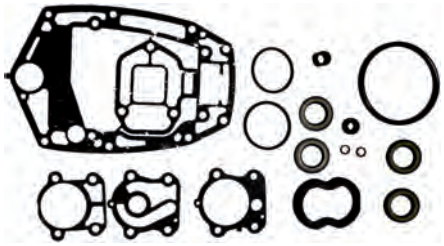

REF	OEM
REC6A0-W0001-21	6A0-W0001-21

40QE/G



REF	OEM
REC688-W0001-22	688-W0001-22

75CETO/E75B/AED
85A/AED/AET
90AETO/TR



REF	OEM
REC64J-W0001-20	64J-W0001-20

F45/50
FT50
T50



REF	OEM
REC688-W0001-20	688-W0001-20

75A/AE
80A
85A/AE
90A/AEO/AETO/ETN



REF	OEM
REC68V-W0001-20	68V-W0001-20

F115



REF	OEM
REC69J-W0001-20-00	69J-W0001-20

F200/225



REF	OEM
REC6E5-W0001-F1	6E5-W0001-F1 6E5-W0001-21 6F3-W0001-21

115BETO/B/CEO/CETO/TXR
130BETO
E115AE

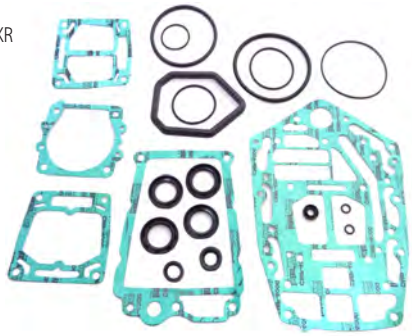

BOMBA DE AGUA WATER PUMP POMPA ACQUA POMPE D'EAU

CUERPO BOMBA DE AGUA HOUSING, WATER PUMP CORPO, POMPA ACQUA CORPS DE POMPE A EAU

REF	OEM
PAF2.6-03000014	69M-G4311-00

F2.5

P. 283



REF	OEM
PAF4-03000019	68D-G4311-01

F4

P. 285
P. 343



REF	OEM
REC63V-44301-00	63V-44301-00-00

F6/8/15/9.9/13.5
T8/9.9
9.9F/FEM/MH/MSH/FMH
13.5AWH
15F/FMH/MSH/MH

P. 289
P. 291
P. 351



new

REF	OEM
PAF20-04040001	6AH-44311-00

F9.9 / 13.5 / 15/20 F
Última versión
Last version
Ultima versione
Dernière version

P. 293



REF	OEM
REC689-44311-00	689-44311-03

20C/CM
25D/DE
30A

P. 353



REF	OEM
REC663-44311-02	663-44311-02-00

25B/BETO
40N/H/E
50G/GEO/GETO
50D
55B/BET
E55CMH
60FEO/FETO/FEDO
60BE/BEM/BET
70CE

P. 357
P. 359
P. 369



REF	OEM
PAF25-04050001	61N-44311-01

25V
30G
F20
F25

P. 297 P. 355



REF	OEM
REC63D-44311-01	63D-44311-00

40V/VM/VE/TLR
C40M-T
50H/HR-M/HM
F40/45/50/60

P. 309 P. 315



REF	OEM
REC676-44311-00	676-44311-00

E40GM/JM
40GW/JW/G/QE/QWC



REF	OEM
REC688-44311-01	688-44311-01

60FETO/TR
E60H-E-M
70BETO/TR
75CETO/TLR
E75B
75A/AE-T-M-D
80A/AE-O-T
85A/AE-D-T
90A/AETO/AEO/TLR

P. 371 P. 373



REF	OEM
REC67F-44311-01	67F-44311-01-00

F80/100

P. 321



REF	OEM
REC61A-44311-00	6E5-44311-00

F80/100/115/150/200/225/250
150F/FET/TR/AET
Z150P/TXR
175D 200F/FETO/G/GETO
200AET
225B/DET/G
250GETO/AET
Z250DET/FET

P. 325 P. 329 P. 333 P. 339 P. 377 P. 381 P. 385 P. 386



new

REF	OEM
PAT40-04000201	66T-44311-00

40X/E40X-MLH
T25/FT25
F30/F40

P. 301 P. 305

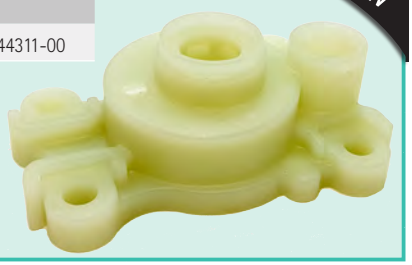

new

REF	OEM
REC6CE-44311-01	6CE-44311-00 6CE-44311-01

F250 (2011+) V6
F300 (2011+) V6

P. 335



new

REF	OEM
REC6H3-44311-00	6H3-44311-00

FT/T 50/60 HP (1997+)
60F (1984-99)



new

REF	OEM
REC6AW-44311-01	6AW-44311-00 6AW-44311-01

F300 (2008-11) V8
F350 (2008+) V8

P. 341



TAPA DE LA BOMBA — WATER PUMP, COVER — COPERCHIO POMPA — PLAQUE DE POMPE A EAU

REF	OEM
REC646-44323-00	646-44323-00

2B
2MSH
2BMH



REF	OEM
PAF2.6-03000010	69M-G4323-00

F2.5



REF	OEM
REC6L5-44323-00	6L5-44323-00

3A/AMH
3MSH



REF	OEM
REC67F-44323-00	667F-44323-00

F75/F80/F100



REF	OEM
REC68T-44323-00	68T-44323-00

F6
T8
F9.9
F20/6/9.9/8/13.5
T8/9.9



REF	OEM
REC63V-44323-00	63V-44323-00-00

9.9F/FMH/FEMH/MSH
F9.9/13.5/15
13.5AWH
15F/FM/MS



REF	OEM
REC6H3-44323-00	6H3-44323-00-00

25B/BETO
F45
50G/GE
T50
F50
FT50
60FE/TLR
FT60
T60
70B/ETN/BE



REF	OEM
REC61N-44323-00	61N-44323-00

25B/BMH/30H
E30HM
30G
E25A
25VE-M
F20/F25



REF	OEM
REC6P2-44323-00	6P2-44323-0

Z250
F225/F250



REF	OEM
REC63D-44323-00	63D-44323-00-00

F30/40/45/50/60
40V/VE-M/Y/YE
C40MLH/T
T50
50H/HM-R



REF	OEM
REC676-44323-00-40	676-44323-00

E40GMH/GW/JMH
40JWH/GWH
40QE/G/QM/QE-2/QWC



REF	OEM
REC66T-44323-00	66T-44323-00

40X/E40X/MLH
40XW/XMH
F30/40/T25



REF	OEM
REC663-44323-00	663-44323-00

50G/GEO/GETO
25Q/QEO/B
55B/BE/BM
30DET/DEO/DMH/ELH
60FEO
FETO
FEDO
70BEO/BETO/BEMO/CE
40N/H
50ETN/D/DE
25J/JEO/JETO/ESH
25Q/QEO/E55CMH
30DET/DEO/DMH/D
55B/BM/BET
40E/H
50D/DE
25J/JEO/JETO/ESH



REF	OEM
REC688-44323-00	688-44323-00-00

60FET/TR
75CETO/AED-T
70BET/TR
75A/AE-M/TLR/CETO/AED-T
E75B
80A/AET/TLR
85A/AE-D-T
90A/AET/ETN/TR



REF	OEM
REC6E5-44323-00-40	6E5-44323-00

100A/AETO/TLR
115CET/A/B/BET
C115TLR
130BET
140AET/BET

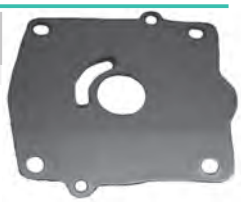

REF	OEM
REC68V-44323-00	6EK-44323-00

F115



REF	OEM
REC6G5-44323-00	6G5-44323-01

F150/200/225
Z150/175/250/300
VZ200
250AET/B/GET
225C/CET/D/DET
150F/FET/AET
175D/DET/AET
200F/FET/GE
225G
200AET/BET
150CET
175BET



KITS DE REPARACIÓN BOMBA DE AGUA | WATER PUMP SERVICE KITS | KIT RICAMBI POMPA ACQUA | KIT REPARATION DE POMPE À EAU

new

REF	OEM
REC6E0-W0078-A2	6E0-W0078-A2 6E0-W0078-00 6E0-W0078-01 6E0-W0078-02



new

REF	OEM
REC69G-W0078-01	69G-W0078-01 69G-W0078-00

FT/T8 D/P/E/M/G (2005+)
FT/T9.9 E/G/M/L (2008+)



new

REF	OEM
REC6A1-W0078-01	6A1-W0078-01

2B (1985-88)



new

REF	OEM
REC6AH-W0078-00	6AH-W0078-00 6AH-W0078-01

F9.9 (2009+)
F13.5B (2007-09)
F15C/E/M (2007+)
F20B/M (2007+)

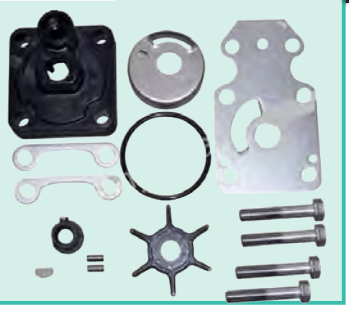

new

REF	OEM
REC6EE-W0078-01	6BX-WG0078-00 6EE-W0078-00 6EE-W0078-01

F4B/M (2010+)
F5A/M (2010+)
F6C/M (2010+)

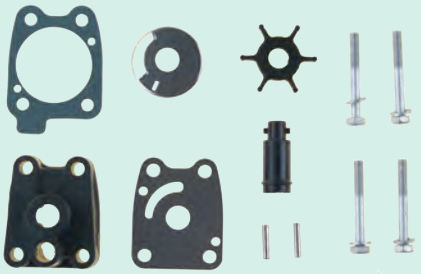

REF	OEM
REC63V-W0078-01	63V-W0078-00

9.9F
13.5AWH
15F
F9.9
F15
F13.5



new

REF	OEM
REC68T-W0078-00	68T-W0078-01 68T-W0078-00

F6A/B/M (2005-09)
F8C/F/M (2005+)
F9.9 F/M/J (2008+)



REF	OEM
REC682-W0078-A1	682-W0078-A1

9.9/15D
F8
F9.9



new

REF	OEM
REC6G1-W0078-A1	6G1-W0078-A1 6G1-W0078-00 6N0-W0078-A0 6G1-W0078-01

6C/D/M/T (1984-14)
8C/N/J/F/T/M (1984-18)

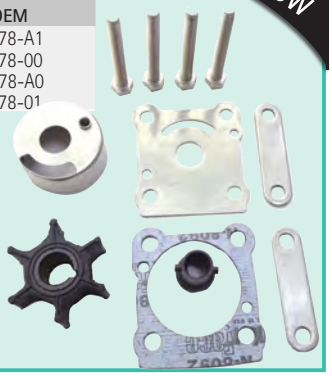

new

REF	OEM
REC61N-W0078-11	61N-W0078-11 61N-W0078-10

F20A/D (1998-17)
F25A/E/T/M/D (1998-18)



REF	OEM
REC689-W0078-04	689-W0078-04

20CM



REF	OEM
REC689-W0078-A6	689-W0078-A6

20C
25D



REF	OEM
REC6L2-W0078-00	6L2-W0078-00

20NE/NEMO/N/MLH/MSH/NW/NMH/D
20D/DEO/DEM/MSH/DM/MLH
20MSH/DMH/DWO



REF	OEM
REC6J8-W0078-A2	6J8-W0078-A1

25J/JEO
30D/DE/DMH



REF	OEM
REC6H4-W0078-00	6H4-W0078-00

25Q/QEO
40N/H/HE
E48CMH
50D/DE/AETN
E55CMH



new

REF	OEM
REC6BG-W0078-00	6BG-W0078-00

F30B (2009+)
F40A/F (2009+)



new

REF	OEM
REC6CJ-W0078-00	6CJ-W0078-00

F40G (2011+)
F70A (2011+)

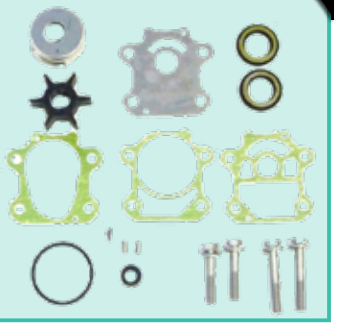

new

REF	OEM
REC63D-W0078-01	63D-W0078-01

40V/C40 (1998+)
50H (1997-03)
F45A (1997-00)
F50A/H/F/T (1997+)
F40A/E/Y/D/H (1999+)
F60A/B/C/T (2002+)

F40/45/50/60
40V/VMH/VETO/VMH
C40MLH/T/TLR
40VE/VEO/VES
40Y/YETO
50H/HET/HMH

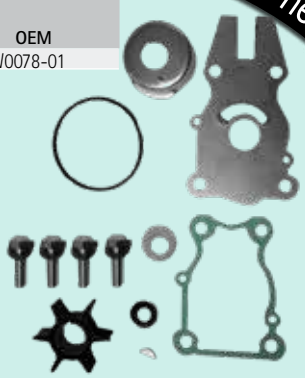

REF	OEM
REC679-W0078-A1	679-W0078-00

40QE



REF	OEM
REC6F5-W0078-A0	6F5-W0078-00

E40GMH
40GWH



REF	OEM
REC66T-W0078-00	66T-W0078-01

40X
E40X



REF	OEM
REC67F-W0078-00	67F-W0078-00

F80/100



new

REF	OEM
REC663-W0078-01	663-W0078-01

55B (1992-18)
55BET



REF	OEM
REC6N6-W0078-02	6N6-W0078-00

115B/BE/BET/CETO/TRX/CETO
130BET/TLR



REF	OEM
REC6K5-W0078-01	6K5-W0078-01

E60HM
E-60H



REF	OEM
REC68V-W0078-00	68V-W0078-00

F115
FL115
LF115



REF	OEM
REC6H3-W0078-02	6H3-W0078-00

60FE/FET/FEO/FETO
70AETN/B/BEH/BEO/CE



REF	OEM
REC65N-W0078-A1	65N-W0078-A1

D150H/N/NETOL

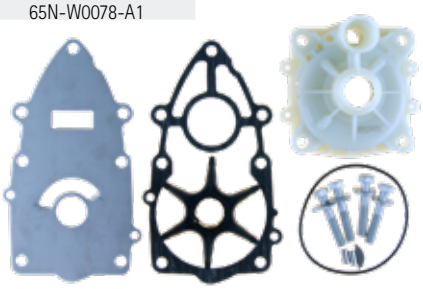

REF	OEM
REC692-W0078-02	692-W0078-02

60TR/FETO
75AED/AET
75CETO/TLR/E75B
70BETO/TR
80A
85A/AE/AED/AET/AEM
90A/AETO/AEMO/TLR
C90TRZ



new

REF	OEM
REC6G5-W0078-A1	6G5-W0078-00 6G5-W0078-01 6G5-W0078-A1

150A/C/E (1984-91)
175A/B (1984-91)
200A/E/B (1984-91)
225A/B (1987-91)

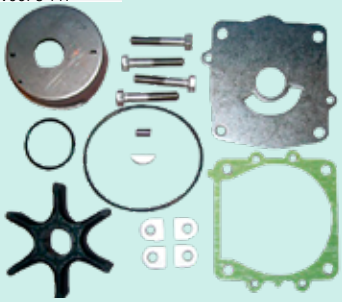

new

REF	OEM
REC6P2-W0078-00	6P2-W0078-00

F225C/T (2008-15)
F250B/T/A (2009+)

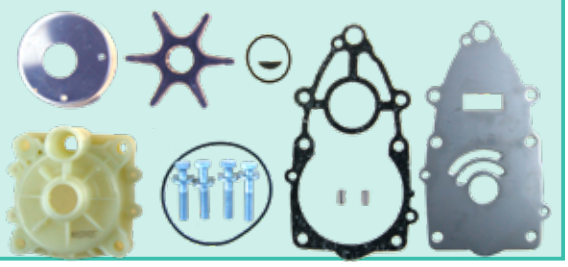

new

REF	OEM
REC6CE-W0078-01	6CE-W0078-01 6CE-W0078-00

F300A/B/C (2001+) V6
F250 C/D (20011+) V6
F225 C/F/L (2011+) V6



REF	OEM
REC61A-W0078-A1	61A-W0078-01

250ETD/AETO/AET
150FETO
175FETO
200FETO

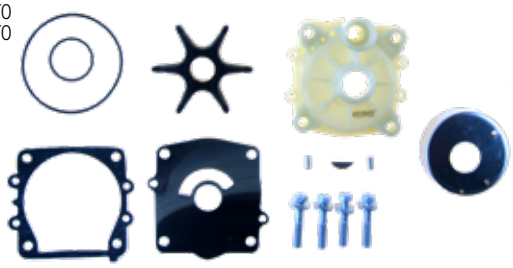

new

REF	OEM
REC6AW-W0078-00	6AW-W0078-00

F300A/T (2008-11) V8
F350A/C/T (2008+) V8



REF	OEM
REC60X-W0078-00	60X-W0078-00

Z250FETO
V250TLR
Z300BETO
V300TLR



GUÍA KITS DE BOMBA DE AGUA — GUIDE OF WATER PUMP SERVICE KITS — GUIDA KIT POMPA ACQUA — GUIDE KITS POMPES A EAU

			REF	OEM
4AC/AS		1985-96	REC6E0-W0078-A2	6E0-W0078-A2, -00,-01,-02
5C/CS		1985-96		
F9.9	6CA1 - 6AC9	2009-16	REC6AH-W0078-00	6AH-W0078-00
F13.5	6AF1 - 6AF3	2007-09		
F15	6AG1 - 6AG9	2007-14		
F15	6AGA - 6AGB	2015-16		
F20	6AH1 - 6AH9	2007-14		
F20	6AHA - 6AHB	2015-16		
F300	6BK1 - 6BK4	2008-11	REC6AW-W0078-00	6AW-W0078-00
F300	6BJ1 - 6BJ4	2008-11		
F350	6AW1 - 6AW9	2008-15		
F350	6AX1 - 6AX9	2008-15		

			REF	OEM
F30	6BT1 - 6BT9	2009-16	REC6BG-W0078-00	6BG-W0078-00
F40	6BG1 - 6BG9	2009-16		
F40	6CY1 - 6CY7	2011-16	REC6CJ-W0078-00	6CJ-W0078-00
F70	6CJ1 - 6CJ7	2011-16		
F225	6CL1 - 6CL4	2011-13	REC6CE-W0078-01	6CE-W0078-00,-01
F225	6CM1 - 6CM4	2011-13		
F250	6CG1 - 6CG4	2011-13		
F250	6CH1 - 6CH4	2011-13		
F300	6CE1 - 6CE4	2011-13		
F300	6CF1 - 6CF4	2011-13		

GUÍA BOMBAS DE AGUA — GUIDE WATER PUMP — GUIDA POMPA ACQUA — GUIDE POMPE À EAU

			1	2	3	4	5	6	7	KIT
F2.5	69F0 > 69F3 60N1 > 60N5	2003	REC6L5-44352-00	PAF2.6-03000015	PAF2.6-03000010	PAF2.6-03000014	PAJASOF404-19-033	PAF4-03000021	PAF2.6-03000013	
F4	68R > 68R3 60P1 > 60P2	2002-09	REC6E0-44352-00	REC6E0-44322-02	PAF4-03000015	PAF4-03000019	PAF4-03000018	PAF4-03000021	PAF4-03000016	
F5		2010	REC6E0-44352-00	PAF6-03000002		PAF6-03000001		PAF4-03000021	PAF4-03000016	
F6B, BMH, A, AM, AW, ML, MH	6J6 > 6J7	2001-09	REC68T-44352-00	REC63V-44322-00	REC68T-44323-00	REC63V-44301-00	REC93210-44398	REC68T-44366-00	REC664-44338-00	REC68T-W0078-00
F6A, ML, MS, AM, BM	60R1 > 60R9 68T > 68T3 60RA > 60RB 6FW1	2000-06	REC68T-44352-00	REC63V-44322-00	REC68T-44323-00	REC63V-44301-00	REC93210-44398	REC68T-44366-00	REC664-44338-00	REC68T-W0078-00
F6 (1cyl)		2010	REC6E0-44352-00	PAF6-03000002		PAF6-03000001	PAF4-03000018	PAF4-03000021	PAF4-03000016	
F8AM, B, BE, BM	6G8	1986-95	REC682-44352-01	REC682-44322-00	REC682-44323-40		REC682-44315-00	REC682-44365-00	REC90280-03024	REC682-W0078-A1
F8C, ML, CM, MS, MH, ML, FM	6G9	2000-15	REC68T-44352-00	REC63V-44322-00	REC68T-44323-00	REC63V-44301-00	REC93210-44398	REC68T-44366-00	REC664-44338-00	REC68T-W0078-00
T8		2001-10	REC63V-44352-01	REC63V-44322-00	REC68T-44323-00	REC63V-44301-00	REC93210-44398	REC68T-44366-00	REC664-44338-00	
F9.9A, AE, AM	66N>66N8	1985-96	REC682-44352-01	REC682-44322-00	REC682-44323-40		REC682-44315-00	REC682-44365-00	REC90280-03024	REC682-W0078-A1
F9.9B, BE, BM	6AU1>6AU6 6DR1>6DR3	1985-96	REC682-44352-01	REC682-44322-00	REC682-44323-40		REC682-44315-00	REC682-44365-00	REC90280-03024	REC682-W0078-A1
F9.9	66R>66R8	1985-04	REC682-44352-01	REC682-44322-00	REC682-44323-40		REC682-44315-00	REC682-44365-00	REC90280-03024	REC682-W0078-A1
F9.9C, CE, CM, CW, MH	69C>69C1	1998-08	REC63V-44352-01	REC63V-44322-00	REC63V-44323-00	REC63V-44301-00	REC93210-44398	REC647-44366-00	REC664-44338-00	REC63V-W0078-01
F9.9F, FE, FM, MH, ML, JE, JM		2008-15	REC63V-44352-01	REC63V-44322-00	REC68T-44323-00	REC63V-44301-00	REC93210-44398	REC68T-44366-00	REC664-44338-00	REC68T-W0078-00
FT9.9D, DE, DM, DW		1999-08	REC63V-44352-01	REC63V-44322-00	REC63V-44323-00	REC63V-44301-00	REC93210-44398	REC647-44366-00	REC664-44338-00	REC63V-W0078-01
FT9.9D, DEP, PLR, TR	6CA1>6CA8	2000-02	REC63V-44352-01	REC63V-44322-00	REC63V-44323-00	REC63V-44301-00	REC93210-44398	REC647-44366-00	REC664-44338-00	REC63V-W0078-01
FT9.9		1985-99	REC682-44352-01	REC682-44322-00	REC682-44323-40		REC682-44315-00	REC682-44365-00	REC90280-03024	REC682-W0078-A1
T9.9	69V2>69V8	1991-99	REC682-44352-01	REC682-44322-00	REC682-44323-40		REC682-44315-00	REC682-44365-00	REC90280-03024	REC682-W0078-A1
F9.9HE,HMH	6P71>6P74	2009-15	REC63V-44352-01	REC63V-44322-00				PAF25-04050004	REC664-44338-00	REC6AH-W0078-00
T9.9	6AF1>6AF3	2005-06	REC63V-44352-01	REC63V-44322-00	REC63V-44323-00	REC63V-44301-00	REC93210-44398	REC647-44366-00	REC664-44338-00	REC63V-W0078-01
F13.5AE,AM	66M>66M7	2002-07	REC63V-44352-01	REC63V-44322-00	REC63V-44323-00	REC63V-44301-00	REC93210-44398	REC647-44366-00	REC664-44338-00	REC63V-W0078-01
F13.5AEP		2005-07	REC63V-44352-01	REC63V-44322-00	REC63V-44323-00	REC63V-44301-00	REC93210-44398	REC647-44366-00	REC664-44338-00	REC63V-W0078-01
F13.5B, BMH	6AG1>6AG9 6AGA	2007-09	REC63V-44352-01	REC63V-44322-00				PAF25-04050004	REC664-44338-00	REC6AH-W0078-00
F15A, AE, AM, EL, MH	65P1>65P5	1998-07	REC63V-44352-01	REC63V-44322-00	REC63V-44323-00	REC63V-44301-00	REC93210-44398	REC647-44366-00	REC664-44338-00	REC63V-W0078-01
F15	6DN1>6DN6	2006-11	REC63V-44352-01	REC63V-44322-00	REC68T-44323-00		REC93210-49046	PAF25-04050004	REC664-44338-00	
F15CE, CM, CW, EL, MH	6AH1>6AH9 6AHA	2007-15	REC63V-44352-01	REC63V-44322-00				PAF25-04050004	REC664-44338-00	REC6AH-W0078-00
F20AE	65W>65W9	2003-06	REC6H4-44352-02	REC61N-44322-00	REC61N-44323-00	PAF25-04050001	PAF25-04050003	PAF25-04050004	REC90280-03024	REC61N-W0078-11
F20DET	6BP1>6BP8	2011-15	REC6H4-44352-02	REC61N-44322-00	REC61N-44323-00	PAF25-04050001	PAF25-04050003	PAF25-04050004	REC90280-03024	REC61N-W0078-11
F20B, BE, BM, BW, EL, MH		2007-15	REC63V-44352-01	REC63V-44322-00				PAF25-04050004	REC664-44338-00	REC6AH-W0078-00
F25A, AE, AM, AW, EL, MH		1998-09	REC6H4-44352-02	REC61N-44322-00	REC61N-44323-00	PAF25-04050001	PAF25-04050003	PAF25-04050004	REC90280-03024	REC61N-W0078-11
F25DE, DM, MH	6BT1>6BT8	2009-215	REC6H4-44352-02	REC61N-44322-00	REC61N-44323-00	PAF25-04050001	PAF25-04050003	PAF25-04050004	REC90280-03024	REC61N-W0078-11
T25	66W>66W1	2001-06, 2009	REC6H4-44352-02	REC63D-44322-00	REC66T-44323-00		REC93210-59MG7		REC90280-03M03	REC66T-W0078-00
F30	60K1	2001-05	REC6H4-44352-02	REC63D-44322-00	REC66T-44323-00		REC93210-59MG7		REC90280-03M03	REC66T-W0078-00
F30BE		2009-15	REC6H4-44352-02	REC63D-44322-00	REC63D-44323-00		REC93210-59MG7	REC663-44366-00	REC90280-03M03	REC6BG-W0078-00
F40 A, ELH	6BG1>6BG8	1999-02	REC6H3-44352-00	REC63D-44322-00	REC63D-44323-00		REC93210-59MG7		REC90280-03024	REC63D-W0078-01
F40 CET	6AK1>6AK9 6AKA>6AKB	2002	REC6H3-44352-00	REC63D-44322-00	REC63D-44323-00		REC93210-59MG7		REC90280-03024	REC63D-W0078-01
F40	6CY1>6CY6	2000-08	REC6H4-44352-02	REC63D-44322-00	REC66T-44323-00		REC93210-59MG7		REC90280-03M03	REC66T-W0078-00
F40FE	62Y	2009-15	REC6H4-44352-02	REC63D-44322-00	REC63D-44323-00		REC93210-59MG7	REC663-44366-00	REC90280-03M03	REC6BG-W0078-00
F40D, DE, HE	62Y	2006-15	REC6H3-44352-00	REC63D-44322-00	REC63D-44323-00		REC93210-59MG7	REC663-44366-00	REC90280-03024	REC63D-W0078-01
F40GET	62Y>62Y6	2011-15	REC6H3-44352-00 REC63D-44322-00					REC663-44366-00	REC90280-03M03	REC6CJ-W0078-00
F45 AET	60A3 60AA	1999	REC6H4-44352-02	REC61N-44322-00	REC61N-44323-00	PAF25-04050001	PAF25-04050003	PAF25-04050004	REC90280-03024	REC61N-W0078-11
F50TJR	6C11>6C19	2003	REC6H4-44352-02	REC61N-44322-00	REC61N-44323-00	PAF25-04050001	PAF25-04050003	PAF25-04050004	REC90280-03024	REC61N-W0078-11
F50 A, AE, TJ, TL	6C1A>6C1C	1997-07	REC6H3-44352-00	REC63D-44322-00	REC63D-44323-00		REC93210-59MG7	REC663-44366-00	REC90280-03024	REC63D-W0078-01
F50 DETL	64J	1995-10	REC6H3-44352-00	REC63D-44322-00	REC63D-44323-00		REC93210-59MG7	REC663-44366-00	REC90280-03024	REC63D-W0078-01
F50F, FE, TR, TL		2005-12	REC6H3-44352-00	REC63D-44322-00	REC63D-44323-00		REC93210-59MG7	REC663-44366-00	REC90280-03024	REC63D-W0078-01
F50 HED	69W1>69W6	2013-15	REC6H3-44352-00	REC63D-44322-00	REC63D-44323-00		REC93210-59MG7	REC663-44366-00	REC90280-03024	REC63D-W0078-01
FT50B, T50TLR	6C51>6C59	1997-99	REC6H3-44352-00	REC63D-44322-00	REC63D-44323-00		REC93210-59MG7	REC663-44366-00	REC90280-03024	REC63D-W0078-01
T50	6C5A>6C5C	1996	REC6H3-44352-00	REC663-44322-00	REC6H3-44323-00		REC6H3-44315-00		REC90280-03024	REC6H3-W0078-02
F60 AE, TL, TJ		2002-07	REC6H3-44352-00	REC63D-44322-00	REC63D-44323-00		REC6H3-44315-00	REC663-44366-00	REC90280-03M03	REC63D-W0078-01
F60 A, C, CET, TR, TJR	6CJ1>6CJ6	2005-12	REC6H3-44352-00	REC63D-44322-00	REC63D-44323-00		REC6H3-44315-00	REC663-44366-00	REC90280-03M03	REC63D-W0078-01
F60 B, FET	6D61	2013-15	REC6H3-44352-00	REC63D-44322-00	REC63D-44323-00		REC6H3-44315-00	REC663-44366-00	REC90280-03M03	REC63D-W0078-01
T60	67G0>67G5	2003-11	REC6H3-44352-00	REC663-44322-00	REC6H3-44323-00		REC6H3-44315-00		REC90280-03M03	REC6H3-W0078-02
F70A, AET	6D71>6D79 6D7A>6D7C	2011-15	REC6H3-44352-00 REC63D-44322-00					REC663-44366-00	REC90280-03M03	REC6CJ-W0078-00
F75BET, TR, TLR		2005	REC67F-44352-00	REC67F-44322-00	REC67F-44323-00	REC67F-44311-01	REC688-44315-00		REC90280-04M04	REC67F-W0078-00
F80A, AET, TLR, TJR	67F>67F5	1999-03	REC67F-44352-00	REC67F-44322-00	REC67F-44323-00	REC67F-44311-01	REC688-44315-00		REC90280-04M04	REC67F-W0078-00
F80B, BET	6D91>6D99 6D9A>6D9C	2005-15	REC67F-44352-00	REC67F-44322-00	REC67F-44323-00	REC67F-44311-01	REC688-44315-00		REC90280-04M04	REC67F-W0078-00
F90	68V, 68V0, 68W0	2003-11	REC67F-44352-00	REC67F-44322-00	REC67F-44323-00	REC67F-44311-01	REC688-44315-00		REC90280-04M04	REC67F-W0078-00
F100A, AET, TLR, TRZ		1999-06	REC67F-44352-00	REC67F-44322-00	REC67F-44323-00	REC67F-44311-01	REC688-44315-00		REC90280-04M04	REC67F-W0078-00

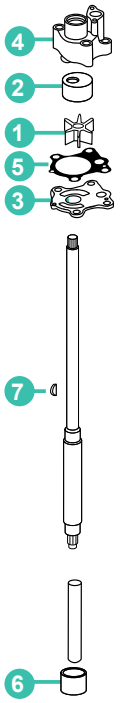

			1	2	3	4	5	6	7	KIT
F100DET	68V, 68V0, 68W0	2005-15	REC67F-44352-00	REC67F-44322-00	REC67F-44323-00	REC67F-44311-01	REC688-44315-00		REC90280-04M04	REC67F-W0078-00
F115A (68V/68V0)		2000-01	REC6E5-44352-01	REC61A-44322-02	REC6E5-44323-00-40	REC6E5-44311-00	REC93210-86M38	REC6E5-44366-00	REC90280-04M05	REC6N6-W0078-02
F115TLR (68V)	68V1>68V9 68VA>68VF	2000	REC6E5-44352-01	REC61A-44322-02	REC6E5-44323-00-40	REC6E5-44311-00	REC93210-86M38	REC6E5-44366-00	REC90280-04M05	REC6N6-W0078-02
F115TLR/ TRZ/ TXR	68W1>68W9 68WA>68WF	2000-01	REC6E5-44352-01	REC61A-44322-02	REC6E5-44323-00-40	REC6E5-44311-00	REC93210-86M38	REC6E5-44366-00	REC90280-04M05	REC6N6-W0078-02
LF115TXR (68W/68W0)	6EK1>6EK2 6EL1>6EL2	2000-01	REC6E5-44352-01	REC61A-44322-02	REC6E5-44323-00-40	REC6E5-44311-00	REC93210-86M38	REC6E5-44366-00	REC90280-04M05	REC6N6-W0078-02
F115A, AET, TJR	6EM1	2002-15	REC6E5-44352-01	REC61A-44322-02	REC68V-44323-00	REC61A-44311-00	REC93210-86M38	REC6E5-44365-00	REC90280-04M05	REC68V-W0078-00
LF/FL115A, AET, TX, TR, B, BET		2002-15	REC6E5-44352-01	REC61A-44322-02	REC68V-44323-00	REC61A-44311-00	REC93210-86M38	REC6E5-44365-00	REC90280-04M05	REC68V-W0078-00
F/LF/FL115B, BET		2014-15	REC6E5-44352-01	REC61A-44322-02	REC68V-44323-00	REC61A-44311-00	REC93210-86M38	REC6E5-44365-00	REC90280-04M05	REC68V-W0078-00
F130A, AET		2015	REC6E5-44352-01	REC61A-44322-02	REC68V-44323-00	REC61A-44311-00	REC93210-86M38	REC6E5-44365-00	REC90280-04M05	REC68V-W0078-00
F150/FL150		2004-12	REC6E5-44352-01	REC61A-44322-02	REC6G5-44323-00	REC61A-44311-00	REC93210-86M38	REC6E5-44365-00	REC90280-04M05	REC61A-W0078-A1
F200/FL200		2002-11	REC6E5-44352-01	REC61A-44322-02	REC6G5-44323-00	REC61A-44311-00	REC93210-86M38	REC6E5-44365-00	REC90280-04M05	REC61A-W0078-A1
VF200	6BB2>6BB9	2009-11	REC6E5-44352-01	REC61A-44322-02		REC61A-44311-00	REC93210-86M38	REC6E5-44365-00		
F225/FL225	6CL1>6CL4 6CM1>6CM4	2002-10	REC6E5-44352-01	REC61A-44322-02	REC6G5-44323-00	REC61A-44311-00	REC93210-86M38	REC6E5-44365-00	REC90280-04M05	REC61A-W0078-A1
F225/FL225		2007-09 (20")	REC6E5-44352-01	REC61A-44322-02	REC6P2-44323-00	REC61A-44311-00	REC93210-86M38	REC6E5-44365-00	REC90280-04M05	REC6P2-W0078-00
F225CET		2009-15	REC6E5-44352-01	REC61A-44322-02	REC6P2-44323-00	REC61A-44311-00	REC93210-86M38	REC6E5-44365-00	REC90280-04M05	REC6P2-W0078-00
LF/FL/F225CA, FET	6BR1>6BR3 6BS1>6BS3	2011-13	REC6CE-44352-00							
VF225	6P2A 6P23>6P29	2009-11	REC6E5-44352-01	REC61A-44322-02		REC61A-44311-00	REC93210-86M38	REC6E5-44365-00		
F250/FL250	6P33>6P39	2005	REC6E5-44352-01	REC61A-44322-02	REC6G5-44323-00	REC61A-44311-00	REC93210-86M38	REC6E5-44365-00	REC90280-04M05	REC61A-W0078-A1
FL/F250BET	6CG1>6CG4 6CH1>6CH4	2001-11	REC6E5-44352-01	REC61A-44322-02	REC6P2-44323-00	REC61A-44311-00	REC93210-86M38	REC6E5-44365-00	REC90280-04M05	REC6P2-W0078-00
F250A, AET, TR, TUR		2007-13	REC6E5-44352-01	REC61A-44322-02	REC6P2-44323-00	REC61A-44311-00	REC93210-86M38	REC6E5-44365-00	REC90280-04M05	REC6P2-W0078-00
LF/FL250A, AET, TR, TX	6CE1>6CE4 6CF1>6CF4	2007-12	REC6E5-44352-01	REC61A-44322-02	REC6P2-44323-00	REC61A-44311-00	REC93210-86M38	REC6E5-44365-00	REC90280-04M05	REC6P2-W0078-00
LF/FL/F250CA, DET	6BJ1>6BJ4 6BK1>6BK4	2011-13	REC6CE-44352-00							
VF250	6AW1>6AW9	2009-10	REC6E5-44352-01	REC61A-44322-02		REC61A-44311-00	REC93210-86M38	REC6E5-44365-00	REC90280-04M05	
F300/FL-300BET, CA	6AX1>6AX9	2011-13	REC6CE-44352-00							
F300/FL300AET		2008-11	CEF500389N							REC6AW-W0078-00
F350AET, CB, TRG, TUR		2008-15	CEF500389N							REC6AW-W0078-00
LF/ FL350AET, CB, TRG, TUR		2008-15	CEF500389N							REC6AW-W0078-00

2T STROKES GUÍA BOMBAS DE AGUA — GUIDE WATER PUMP — GUIDA POMPA ACQUA — GUIDE POMPE À EAU

			1	2	3	4	5	6	7	KIT
2B	6A1	1985-99			REC646-44323-00					REC6A1-W0078-01
2B, MSHA	6A11>6A12 6F89	2002-10	REC646-44352-01		REC646-44323-00					
4AC, AS	6E0>6E1	1985-96	REC6E0-44352-00	REC6E0-44322-02	PAF4-03000015			PAF4-03000021		REC6E0-W0078-A2
5C, CS	6E3>6E4	1985-96	REC6E0-44352-00	REC6E0-44322-02	PAF4-03000015			PAF4-03000021		REC6E0-W0078-A2
6 D /DEM	6H8	1984-96	REC6G1-44352-00	REC6G1-44322-00	REC6G1-44323-00		REC6G1-44315-A0	REC647-44366-00	REC90280-03024	REC6G1-W0078-A1
6 J/ C / CEM	6H6	1984-96	REC6G1-44352-00	REC6G1-44322-00	REC6G1-44323-00		REC6G1-44315-A0	REC647-44366-00	REC90280-03024	REC6G1-W0078-A1
8 N/ J / C / CEM	6G1	1984-96	REC6G1-44352-00	REC6G1-44322-00	REC6G1-44323-00		REC6G1-44315-A0	REC647-44366-00	REC90280-03024	REC6G1-W0078-A1
9.9D	6,00E+007	1984-95	REC682-44352-01	REC682-44322-00	REC682-44323-40		REC682-44315-00	REC682-44365-00	REC90280-03024	REC682-W0078-A1
9.9F, FEM, FM, MH, MS	63V	1995-00	REC63V-44352-01	REC63V-44322-00	REC63V-44323-00	REC63V-44301-00	REC93210-44398	REC647-44366-00	REC664-44338-00	REC63V-W0078-01
13.5AWH	63V	1998	REC63V-44352-01	REC63V-44322-00	REC63V-44323-00	REC63V-44301-00	REC93210-44398	REC647-44366-00	REC664-44338-00	REC63V-W0078-01
15D	6,00E+008	1984-95	REC682-44352-01	REC682-44322-00	REC682-44323-40		REC682-44315-00	REC682-44365-00	REC90280-03024	REC682-W0078-A1
15F, FEM, MH, MS	63W	1995-00	REC63V-44352-01	REC63V-44322-00	REC63V-44323-00	REC63V-44301-00	REC93210-44398	REC647-44366-00	REC664-44338-00	REC63V-W0078-01
20D, DE, DM, MLH, MSH, DW	6L3>6L39	1998-11	REC6L2-44352-00	REC6L2-44322-00			REC93210-45161	PAF25-04050004	PAF25-04000015	REC6L2-W0078-00
20C	6A9/ 6A90/ 6A91	1997-02	REC689-44352-02	REC689-W4432-01	REC689-44323-00	REC689-44311-00	REC689-44324-A0	REC689-44366-00	REC664-44338-00	REC689-W0078-A6
20CM	6A9	1992	REC689-44352-02	REC689-W4432-01	REC689-44323-00	REC689-44311-00	REC689-44324-A0	REC689-44366-00	REC664-44338-00	REC689-W0078-A6
25D	6950	2001	REC689-44352-02	REC689-W4432-01	REC689-44323-00	REC689-44311-00	REC689-44324-A0	REC689-44366-00	REC664-44338-00	REC689-W0078-A6
25		1984-85	REC689-44352-02	REC689-W4432-01	REC689-44323-00	REC689-44311-00	REC689-44324-A0	REC689-44366-00	REC664-44338-00	REC689-W0078-04
25D, N, NE, MLH, MSH, NMH	6L2>6L29	1998-10	REC6L2-44352-00	REC6L2-44322-00			REC93210-45161	PAF25-04050004	PAF25-04000015	REC6L2-W0078-00
25NMH, NW, MH	6L2A>6L2F	2011-15	REC6L2-44352-00	REC6L2-44322-00			REC93210-45161	PAF25-04050004	PAF25-04000015	REC6L2-W0078-00
25 J, JEO	6K9	1987-94	REC6H4-44352-02	REC663-44322-00	REC663-44323-00	REC663-44311-02	REC663-44315-A0	REC663-44366-00	REC90280-03024	REC6J8-W0078-A2
C25		1990-97	REC689-44352-02	REC689-W4432-01	REC689-44323-00	REC689-44311-00	REC689-44324-A0	REC689-44366-00	REC664-44338-00	REC689-W0078-A6
CV25		1990	REC689-44352-02	REC689-W4432-01	REC689-44323-00	REC689-44311-00	REC689-44324-A0	REC689-44366-00	REC664-44338-00	REC689-W0078-A6
30		1984-85	REC689-44352-02	REC689-W4432-01	REC689-44323-00	REC689-44311-00	REC689-44324-A0	REC689-44366-00	REC664-44338-00	REC689-W0078-04
30		1986	REC689-44352-02	REC689-W4432-01	REC689-44323-00	REC689-44311-00	REC689-44324-A0	REC689-44366-00	REC664-44338-00	REC689-W0078-A6
30D		1986-94	REC6H4-44352-02	REC663-44322-00	REC663-44323-00	REC663-44311-02	REC663-44315-A0	REC663-44366-00	REC90280-03024	REC682-W0078-A1
30D, DE, DMH	6J8	1986-94	REC6H4-44352-02	REC663-44322-00	REC663-44323-00	REC663-44311-02	REC663-44315-A0	REC663-44366-00	REC90280-03024	REC6J8-W0078-A2
C30		1990-92	REC689-44352-02	REC689-W4432-01	REC689-44323-00	REC689-44311-00	REC689-44324-A0	REC689-44366-00	REC664-44338-00	REC689-W0078-A6
C30		1993-97	REC6H4-44352-02	REC61N-44322-00	REC61N-44323-00	PAF25-04050001	PAF25-04050003	PAF25-04050004	REC90280-03024	REC61N-W0078-11
40		1984-87	REC6H4-44352-02	REC663-44322-00	REC663-44323-00	REC663-44311-02	REC663-44315-A0	REC663-44366-00	REC90280-03024	REC6H4-W0078-00
40		1988-94	REC6H4-44352-02	REC663-44322-00	REC663-44323-00		REC663-44315-A0	REC663-44366-00	REC90280-03024	REC6H4-W0078-00

			1	2	3	4	5	6	7	KIT
40		1995-05	REC6H3-44352-00	REC63D-44322-00	REC63D-44323-00	REC63D-44311-01	REC93210-59MG7	REC663-44366-00	REC90280-03024	REC63D-W0078-01
E40GMH	6F62	2003	REC6F5-44352-00	REC676-44322-00	REC676-44323-00-40	REC676-44311-00	REC676-44315-00	REC663-44366-00	REC90280-04M00	REC6F5-W0078-A0
40GWH	6F62	2003	REC6F5-44352-00	REC676-44322-00	REC676-44323-00-40	REC676-44311-00	REC676-44315-00	REC663-44366-00	REC90280-04M00	REC6F5-W0078-A0
C40		1990-91	REC6F5-44352-00	REC676-44322-00	REC676-44323-00-40	REC676-44311-00	REC676-44315-00	REC663-44366-00	REC90280-04M00	REC6F5-W0078-A0
C40		1992-97	REC6F5-44352-00	REC676-44322-00	REC676-44323-00-40	REC676-44311-00	REC676-44315-00	REC663-44366-00	REC90280-04M00	REC679-W0078-A1
40QE	6R6	1990	REC6F5-44352-00	REC676-44322-00	REC676-44323-00-40	REC676-44311-00	REC676-44315-00	REC663-44366-00	REC90280-04M00	REC679-W0078-A1
EK40JMH	6H95	2006	REC6F5-44352-00	REC676-44322-00	REC676-44323-00-40	REC676-44311-00	REC676-44315-00	REC663-44366-00	REC90280-04M00	REC679-W0078-A1
C40MLH	63B>63B2	2000-03	REC6H3-44352-00	REC63D-44322-00	REC63D-44323-00	REC63D-44311-01	REC93210-59MG7	REC663-44366-00	REC90280-03024	REC63D-W0078-01
C40T, TLRZ	63D>63D6	1996-03	REC6H3-44352-00	REC63D-44322-00	REC63D-44323-00	REC63D-44311-01	REC93210-59MG7	REC663-44366-00	REC90280-03024	REC63D-W0078-01
P40		1998	REC6H3-44352-00	REC63D-44322-00	REC63D-44323-00	REC63D-44311-01	REC93210-59MG7	REC663-44366-00	REC90280-03024	REC63D-W0078-01
40V, VE	63D>63D6	1996-03	REC6H3-44352-00	REC63D-44322-00	REC63D-44323-00	REC63D-44311-01	REC93210-59MG7	REC663-44366-00	REC90280-03024	REC63D-W0078-01
40V, VE, VEO, VES	63C>63C9 63CA>63CF	1997-15	REC6H3-44352-00	REC63D-44322-00	REC63D-44323-00	REC63D-44311-01	REC93210-59MG7	REC663-44366-00	REC90280-03024	REC63D-W0078-01
40V, VMH	63B>63BF	1995-15	REC6H3-44352-00	REC63D-44322-00	REC63D-44323-00	REC63D-44311-01	REC93210-59MG7	REC663-44366-00	REC90280-03024	REC63D-W0078-01
50		1984-87	REC6H4-44352-02	REC663-44322-00	REC663-44323-00	REC663-44311-02	REC663-44315-A0	REC663-44366-00	REC90280-03024	REC6H4-W0078-00
50		1988-94	REC6H4-44352-02	REC663-44322-00	REC663-44323-00	REC663-44311-02	REC663-44315-A0	REC663-44366-00	REC90280-03024	REC6H4-W0078-00
50HMDO, H	62W,63G	1995-00	REC6H3-44352-00	REC63D-44322-00	REC63D-44323-00	REC63D-44311-01	REC93210-59MG7	REC663-44366-00	REC90280-03024	REC63D-W0078-01
50H, HEM, HWH/ C50TLR	62X>62X5	2000-03	REC6H3-44352-00	REC63D-44322-00	REC63D-44323-00	REC63D-44311-01	REC93210-59MG7	REC663-44366-00	REC90280-03024	REC63D-W0078-01
C50		1998-01	REC6H3-44352-00	REC63D-44322-00	REC63D-44323-00	REC63D-44311-01	REC93210-59MG7	REC663-44366-00	REC90280-03024	REC63D-W0078-01
PRO 50		1987	REC6H4-44352-02	REC663-44322-00	REC663-44323-00	REC663-44311-02	REC663-44315-A0	REC663-44366-00	REC90280-03024	REC6H4-W0078-00
PRO 50		1988-90	REC6H4-44352-02	REC663-44322-00	REC663-44323-00	REC663-44311-02	REC663-44315-A0	REC663-44366-00	REC90280-03024	REC6H4-W0078-00
P50		1991-93	REC6H4-44352-02	REC663-44322-00	REC663-44323-00	REC663-44311-02	REC663-44315-A0	REC663-44366-00	REC90280-03024	REC6H4-W0078-00
P50		1995-96	REC6H3-44352-00	REC689-W4432-01	REC63D-44323-00	REC63D-44311-01	REC93210-59MG7	REC663-44366-00	REC90280-03024	REC63D-W0078-01
55B, BET, BM	697	1992-00	REC6H3-44352-00	REC663-44322-00	REC663-44323-00	REC663-44311-02	REC663-44315-A0	REC663-44366-00	REC90280-03M03	REC663-W0078-01
55B, BET, BM	6970>6971	1989	REC6H3-44352-00	REC663-44322-00	REC663-44323-00	REC663-44311-02	REC663-44315-A0	REC663-44366-00	REC90280-03M03	REC663-W0078-01
60		2001-03	REC6H3-44352-00	REC663-44322-00	REC6H3-44323-00		REC6H3-44315-00	REC663-44366-00	REC90280-03M03	REC6H3-W0078-02
60		2004-05	REC688-44352-03	REC688-44322-00	REC688-44323-00	REC688-44311-01	REC688-44315-00	REC663-44366-00	REC90280-04M04	REC692-W0078-02
C60		1996-01	REC6H3-44352-00	REC663-44322-00	REC6H3-44323-00		REC6H3-44315-00	REC663-44366-00	REC90280-03M03	REC6H3-W0078-02
E60		1995-96	REC6H3-44352-00	REC663-44322-00	REC6H3-44323-00		REC6H3-44315-00	REC663-44366-00	REC90280-03M03	REC6H3-W0078-02
E-60H/ E60HMH	6K5	1997-00	REC6H3-44352-00		REC6H3-44323-00		REC6H3-44315-00	REC663-44366-00	REC90280-03M03	REC6K5-W0078-01
P60		1991	REC6H3-44352-00	REC663-44322-00	REC6H3-44323-00		REC6H3-44315-00	REC663-44366-00	REC90280-03M03	REC6H3-W0078-02
P60		1992-99	REC6H3-44352-00	REC663-44322-00	REC6H3-44323-00		REC6H3-44315-00	REC663-44366-00	REC90280-03M03	REC6H3-W0078-02
70		1 984-03	REC6H3-44352-00	REC663-44322-00	REC6H3-44323-00		REC6H3-44315-00	REC663-44366-00	REC90280-03M03	REC6H3-W0078-02
70		2004-09	REC688-44352-03	REC688-44322-00	REC688-44323-00	REC688-44311-01	REC688-44315-00	REC663-44366-00	REC90280-04M04	REC692-W0078-02
C70		2000-01	REC6H3-44352-00	REC663-44322-00	REC6H3-44323-00		REC6H3-44315-00	REC663-44366-00	REC90280-03M03	REC6H3-W0078-02
C75		1994-99	REC688-44352-03	REC688-44322-00	REC688-44323-00	REC688-44311-01	REC688-44315-00	REC663-44366-00	REC90280-04M04	REC692-W0078-02
E75		1995-00	REC688-44352-03		REC688-44323-00	REC688-44311-01	REC688-44315-00	REC663-44366-00	REC90280-04M04	REC692-W0078-02
P75		1996-99	REC688-44352-03	REC688-44322-00	REC688-44323-00	REC688-44311-01	REC688-44315-00	REC663-44366-00	REC90280-04M04	REC692-W0078-02
75CETO, TLR	67P1>67P9	2003-2011	REC688-44352-03	REC688-44322-00	REC688-44323-00	REC688-44311-01	REC688-44315-00	REC663-44366-00	REC90280-04M04	REC692-W0078-02
75CETO	67PA>67PE	2012-15	REC688-44352-03	REC688-44322-00	REC688-44323-00	REC688-44311-01	REC688-44315-00	REC663-44366-00	REC90280-04M04	REC692-W0078-02
75A, AE	692>6928 692A>692C	1997-07	REC688-44352-03	REC688-44322-00	REC688-44323-00	REC688-44311-01	REC688-44315-00	REC663-44366-00	REC90280-04M04	REC692-W0078-02
80A, AEO, AEM	6H0>6H01	1997-02	REC688-44352-03	REC688-44322-00	REC688-44323-00	REC688-44311-01	REC688-44315-00	REC663-44366-00	REC90280-04M04	REC692-W0078-02
C80		1997	REC688-44352-03	REC688-44322-00	REC688-44323-00	REC688-44311-01	REC688-44315-00	REC663-44366-00	REC90280-04M04	REC692-W0078-02
85A, AED, AET	688>6882	1997-03	REC688-44352-03	REC688-44322-00	REC688-44323-00	REC688-44311-01	REC688-44315-00	REC663-44366-00	REC90280-04M04	REC692-W0078-02
85A	688	1990	REC682-44352-01	REC682-44322-00	REC682-44323-40		REC682-44315-00	REC682-44365-00	REC90280-03024	REC682-W0078-A1
C85		1989-97	REC688-44352-03	REC688-44322-00	REC688-44323-00	REC688-44311-01	REC688-44315-00	REC663-44366-00	REC90280-04M04	REC692-W0078-02
CV85		1989-91	REC688-44352-03	REC688-44322-00	REC688-44323-00	REC688-44311-01	REC688-44315-00	REC663-44366-00	REC90280-04M04	REC692-W0078-02
90AEO	6H1	1992	REC682-44352-01	REC682-44322-00	REC682-44323-40		REC682-44315-00	REC682-44365-00	REC90280-03024	REC682-W0078-A1
90A, AE, TR, TLR, FE, BET	6H1>6H39 6H1A>6H3F 6H2C>6H2J	1997-15	REC688-44352-03	REC688-44322-00	REC688-44323-00	REC688-44311-01	REC688-44315-00	REC663-44366-00	REC90280-04M04	REC692-W0078-02
B90		1997-99	REC688-44352-03	REC688-44322-00	REC688-44323-00	REC688-44311-01	REC688-44315-00	REC663-44366-00	REC90280-04M04	REC692-W0078-02
C90		1997-01	REC688-44352-03	REC688-44322-00	REC688-44323-00	REC688-44311-01	REC688-44315-00	REC663-44366-00	REC90280-04M04	REC692-W0078-02
100A/ AETO	64W	1996	REC6E5-44352-01	REC61A-44322-02	REC6E5-44323-00-40	REC61A-44311-00	REC6E5-44315-A0	REC6E5-44366-00	REC90280-04M05	REC6N6-W0078-02
100A/ TLR	64W/ 64W0	1997-01	REC6E5-44352-01	REC6E5-44322-00	REC6E5-44323-00-40	REC6E5-44311-00	REC93210-86M38	REC6E5-44366-00	REC90280-04M05	REC6N6-W0078-02
115B/ BE	6E5/ 6E50/ 6E51	1998-02	REC6E5-44352-01	REC6E5-44322-00	REC6E5-44323-00-40	REC6E5-44311-00	REC93210-86M38	REC6E5-44366-00	REC90280-04M05	REC6N6-W0078-02
115B/ BE/ BETO	6,00E+005	1993-96	REC6E5-44352-01	REC61A-44322-02	REC6E5-44323-00-40	REC61A-44311-00	REC6E5-44315-A0	REC6E5-44366-00	REC90280-04M05	REC6N6-W0078-02
115BE	6E5	1997	REC6E5-44352-01	REC6E5-44322-00	REC6E5-44323-00-40	REC6E5-44311-00	REC93210-86M38	REC6E5-44366-00	REC90280-04M05	REC6N6-W0078-02
115C	6N6 6N61	2000-02	REC6E5-44352-01	REC6E5-44322-00	REC6E5-44323-00-40	REC6E5-44311-00	REC93210-86M38	REC6E5-44366-00	REC90280-04M05	REC6N6-W0078-02
115CEO/ CETO	6N6	1993-96	REC6E5-44352-01	REC61A-44322-02	REC6E5-44323-00-40	REC61A-44311-00	REC6E5-44315-A0	REC6E5-44366-00	REC90280-04M05	REC6N6-W0078-02
115CET/ CETO/ TR/ TLR	6N6-6N69 6N6A-6N6E	1997-13	REC6E5-44352-01	REC6E5-44322-00	REC6E5-44323-00-40	REC6E5-44311-00	REC93210-86M38	REC6E5-44366-00	REC90280-04M05	REC6N6-W0078-02
115TXRZ	6N60	2001	REC6E5-44352-01	REC6E5-44322-00	REC6E5-44323-00-40	REC6E5-44311-00	REC93210-86M38	REC6E5-44366-00	REC90280-04M05	REC6N6-W0078-02
C115-115TLR	6N6/6E5	1998-00	REC6E5-44352-01	REC6E5-44322-00	REC6E5-44323-00-40	REC6E5-44311-00	REC93210-86M38	REC6E5-44366-00	REC90280-04M05	REC6N6-W0078-02
C115		1991-92	REC6E5-44352-01	REC6E5-44322-00	REC6E5-44323-00-40	REC6E5-44311-00	REC93210-86M38	REC6E5-44366-00	REC90280-04M05	REC6N6-W0078-02
C115		1993-00	REC6E5-44352-01	REC61A-44322-02	REC6E5-44323-00-40	REC61A-44311-00	REC93210-86M38	REC6E5-44366-00	REC90280-04M05	REC6N6-W0078-02
P115	62A	1993-96	REC6E5-44352-01	REC61A-44322-02	REC6E5-44323-00-40	REC61A-44311-00	REC93210-86M38	REC6E5-44366-00	REC90280-04M05	REC6N6-W0078-02
115	6N6/6E5	1984-94	REC6E5-44352-01	REC61A-44322-02	REC6E5-44323-00-40	REC6E5-44311-00	REC93210-86M38	REC6E5-44366-00	REC90280-04M05	REC6N6-W0078-02
130 BETO	6N7/ 6N70/ 6N77	1997-07	REC6E5-44352-01	REC61A-44322-02	REC6E5-44323-00-40	REC6E5-44311-00	REC93210-86M38	REC6E5-44366-00	REC90280-04M05	REC6N6-W0078-02
130TLR	6N7	2000	REC6E5-44352-01	REC61A-44322-02	REC6E5-44323-00-40	REC6E5-44311-00	REC93210-86M38	REC6E5-44366-00	REC90280-04M05	REC6N6-W0078-02
L130BETO	6N4	1993-96	REC6E5-44352-01	REC61A-44322-02	REC6E5-44323-00-40	REC61A-44311-00	REC6E5-44315-A0	REC6E5-44366-00	REC90280-04M05	REC6N6-W0078-02

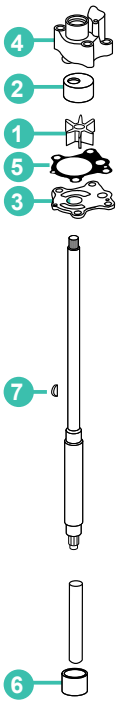

			1	2	3	4	5	6	7	KIT
L130BETO	6N4/6N40	1997-01	REC6E5-44352-01	REC61A-44322-02	REC6E5-44323-00-40	REC6E5-44311-00	REC93210-86M38	REC6E5-44366-00	REC90280-04M05	REC6N6-W0078-02
130	6L1/6N7	1988-92	REC6E5-44352-01	REC6E5-44322-00	REC6E5-44323-00-40	REC6E5-44311-00	REC93210-86M38	REC6E5-44366-00	REC90280-04M05	REC6N6-W0078-02
130 BETO	6N7	1993-96	REC6E5-44352-01	REC61A-44322-02	REC6E5-44323-00-40	REC61A-44311-00	REC6E5-44315-A0	REC6E5-44366-00	REC90280-04M05	REC6N6-W0078-02
130 / L130		1997-01	REC6E5-44352-01	REC61A-44322-02	REC6E5-44323-00-40	REC61A-44311-00	REC93210-86M38	REC6E5-44366-00	REC90280-04M05	REC6N6-W0078-02
130		2002-04	REC6E5-44352-01	REC61A-44322-02	REC6E5-44323-00-40	REC61A-44311-00	REC93210-86M38	REC6E5-44366-00	REC90280-04M05	REC6N6-W0078-02
L130	6L6/6N4	1989-92	REC6E5-44352-01	REC6E5-44322-00	REC6E5-44323-00-40	REC6E5-44311-00	REC93210-86M38	REC6E5-44366-00	REC90280-04M05	REC6N6-W0078-02
L130	6N4	1993-96	REC6E5-44352-01	REC61A-44322-02	REC6E5-44323-00-40	REC61A-44311-00	REC93210-86M38	REC6E5-44366-00	REC90280-04M05	REC6N6-W0078-02
L150CETO	6R2 / 6R0	1992-95	REC6E5-44352-01	REC61A-44322-02	REC6G5-44323-00	REC61A-44311-00	REC93210-86M38	REC6E5-44366-00	REC90280-04M05	REC61A-W0078-A1
D150H	65N0>65N1	2001-02	REC6E5-44352-01	REC61A-44322-02		REC61A-44311-00	REC93210-86M38	REC6E5-44366-00	REC90280-04M05	REC65N-W0078-A1
150F/ S150FETO	64C	1996	REC6E5-44352-01	REC6E5-44322-00	REC6E5-44323-00-40	REC6E5-44311-00	REC93210-86M38	REC6E5-44366-00	REC90280-04M05	REC6G5-W0078-A1
150	6R2	1992-09	REC6E5-44352-01	REC61A-44322-02	REC6G5-44323-00	REC61A-44311-00	REC93210-86M38	REC6E5-44366-00	REC90280-04M05	REC61A-W0078-A1
L150FETO	64G	1996	REC6E5-44352-01	REC6E5-44322-00	REC6E5-44323-00-40	REC6E5-44311-00	REC93210-86M38	REC6E5-44366-00	REC90280-04M05	REC6G5-W0078-A1
L150	6R0	1992-99	REC6E5-44352-01	REC61A-44322-02	REC6G5-44323-00	REC61A-44311-00	REC93210-86M38	REC6E5-44366-00	REC90280-04M05	REC61A-W0078-A1
P150		1986-91	REC6E5-44352-01	REC6E5-44322-00	REC6E5-44323-00-40	REC6E5-44311-00	REC93210-86M38	REC6E5-44366-00	REC90280-04M05	REC6G5-W0078-A1
P150		1992-99	REC6E5-44352-01	REC61A-44322-02	REC6G5-44323-00	REC61A-44311-00	REC93210-86M38	REC6E5-44366-00	REC90280-04M05	REC61A-W0078-A1
150/175/ 200ETLN		1984	REC6E5-44352-01	REC6E5-44322-00	REC6E5-44323-00-40	REC6E5-44311-00	REC93210-86M38	REC6E5-44366-00	REC90280-04M05	REC6G5-W0078-A1
PRO V150	6J9	1986-89	REC6E5-44352-01	REC6E5-44322-00	REC6E5-44323-00-40	REC6E5-44311-00	REC93210-86M38	REC6E5-44366-00	REC90280-04M05	REC6G5-W0078-A1
PRO V150	6N9	1990	REC6E5-44352-01	REC6E5-44322-00	REC6E5-44323-00-40	REC6E5-44311-00	REC93210-86M38	REC6E5-44366-00	REC90280-04M05	REC6G5-W0078-A1
PX150		1999	REC6E5-44352-01	REC61A-44322-02	REC6G5-44323-00	REC61A-44311-00	REC93210-86M38	REC6E5-44366-00	REC90280-04M05	REC61A-W0078-A1
SX150		1999-04	REC6E5-44352-01	REC61A-44322-02	REC6G5-44323-00	REC61A-44311-00	REC93210-86M38	REC6E5-44366-00	REC90280-04M05	REC61A-W0078-A1
V150		2000-08	REC6E5-44352-01	REC61A-44322-02	REC6G5-44323-00	REC61A-44311-00	REC93210-86M38	REC6E5-44366-00	REC90280-04M05	REC61A-W0078-A1
VZ150		2001-09	REC6E5-44352-01	REC61A-44322-02	REC6G5-44323-00	REC61A-44311-00	REC93210-86M38	REC6E5-44366-00	REC90280-04M05	REC61A-W0078-A1
Z150/ LZ150		2001-05	REC6E5-44352-01	REC61A-44322-02	REC6G5-44323-00	REC61A-44311-00	REC93210-86M38	REC6E5-44366-00	REC90280-04M05	REC61A-W0078-A1
175	6G5	1984-91	REC6E5-44352-01	REC6E5-44322-00	REC6E5-44323-00-40	REC6E5-44311-00	REC93210-86M38	REC6E5-44366-00	REC90280-04M05	REC6G5-W0078-A1
175 BETO	6R3	1992-95	REC6E5-44352-01	REC61A-44322-02	REC6G5-44323-00	REC61A-44311-00	REC93210-86M38	REC6E5-44366-00	REC90280-04M05	REC61A-W0078-A1
175 DETO	64D	1996	REC6E5-44352-01	REC61A-44322-02	REC6G5-44323-00	REC61A-44311-00	REC93210-86M38	REC6E5-44366-00	REC90280-04M05	REC61A-W0078-A1
P175	62H	1994-99	REC6E5-44352-01	REC61A-44322-02	REC6G5-44323-00	REC61A-44311-00	REC93210-86M38	REC6E5-44366-00	REC90280-04M05	REC61A-W0078-A1
VZ175		2001-09	REC6E5-44352-01	REC61A-44322-02	REC6G5-44323-00	REC61A-44311-00	REC93210-86M38	REC6E5-44366-00	REC90280-04M05	REC61A-W0078-A1
Z175		2001-05	REC6E5-44352-01	REC61A-44322-02	REC6G5-44323-00	REC61A-44311-00	REC93210-86M38	REC6E5-44366-00	REC90280-04M05	REC61A-W0078-A1
200G	64M	1996	REC6E5-44352-01	REC61A-44322-02	REC6G5-44323-00	REC61A-44311-00	REC93210-86M38	REC6E5-44366-00	REC90280-04M05	REC61A-W0078-A1
200 FETO	64E	1996	REC6E5-44352-01	REC61A-44322-02	REC6G5-44323-00	REC61A-44311-00	REC93210-86M38	REC6E5-44366-00	REC90280-04M05	REC61A-W0078-A1
200 CETO	61H	1992-93	REC6E5-44352-01	REC61A-44322-02	REC6G5-44323-00	REC61A-44311-00	REC93210-86M38	REC6E5-44366-00	REC90280-04M05	REC61A-W0078-A1
200	6G6/6R4	1984-91	REC6E5-44352-01	REC6E5-44322-00	REC6E5-44323-00-40	REC6E5-44311-00	REC93210-86M38	REC6E5-44366-00	REC90280-04M05	REC6G5-W0078-A1
200 BETO	6R4	1992-99	REC6E5-44352-01	REC61A-44322-02		REC61A-44311-00	REC93210-86M38	REC6E5-44366-00	REC90280-04M05	REC61A-W0078-A1
L200BETO	6R1	1992-95	REC6E5-44352-01	REC6E5-44322-00	REC6E5-44323-00-40	REC6E5-44311-00	REC93210-86M38	REC6E5-44366-00	REC90280-04M05	REC6G5-W0078-A1
L200 FETO	64H	1992-99	REC6E5-44352-01	REC61A-44322-02	REC6G5-44323-00	REC61A-44311-00	REC93210-86M38	REC6E5-44366-00	REC90280-04M05	REC61A-W0078-A1
LX200		1999-02	REC6E5-44352-01	REC61A-44322-02	REC6G5-44323-00	REC61A-44311-00	REC93210-86M38	REC6E5-44366-00	REC90280-04M05	REC61A-W0078-A1
P200		1991-99	REC6E5-44352-01	REC61A-44322-02	REC6G5-44323-00	REC61A-44311-00	REC93210-86M38	REC6E5-44366-00	REC90280-04M05	REC61A-W0078-A1
SX200		1999-05	REC6E5-44352-01	REC61A-44322-02	REC6G5-44323-00	REC61A-44311-00	REC93210-86M38	REC6E5-44366-00	REC90280-04M05	REC61A-W0078-A1
V200		1998-99	REC6E5-44352-01	REC61A-44322-02	REC6G5-44323-00	REC61A-44311-00	REC93210-86M38	REC6E5-44366-00	REC90280-04M05	REC61A-W0078-A1
VZ200		2001-04	REC6E5-44352-01	REC61A-44322-02	REC6G5-44323-00	REC61A-44311-00	REC93210-86M38	REC6E5-44366-00	REC90280-04M05	REC61A-W0078-A1
VZ200		2005-09	REC6E5-44352-01	REC61A-44322-02		REC61A-44311-00	REC93210-86M38	REC6E5-44366-00	REC90280-04M05	REC60X-W0078-00
Z200/ LZ200		2000-10	REC6E5-44352-01	REC61A-44322-02	REC6G5-44323-00	REC61A-44311-00	REC93210-86M38	REC6E5-44366-00	REC90280-04M05	REC61A-W0078-A1
V6 Special	6G7	1984-86	REC6E5-44352-01	REC6E5-44322-00	REC6E5-44323-00-40	REC6E5-44311-00	REC93210-86M38	REC6E5-44366-00	REC90280-04M05	REC6G5-W0078-A1
V6 Excel	6K7	1987-89	REC6E5-44352-01	REC6E5-44322-00	REC6E5-44323-00-40	REC6E5-44311-00	REC93210-86M38	REC6E5-44366-00	REC90280-04M05	REC6G5-W0078-A1
L225C/ CETO	62K	1994-95	REC6E5-44352-01	REC61A-44322-02	REC6G5-44323-00	REC61A-44311-00	REC93210-86M38	REC6E5-44366-00	REC90280-04M05	REC61A-W0078-A1
225 C	62J	1994-95	REC6E5-44352-01	REC61A-44322-02	REC6G5-44323-00	REC61A-44311-00	REC93210-86M38	REC6E5-44366-00	REC90280-04M05	REC61A-W0078-A1
225 DET / DETO	64F	1996	REC6E5-44352-01	REC61A-44322-02	REC6G5-44323-00	REC61A-44311-00	REC93210-86M38	REC6E5-44366-00	REC90280-04M05	REC61A-W0078-A1
225 BET / BETO	6R5	1991-95	REC6E5-44352-01	REC61A-44322-02	REC6G5-44323-00	REC61A-44311-00	REC93210-86M38	REC6E5-44366-00	REC90280-04M05	REC61A-W0078-A1
225 (2.6L)		1992-97	REC6E5-44352-01	REC61A-44322-02	REC6G5-44323-00	REC61A-44311-00	REC93210-86M38	REC6E5-44366-00	REC90280-04M05	REC61A-W0078-A1
225 L/S (3.1L)		1994-99	REC6E5-44352-01	REC61A-44322-02	REC6G5-44323-00	REC61A-44311-00	REC93210-86M38	REC6E5-44366-00	REC90280-04M05	REC61A-W0078-A1
LX225/ SX225		2000-03	REC6E5-44352-01	REC61A-44322-02	REC6G5-44323-00	REC61A-44311-00	REC93210-86M38	REC6E5-44366-00	REC90280-04M05	REC61A-W0078-A1
V225		1998-99	REC6E5-44352-01	REC61A-44322-02	REC6G5-44323-00	REC61A-44311-00	REC93210-86M38	REC6E5-44366-00	REC90280-04M05	REC61A-W0078-A1
VX225		2000-04	REC6E5-44352-01	REC61A-44322-02	REC6G5-44323-00	REC61A-44311-00	REC93210-86M38	REC6E5-44366-00	REC90280-04M05	REC61A-W0078-A1
VZ225		2003-09	REC6E5-44352-01	REC61A-44322-02		REC61A-44311-00	REC93210-86M38	REC6E5-44366-00	REC90280-04M05	REC60X-W0078-00
250AET/ AETO/ L250A	61A/61B	1990-96	REC6E5-44352-01	REC61A-44322-02	REC6G5-44323-00	REC61A-44311-00	REC93210-86M38	REC6E5-44366-00	REC90280-04M05	REC61A-W0078-A1
250 ETD	61A	1990	REC6E5-44352-01	REC61A-44322-02	REC6G5-44323-00	REC61A-44311-00	REC93210-86M38	REC6E5-44366-00	REC90280-04M05	REC61A-W0078-A1
250 B	61A	1995	REC6E5-44352-01	REC61A-44322-02	REC6G5-44323-00	REC61A-44311-00	REC93210-86M38	REC6E5-44366-00	REC90280-04M05	REC61A-W0078-A1
250/ L250		1990-96	REC6E5-44352-01	REC61A-44322-02	REC6G5-44323-00	REC61A-44311-00	REC93210-86M38	REC6E5-44366-00	REC90280-04M05	REC61A-W0078-A1
L250 /S250		1997-99	REC6E5-44352-01	REC61A-44322-02	REC6G5-44323-00	REC61A-44311-00	REC93210-86M38	REC6E5-44366-00	REC90280-04M05	REC61A-W0078-A1
VX250		2002-04	REC6E5-44352-01	REC61A-44322-02	REC6G5-44323-00	REC61A-44311-00	REC93210-86M38	REC6E5-44366-00	REC90280-04M05	REC61A-W0078-A1
VZ250		2003-09	REC6E5-44352-01	REC61A-44322-02		REC61A-44311-00	REC93210-86M38	REC6E5-44366-00	REC90280-04M05	REC60X-W0078-00
Z300 /LZ300		2006	REC6E5-44352-01	REC61A-44322-02		REC61A-44311-00	REC93210-86M38	REC6E5-44366-00	REC90280-04M05	REC61A-W0078-A1
VZ300		2004-09	REC6E5-44352-01	REC61A-44322-02		REC61A-44311-00	REC93210-86M38	REC6E5-44366-00	REC90280-04M05	REC60X-W0078-00
L/Z250DETOX	60V5/60W5	2007	REC6E5-44352-01	REC61A-44322-02	REC6P2-44323-00	REC61A-44311-00	REC93210-86M38	REC6E5-44365-00	REC90280-04M05	REC6P2-W0078-00
LZ/ Z300AETOX	6D04/6D14	2007	REC6E5-44352-01	REC61A-44322-02	REC6P2-44323-00	REC61A-44311-00	REC93210-86M38	REC6E5-44365-00	REC90280-04M05	REC6P2-W0078-00

ÁNODO ANODE ANODI ANODE

ZN	(KG)	AL	(KG)	OEM
CM15026	0,01	CM15026A	0,005	6E5-11325-00

100 -225 hp

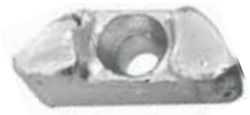

ZN	(KG)	OEM
CM6U4-45251-00	0,27	

Serie TD



ZN	(KG)	AL	(KG)	OEM
CM6G5-45251-01	0,91	CM6G5-45251-01A	0,37	6G5-45251-01

MALTA 2/4, 3.5 HP
2B/3, A/4, A/5C, 150/200 HP



ZN	(KG)	AL	(KG)	OEM
CM68V-11325-01	0,07	CM68V-11325-01A	0,03	68V-11325-01



ZN	(KG)	AL	(KG)	OEM
CM68T-45251-00	0,10	CM68T-45251-00A	0,04	68T-45251-00



ZN	(KG)	AL	(KG)	OEM
CM6E5-45251-00	0,14	CM6E5-45251-00A	0,05	



ZN	(KG)	AL	(KG)	OEM
CM6E0-45251-11	0,10	CM6E0-45251-11A	0,04	6E0-45251-11-00

40 hp



ZN	(KG)	AL	(KG)	OEM
CM67C-45251-00	0,12	CM67C-45251-00A		67C-45251-00



ZN	(KG)	AL	(KG)	OEM
CM3082523	0,03	CM689-11325-00A		689-11325-00



ZN	(KG)	AL	(KG)	OEM
CM6H1-45251-02	0,49	CM6H1-45251-02A	0,20	6H14525102

TOP 700



ZN	(KG)	OEM
CM41106-ZW000	0,03	41106-ZW-000

2-25 HP

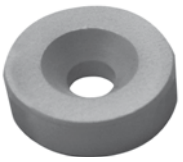

ZN	(KG)	AL	(KG)	OEM
CM688-45251-01	0,03	CM688-45251-01A	0,01	688-45251-01

Serie 2-115
60, 85, 115 HP



ZN	(KG)	AL	(KG)	OEM
CM6H1-45251-01	0,56	CM6H1-45251-01A		6H1-45251-01



ZN	(KG)	OEM
CM825171	0,29	

30-50 hp



ZN	(KG)	AL	(KG)	OEM
CM62Y-11325-00	0,02	CM62Y-11325-00A		62Y-11325-00

40-200 hp



RECAMBIOS MARINOS

ZN	(KG)	OEM
CM6G1-45251-03	0,17	6G1-45251-03 6GH-45251-00 6N0-WG525-00

6C - 6D - 8C



ZN	(KG)	OEM
CM42121	0,03	

6 - 9.9 hp

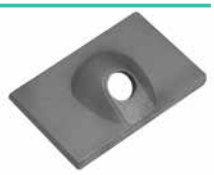

ZN	(KG)	OEM
CM6E8-45251-00	0,06	6E8-45251-00

9.9 hp



ZN	(KG)	OEM
CM6E8-45251-01	0,15	6E8-45251-02

9.9 - 15 hp



ZN	(KG)	OEM
CM6G8-45251-01	0,20	6G8-45251-00

9.9 hp



ZN	(KG)	OEM
CM66M-45371-00	0,08	66M-45371-00

9.9 hp - 4T



ZN	(KG)	AL	(KG)	OEM
CM6L5-45251-02	0,06	CM6L5-45251-02A	0,03	6L5-45251-02

3,5 hp



ZN	(KG)	AL	(KG)	OEM
CM15008	0,014	CM15008A	0,006	66M-11325-00

9.9hp



ZN	(KG)	OEM
CM6G1-45251-02	0,03	6G1-45251-02

6 - 8 hp



ZN	(KG)	OEM
CM6U0-45251-00	1,5	6U0-45251-00



ZN	(KG)	OEM
CM6T4-45836-00	1,44	6T4-45836-00

V8



ZN	(KG)	OEM
CM6T5-45373-00	1,07	6T545373-00

130 - 260 hp



ZN	(KG)	OEM
CM67F-11325-00	0,06	67F-11325-00

80 - 100 hp



ZN	(KG)	OEM
CM63D-45251-01	0,54	63D-45251-01



ZN	(KG)	AL	(KG)	OEM
CM6G8-11325-00	0,02	CM6G8-11325-00A		6G8-11325-00

2.5 - 9.0 hp



ZN	(KG)	OEM
CM6E5-45371-10	0,23	6E5-45371-10

60 - 225 hp



ZN	(KG)	AL	(KG)	OEM
CM82795M	0,19	CM82795MA	0,07	

25, 30 hp



ZN	(KG)	AL	(KG)	OEM
CM67C-45371-00	0,21	CM67C-45371-00A		67C-45371-00

F25 - F40 - F50 - F60

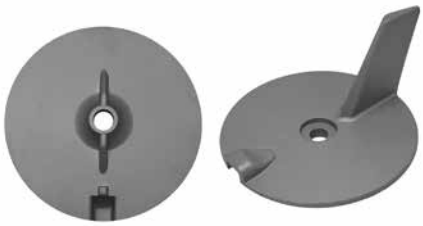

ZN	(KG)	AL	(KG)	OEM
CM688-45371-02	0,48	CM688-45371-02A	0,19	

60 -90 hp



ZN	(KG)	AL	(KG)	OEM
CM85007	0,01	CM85007A	0,004	688-11325-00

25-90 hp



ZN	(KG)	AL	(KG)	OEM
CM679-45251-00	0,56	CM679-45251-00A		679-45251-00

55 hp



ZN	(KG)	AL	(KG)	OEM
CM61A-45371	0,63	CM61A-45371-00A	0,25	61A-45371-00

250 hp



ZN	(KG)	AL	(KG)	OEM
CM6J9-45371-01	0,50	CM6J9-45371-01A	0,20	6J9-45371-01

150, 200 hp



ZN	(KG)	AL	(KG)	OEM
CM61N-45251-01	0,26	CM61N-45251-01A	0,10	61N-45251-01

4T, 9.9,/15F, 25 hp



ZN	(KG)	AL	(KG)	OEM
CM6K1-45371-02	0,50	CM6K1-45371-02A	0,21	6J9-45371-02

150, 200 hp

CONTRAROTACIÓN
COUNTERROTATION
CONTROROTANTE
CONTRE ROTATION



ZN	(KG)	AL	(KG)	OEM
CM664-45371-01	0,28	CM664-45371-01A	0,11	664-45371-01A

20, 25, 30 hp



ZN	(KG)	AL	(KG)	OEM
CM69L-45371-00	0,52	CM69L-45371-00A	0,21	69L-45371-00



ZN	(KG)	OEM
CM6T5-45371-00	0,52	6T5-45371-00

130 - 160 hp



ZN	(KG)	AL	(KG)	OEM
REC6E5-45371-01	0,42	CM6E5-45371-01A	0,17	6E5-45371-01

115 - 225 HP (V-4 - V6)



ZN	(KG)	AL	(KG)	OEM
CM6K1-45371-00	0,42	CM6K1-45371-00A	0,17	6K1-45371-00

115 - 225 HP (V-4 - V6)

CONTRAROTACIÓN
COUNTERROTATION
CONTROROTANTE
CONTRE ROTATION



new

ZN	(KG)	AL	(KG)	OEM
CM63P-11325-11		CM63P-11325-11A		63P-11325-11

150 - 300 hp

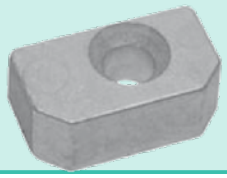

new

ZN	(KG)	AL	(KG)	OEM
CM67F-11325-01		CM67F-11325-01A		67F-11325-01

75 - 350 hp

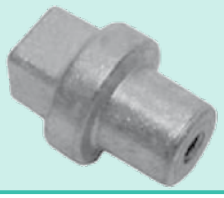

new

ZN	(KG)	AL	(KG)	OEM
CM67F-45371-00		CM67F-45371-00A		67F-45371-00

50 - 225 hp

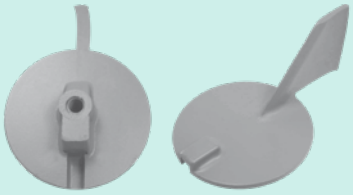

new

ZN	(KG)	AL	(KG)	OEM
CM6AW-45373-00		CM6AW-45373-00A		

300 - 350 hp



new

ZN	(KG)	AL	(KG)	OEM
CM6AW-45251-00		CM6AW-45251-00A		6AW-45251-00

200 - 350 hp



new

ZN	(KG)	AL	(KG)	OEM
CM6AW-45619-00		CM6AW-45619-00A		

300 - 350 hp



new

ZN	(KG)	AL	(KG)	OEM
CM6BL-11325-00		CM6BL-11325-00A		6BL-11325-00

BLOC
F20 / T,F25



new

ZN	(KG)	OEM
CM61A-11325-00		61A-11325-00

BLOC
V6



new

ZN	(KG)	AL	(KG)	OEM
CM63P-11325-01		CM63P-11325-01A		63P-11325-00 63P-11325-01

F150 - F350 (2004+)

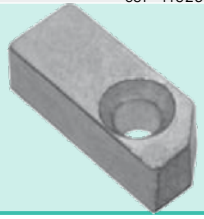

new

ZN	(KG)	AL	(KG)	OEM
CM68T-11325-00		CM68T-11325-00A		68T-11325-00

BLOC
6 - 300 hp



KITS DE ÁNODOS — ANODES KIT — KIT ANODI — KIT ANODES

new

AL	MG
CMY150KITA	CMY150KITM

150 - 200 hp



new

AL	MG
CMY200250KITA	CMY200250KITM

200 - 250 hp

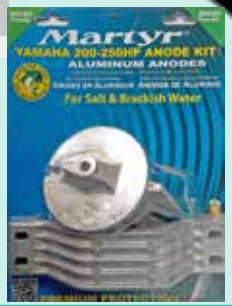

new

AL	MG
CMY150CRKITA	CMY150CRKITM

150, 200 hp

CONTRAROTACIÓN
COUNTERROTATION
CONTROROTANTE
CONTRE ROTATION



new

AL	MG
CMYHP200300KITA	CMY200300KITM

200 - 300 hp



new

AL	MG
CMY300350KITA	CMY300350KITM

300 - 350 hp



new

AL	MG
CMY4060KITA	CMY4060KITM

4T
40 - 60 hp



new

AL	MG
CMY300350XPKITA	CMY300350XPKITM

300 - 350 hp



new

AL	MG
CMY6090KITA	CMY6090KITM

60 -90 hp



new

AL	MG
CMY4050KITA	CMY4050KITM

40 - 50 hp



new

AL	MG
CMY80100KITA	CMY80100KITM

80 - 10 0 hp



ZN	OEM	KG (KG)
TEN01109		0,02

2 - 25 hp



ZN	OEM	KG (KG)
TEN01110	688-45251-01	0,04

60 - 85 - 115 hp



ZN	OEM	KG (KG)
TEN01111		0,210

Serie 2 - 115 hp
70 -85 hp



ZN	OEM	KG (KG)
TEN01165	63P-11325-21-00	0,03



ZN	OEM	KG (KG)
TEN01148	6G8-11325-00	0,01

2.5 - 9 hp



ZN	OEM	KG (KG)
TEN01149	62Y-11325-00	0,02

40- 200 hp



ZN	OEM	KG (KG)
TEN01150	6J8-11325-00	0,02

20- 25 hp



ZN	OEM	KG (KG)
TEN01168	61A-11325-00	0,02



ZN	OEM	KG (KG)
TEN01132	67C-45251-00 63D-45251-10	0,12

T25, F30, F40, F50, F60, hp



ZN	OEM	KG (KG)
TEN01142	68T-45251-00	0,10

F8C - 68T (2000) - 4T



ZN	OEM	KG (KG)
TEN01147	688-11325-00	0,01

25 - 90 hp



ZN	OEM	KG (KG)
TEN01152	6E5-11325-00	0,01

100 - 225 hp



ZN	OEM	KG (KG)
TEN01146	67F-11325-00	0,07

80 - 100 hp



ZN	OEM	KG (KG)
TEN01146-1	67F-11325-01	0,05

80 - 100 hp



ZN	OEM	KG (KG)
TEN01151	66M-11325-00	0,01

9.9 hp



ZN	OEM	KG (KG)
TEN01135	61N-45251-01	0,27

4T - 9,9 - 15F - 25 hp



ZN	OEM	(KG)
TEN01137	6G8-45251-00	0,20

9.9 hp



ZN	OEM	(KG)
TEN01138	6AV-45251-00 6V3-45251-01	0,28

TD



ZN	OEM	(KG)
TEN01123	6E0-45251-11-00 65W-45251-00	0,10

40 hp



ZN	OEM	(KG)
TEN01105	6E5-45251-00	0,15

115 - 225 hp



ZN	OEM	(KG)
TEN01106	6E8-45251-00	0,045

9.9 hp



ZN	OEM	(KG)
TEN01116	6E8-45251-02	0,14

9.9 - 15 hp



ZN	OEM	(KG)
TEN01136	66M-45371-00	0,09

9.9 4T hp



ZN	OEM	(KG)
TEN01153	6E5-45371-00	0,337

60 - 225 hp



ZN	OEM	(KG)
TEN01118	6G1-45251-03	0,175

6C - 6D - 8C HP



ZN	OEM	(KG)
TEN01122	6T4-45836-00	1,49

V8



ZN	OEM	(KG)
TEN01100	664-45371-01	0,21

20 - 25 - 30 HP



ZN	OEM	(KG)
TEN01101	679-45371-00	0,46

55 HP 10x1,25



ZN	OEM	(KG)
TEN01102		0,62

55 HP 10x1,25



ZN	OEM	(KG)
TEN01103	6L6-45371-00	0,39

115 - 225 HP
V4 - V6



ZN	OEM	(KG)
TEN01104	688-45371-02	0,43

60 - 90 hp



ZN	OEM	(KG)
TEN01119	6T5-45371-00	0,58

130 - 205 - 230 - 260 hp



ZN	OEM	(KG)
TEN01124	61A-45371-00	0,68

250A hp



ZN	OEM	(KG)
TEN01130		0,27

25 - 30 hp



ZN		OEM	(KG)
TEN01133	DX220	6J9-45371-01	0,63
TEN01134	SX220	6K1-45371-02	0,63

150 - 200 HP



ZN	OEM	(KG)
TEN01140	67F-45371-00	0,40

80 - 100 HP 4T



ZN	OEM	(KG)
TEN01141	67F-45371-00	0,22

F40 - F50 - F60 4T



ZN	OEM	(KG)
TEN01143	6J9-45371-00	0,56

150 - 225 HP



ZN	OEM	(KG)
TEN01131	63D-45251-00 63D-45251-01	0,57

H.C. 48



AL	OEM	(KG)
TEN01154AL	6AH-45251-00	0,69



ZN	OEM	(KG)
TEN01129	6E5-45251-00	0,24

75 HP - XR6



ZN	OEM	(KG)
TEN01157	6U0-45251-00	1,50

TD



ZN	OEM	(KG)
TEN01107		0,03

9.9 hp



ZN	OEM	(KG)
TEN01108	6G1-45251-02	0,04

6 - 8 hp



ZN	OEM	(KG)
TEN01169	6AW-45619-00	0,30



AL	OEM	(KG)
TEN01155AL	6AW-45373-00	1,05



ZN	OEM	(KG)
TEN01158	6U4-45373-00	0,33



ZN	OEM	(KG)
TEN01117	6L5-45251-02	0.07

Malta 3,5 HP
+ 2B - 3A - 4A - 5C



ZN	OEM	Ø (mm)	(KG)
TEN01127	676-45251-00	20	0,02
TEN01128	682-45251-00	24	0,02



ZN	OEM	(KG)
TEN01161	6BL-11325-00	0,02



ZN	OEM	(KG)
TEN01163	68T-11325-00	0,02



ZN	OEM	(KG)
TEN01112	6G5-45251-01 6G5-45251-02	0,90



ZN	OEM	(KG)
TEN01113	6H1-45251-03	0,55

60 - 90 hp



ZN	OEM	(KG)
TEN01112-1	6AW-45251	0,65

200 - 350 hp



ZN	OEM	(KG)
TEN01162	682-11325-00	0,02



ZN	OEM	(KG)
TEN01164	63P-11325-11-00	0,02



ZN	OEM	(KG)
TEN01166	676-11325-00	0,03



ZN	OEM	(KG)
TEN01167	63P-11325-01-00	0,02



ZN	OEM	(KG)
TEN01115	6H1-45251-02	0,46

TOP 700



ZN	OEM	(KG)
TEN01125	6H1-45251-01	1,20

150 - 200 hp



ZN	OEM	(KG)
TEN01120	6T5-45373-00	0,77

130 - 205 - 230 - 260 hp



ZN	OEM	(KG)
TEN01126		0,29

30 - 40 hp



ZN	OEM	(KG)
TEN01159	6U4-45251-00	0,60



ZN	OEM	(KG)
TEN01121	689-11325-00	0,02

W30 - W8 25/2/3 hp



ZN	OEM	(KG)
TEN01160T	N51-11325-01	0,60



ZN	OEM	(KG)
TEN01156	68V-11325-02	0,03



ZN	OEM	(KG)
TEN01156-1	68V-11325-01	0,07



ZN	OEM	(KG)	Ø (mm)	(mm)	
TEN01114		0,09	20	39	M8



ZN	OEM	(KG)
TEN01139	6T5-45251-00	0,35



new

ZN	OEM	(KG)	Ø (mm)	(mm)
TEN01170	6AW-1132S-00	0,035	14	40
TEN01171	6AQ-1132N-00	0,030	14	38

300 - 350 hp



new

ZN	OEM	(KG)	Ø (mm)	(mm)
TEN01172	6AW-1132R-00	0,022	16	20

300 - 350 hp



new

ZN	OEM	(KG)	Ø (mm)	(mm)
TEN01173	6AW-1132L-00	0,026	19	15

300 - 350 hp



new

ZN	OEM	(KG)
TEN01174	6AW-1132U-00	0,06

300 - 350 hp

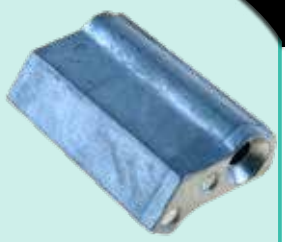

new

ZN	OEM	(KG)
TEN01175	6AW-1132T-00	0,06

300 - 350 hp

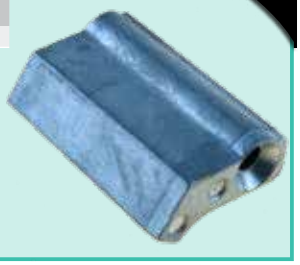

new

ZN	OEM	(KG)
TEN01176	6AW-1132M-00	0,12

300 - 350 hp



new

ZN	OEM	(KG)
TEN01177	6AW-1132P-00	0,034

300 - 350 hp

ZN	OEM	(KG)
TEN01145	69L-45371-00	0,66



ZN	OEM	(KG)
TEN01144	6K1-45371-00	0,41



KITS DE ÁNODOS — ANODES KIT — KIT DE ANODI — KIT ANODES

new

ZN
TENKITYAMAHA150-200

150 - 200 hp



new

ZN
TENKITYAMAHA200-300

200 - 300 hp



new

ZN
TENKITYAMAHA150-200C

150, 200 hp

CONTRAROTACIÓN
COUNTERROTATION
CONTROROTANTE
CONTRE ROTATION



new

ZN
TENKITYAMAHA40-60

40 - 60 hp



new

ZN
TENKITYAMAHA200-250

200 - 250 hp



new

ZN
TENKITYAMAHA60-90

60 - 90 hp



TAPA DE ÁNODO (66M) — COVER ANODE (66M) — COPERCHIO ANODO (66M) — COUVERCLE DU ANODE (66M)

new

REF	OEM
PAF15-07010011	66M-11327-00-94



GUÍA DE ÁNODOS | ANODES APPLICATION | GUIDA ANODI | GUIDE DES ANODES

	OEM	TECNOSEAL ZN	CANADA METAL ZN	CANADA METAL AL
CILINDRO | CYLINDER | CILINDRO | MOTEURS				
F2.5A, 2B, 3A, F4A, 4A, 5C (1989+), F4B, F5A, F6C	6L5-45251-03	TEN01117	CM6L5-45251-02	CM6L5-45251-02A
4A, 5C (-1989), F8A/B, F9.9A/B	677-45251-00	TEN01109	CM43107M	
4A, 5C, F8A/B/, 6C/D, 8C, F9.9A/B(1989+), 9.9D, 15/	6E0-45251-12	TEN01123	CM6E0-45251-11	CM6E0-45251-11A
6C/D, 8C (1990+)	6GH-45251-00	TEN01118	CM6G1-45251-03	
6C/D, 8C (-1989)	6N0-WG525-00	TEN01108	CM6G1-45251-02	
F6A/B, F8C, F9.9F, F9.9J	68T-45251-00	TEN01142	CM68T-45251-00	CM68T-45251-00A
F8A/B, 9.9D, F9.9B, 15D, F9.9A(-1994)	6E8-45251-02	TEN01116	CM6E8-45251-01	
F9.9A, FT9.9A (1994+)	6G8-45251-01	TEN01137	CM6G8-45251-01	
FT8, 9.9F, F9.9C, FT9.9D, FT9.9G, FT9.9L, 15F, F15A, F20A, F25A, 25B/V, F25D, 30G/H, 40V/X,-F30A, F40A/B/C, F50A/F, 50H, FT25B/C (2000+)	61N-45251-01	TEN01135	CM61N-45251-01	CM61N-45251-01A
F15C, F20B	6AH-45251-00	TEN01154		
FT25F, F30B, F40F, F60A/C, FT60B, 40V/X, 50H, F40A, F50A/B(-1999), F50H, F60F	67C-45251-00	TEN01132	CM67C-45251-00	
F25G	6G8-45251-01	TEN01148	CM6G8-11325-00	
F50H, F60F, FT50J, FT60G	65W-45251-00	TEN01123	CM6E0-45251-11	CM6E0-45251-11A
F(L)300A, F(L)350A	6AW-45373-00	TEN01155	CM6AW-45373-00	CM6AW-45373-00A
TRIM				
F9.9C, F15A	66M-45371-00	TEN01136	CM66M-45371-00	
40Q, 50G, 55B, PRO50	679-45371-00	TEN01101		
20C/D, 25D/N, 30A/D, 40H/V/X, 50D/H, F40A, F45A, F50A(-2000)	664-45371-01	TEN01100	CM664-45371-01	CM664-45371-01A
FT25B/C, F30A, FT25F, F25G, F30B, F40F, F40A/B/C, F50A/F, F50H, F60A/C, F60F	67C-45371-00	TEN01141	CM67C-45371-00	CM67C-45371-00A
60F, 70B, 75A/C, PRO75, 80A, 85A, 90A, FT50B(-2000), FTC/G, FT50J, FT60B/D, FT60G, F70A, F80A/B, F100A/D	67F-45371-00	TEN01104	CM688-45371-02	CM688-45371-02A
100A, 115A/B/C, 130B, 140A/B, F100B/F, F115A/B, 150A, 175A, 200A, PROV100	6E5-45371-01	TEN01103	REC6E5-45371-01	CM6E5-45371-01A
150A, 175A, 200A(1998+), 150C/F, 175B/D, 200B/F/G, 225A/B/D/F, PROV200, F150A, Z150P/Q, Z175G/H, Z200N, F200F, F(L)200G	6J9-45371-01	TEN01133	CM6J9-45371-01	CM6J9-45371-01A
150A, 175A, 200A	6K1-45371-00	TEN01144	CM6K1-45371-00	CM6K1-45371-00A
LF150A, L150C/F, L200B/F, LZ150P, LZ200N	6K1-45371-02	TEN01134	CM6K1-45371-02	CM6K1-45371-02A
FL115A, FL115B, L130B, L140B	6L6-45371-00	TEN01103	REC6E5-45371-01	CM6E5-45371-01A
(L)225C/G, (L)250A/B, F(L)200A, F(L)200C, F(L)225A, F(L)225B, F(L)250A, F(L)250B, F(L)225F, F(L)250C, F(L)300B	61A-45371-00	TEN01124	CM61A-45371	CM61A-45371-00A
Z200P, (L)Z250D/F, (L)Z300A	69L-45371-00	TEN01145	CM69L-45371-00	CM69L-45371-00A
BRACKET				
FT8D, FT9.9D, F15A/C, F20A/B, F25A/G(PT model), FT25B, F30A, 30D, F40B/C, 40X/V, FT50C, 50H, F60A, FT60B, F70A	65W-45251-00	TEN01123	CM6E0-45251-11	CM6E0-45251-11A
25B/Q, 40H, 50D/G, 55B, 60F, 70B, 75A/C, 80A, 85A, 90A, F80A/B, F100A/D, F(L)115B, PRO50/75 (1990+)	6H1-45251-03	TEN01115	CM6H1-45251-02	CM6H1-45251-02A
40H, 50D, 60F, 70B, 80A, 90A(1989+)	99999-03935	TEN01113	CM6H1-45251-01	
40H, 50D, 60F, 70B, 80A, 90A(-1989)	688-45251-01	TEN01110	CM688-45251-01	CM688-45251-01A
25B, FT25B, F30A, 40V, F40A/B, F45A, FT50A/B, 50G/H, PRO50, 55B, 60F, 70B	663-45251-00	TEN01110	CM688-45251-01	CM688-45251-01A
40V, F40A, F45A, 50H, F50A, FT50B	63D-45251-01	TEN01131	CM63D-45251-01	CM63D-45251-01A
115A, 140A, 150A, 175A, 200A, 220A	6E5-45251-00	TEN01105	CM6E5-45251-00	CM6E5-45251-00A
100A, 115B/C, F(L)115A, (L)130B, (L)140B	6G5-45251-02	TEN01112	CM6G5-45251-01	CM6G5-45251-01A
PROV100, 150, 200, Vmax	6AW-45251-00	TEN01112-1	CM6AW-45251-00	CM6AW-45251-00A
(L)F150A, (L)150A/C/F, 175A/B/D/F	6AW-45251-00	TEN01112-1	CM6AW-45251-00	CM6AW-45251-00A
(L)200A/B/F/G, (L)225A/B/C/D/G, (L)250A/B	6AW-45251-00	TEN01112-1	CM6AW-45251-00	CM6AW-45251-00A
(L)Z150P/Q, Z175G/H/(L), Z200N/P	6AW-45251-00	TEN01112-1	CM6AW-45251-00	CM6AW-45251-00A
Z250D/F, F(L)200A, F200B, F(L)200C	6AW-45251-00	TEN01112-1	CM6AW-45251-00	CM6AW-45251-00A
F(L)225A, F(L)225B, F225C, F(L)250A	6AW-45251-00	TEN01112-1	CM6AW-45251-00	CM6AW-45251-00A
F(L)250B, (L)Z300A, F(L)300A, F(L)350A	6AW-45251-00	TEN01112-1	CM6AW-45251-00	CM6AW-45251-00A
F(L)225F, F(L)250D, F(L)300B	6AW-45251-00	TEN01112-1	CM6AW-45251-00	CM6AW-45251-00A
F(L)200F, F(L)200G	6AW-45251-00	TEN01112-1	CM6AW-45251-00	CM6AW-45251-00A
F300A, F350A (V8)				
TAPA TERMOSTATO | THERMOSTAT COVER COPERCHIO TERMOSTATO | COUVERCLE DU THERMOSTAT	6AW-1132R-00	TEN01172		
PARA REGULADOR | FOR REGULATOR | PER REGOLATORE | POUR REGULATEUR	6E5-11325-00	TEN01152	CM15026	CM15026A
BLOQUE | BLOCK | BLOCCO | MOTEUR	6AW-1132P-00	TEN01177		
BLOQUE | BLOCK | BLOCCO | BLOQUE	63P-11325-01	TEN01167	CM63P-11325-01	
TAPA ESCAPE | EXHAUST COVER | COPERCHIO SCARICO | PLAQUE D'ECHAPPEMENT	6AW-1132M-00	TEN01176		
ESCAPE | EXHAUST | SCARICO | ECHAPPEMENT	99999-03946	TEN01171		
ESCAPE | EXHAUST | SCARICO | ECHAPPEMENT	6AW-1132L-00	TEN01173		
PLACA ESCAPE | EXHAUST PLATE | PIASTRA SCARICO | PLAQUE D'ECHAPPEMENT	6AW-1132T-00	TEN01175		
PLACA ESCAPE | EXHAUST PLATE | PIASTRA SCARICO | PLAQUE D'ECHAPPEMENT	6AW-1132S-00	TEN01170		
ANODO PLACA ESCAPE	63P-11325-11	TEN01164	CM63P-11325-11	
COLAS (DIESEL) | STERN DRIVE (DIESEL) | PIEDI (DIESEL) | EMBASE (DIESEL)				
Intermedio | Intermediate | Intermedio | Intermediaire - ME422	6U0-45251-00	TEN01157	CM6U0-45251-00	
TRP Drive (Trasero | Rear | Posteriore | Arrière - ME422	6U4-45251-00	TEN01159	CM6U4-45251-00	
TRP Drive (Frontal | Front | Anteriore | Avant - ME422	6U4-45373-00	TEN01158		

4T STROKES F2.5 AMH/MLH/MSH/MHA (2003+)

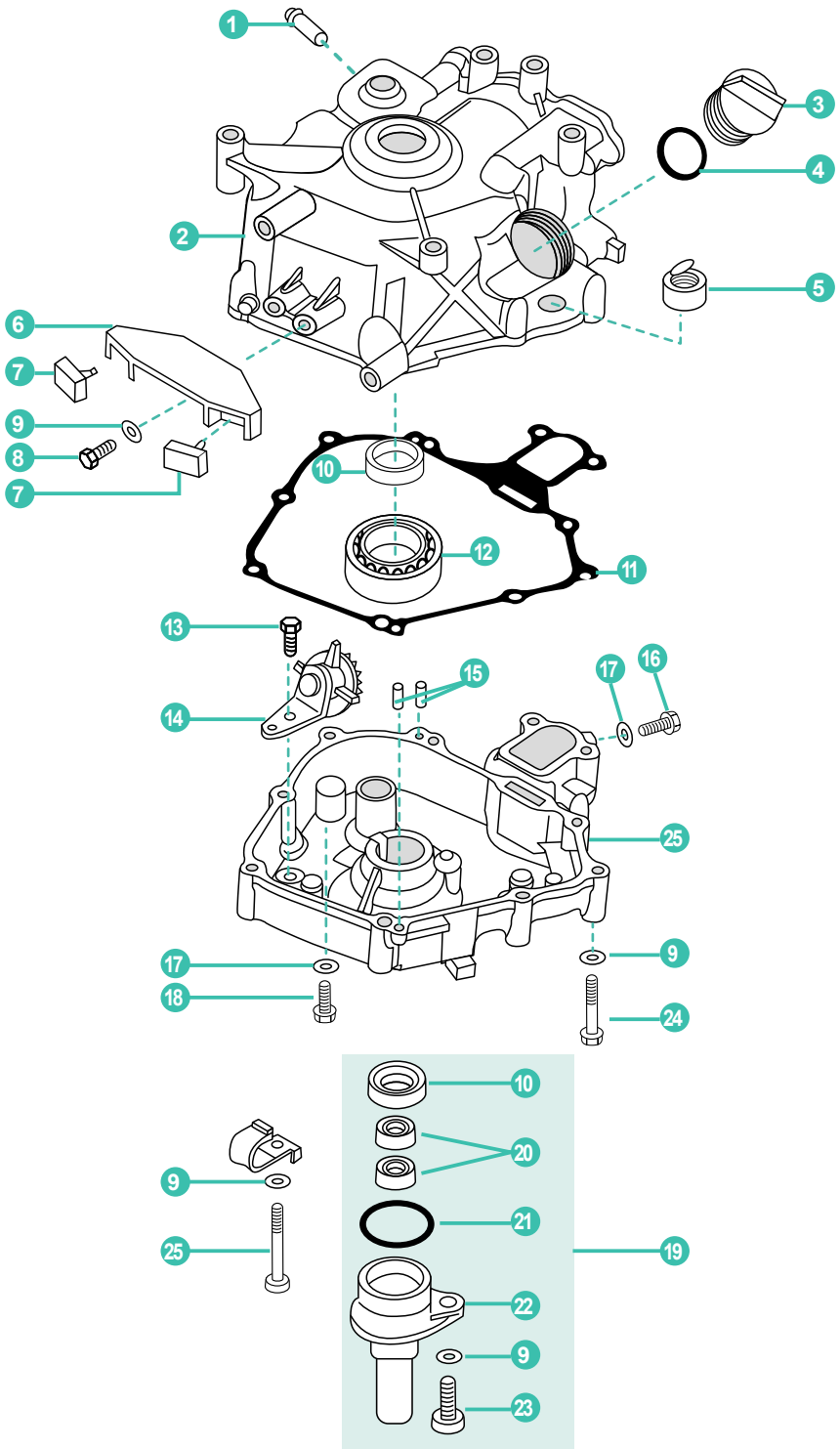

	REF	OEM					UN.
1	PAT15-04010202	6H1-14485-00	PIPA DE AGUA	PIPE, WATER	TUBO	RACCORD TUYAU D'EAU	1
2	PAF2.6-04010100	69M-E1311-00-1	CARCASA MOTOR	CRANK CASE	COPERCHIO MOTORE	VILEBREQUIN	1
3	PAF15-07050004	69M-E5363-00	TAPÓN ACEITE	PLUG, OIL	TAPPO OLIO	BOUCHON REMPLISSAGE D'HUILE	1
4	PAJASOF40431-025	93210-24M79	ARO TÓRICO	O-RING	O-RING	JOINT TORIQUE	1
5	PAF2.6-04010102	69M-15361-00	INDICADOR NIVEL	GAUGE, LEVEL	INDICATORE LIVELLO	JAUGE DE NIVEAU	1
6	PAF2.6-04000008	69M-G2743-00	SOPORTE MOTOR	BRACKET, DAMPER	SUPPORTO MOTORE	SUPPORT	1
7	PAF2.6-04000009	6G8-44532-00	GOMA SOPORTE	RUBBER BLOCK, DAMPER	GOMMA SUPPORTO	SILENT BLOC	2
8	PAGB/T5783-M6X20	97095-06020	TORNILLO	SCREW	VITE	VIS	2
9	PAGB/T97.1-6	92995-06600	ARANDELA	WASHER	RONDELLA	RONDELLE	11
10	PAF2.6-04010001	93102-20108	RETÉN	OIL SEAL	PARAOLIO	JOINT	2
11	PAF2.6-04000004	69M-11351-A0	JUNTA CÁRTER	CRANK CASE COMPLEX GASKET	GUARNIZIONE COPPA L'OLLIO	JOINT DE CARTER	1
12	PAGB/T276-62/22/P6	93306-272Y2	RODAMIENTO	BALL BEARING	CUSCINETTO	ROULEMENT À BILLE	1
13	PAGB/T5783-M6X12	95817-06012	TORNILLO	SCREW	VITE	VIS	1
14	PAF2.6-04050100	69M-E3102-00	PIÑÓN	GEAR UNIT ASSY	PIGNONE	PIGNON	1
15	PAF15-00000013	93604-12M07	PIN	PIN	SPINOTTO	GOUPILLE FENDUE	2
16	PAGB/T5783-M8X14	97095-08014	TORNILLO	SCREW	VITE	VIS	1
17	PAF4-04000006	90201-08818-00	ARANDELA	WASHER	RONDELLA	RONDELLE	2
18	PAF4-04000001	90105-08M76	TORNILLO DRENAJE	BOLT, DISCHARGING OIL	VITE DRENAGGIO	VIS DE VIDANGE	1
19	PAF2.6-04060000	69M-E5396-00-5B	RETÉN Y CUERPO, COMPLETO	OIL SEAL SHELL ASSY	GUARNIZIONE E CORPO COMPLETO	LOGEMENT JOINT D'HUILE, COMPLÈTE	1
20	PAF2.6-04060002	93210-09004	RETÉN	OIL SEAL	PARAOLIO	JOINT	2
21	PAF4-04060002	93210-35537	ARO TÓRICO	O RING	O-RING	JOINT TORIQUE	1
22	PAF2.6-04060001	69M-E5396-00	CUERPO DEL RETÉN	SHELL, OIL SEAL	GUARNIZIONE CORPO	LOGEMENT JOINT D'HUILE	1
23	PAGB/T5783-M5X12	90465-08M99	TORNILLO	SCREW	VITE	VIS	1
24	PAGB/T5783-M5X12	97013-06045	TORNILLO	SCREW	VITE	VIS	8
25	PAF2.6-04050001	69M-E5111-00-1S	CARTER	CRANKCASE COVER	CARTER	CARTER	1



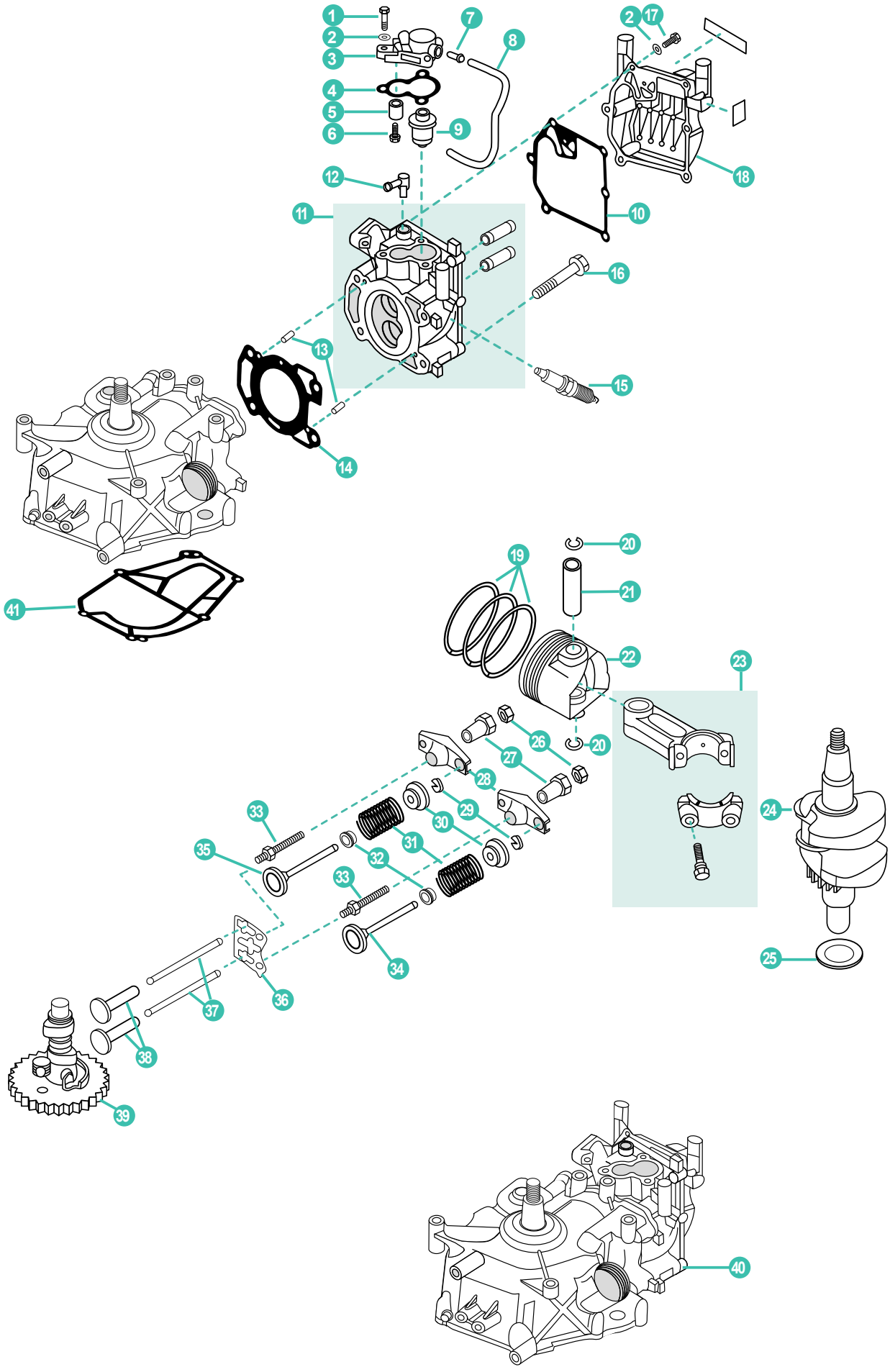
1
2
3
4
5
6
7
8
9
10
11
12
13
14
15
16
17
18
19
20
21
22
23
24
25
26
27
28
29
30
31
32
33
34
35
36
37
38
39
40
41

	REF	OEM					UN.
1	PAGB/T5783-M6X20	97095-06020	TORNILLO	SCREW	VITE	VIS	3
2	PAGB/T97.1-6	92995-06600	ARANDELA	WASHER	RONDELLA	RONDELLE	9
3	PAF2.6-04000501	69M-E2413-00-1S	TAPA TERMOSTATO	COVER, THERMOSTAT	COPERCHIO TERMOSTATO	COUVERCLE THERMOSTAT	1
4	PAF4-04000011	68D-E2414-A0	JUNTA TAPA TERMOSTATO	GASKET, THERMOSTAT COVER	GUARNIZIONE COPERCHIO TERMOSTATO	JOINT COUVERCLE DE THERMOSTAT	1
5	PAF4-04070003	68D-E1325-00	ÁNODO	ANODE	ANODO	ANODE	1
6	PAGB/T818-M5X25	97880-05025	TORNILLO	SCREW	VITE	VIS	1
7	PAF4-04010102	650-24378-00	PIPA	PIPE, JOINT	TUBO	RACCORD TUYAU D'EAU	1
8	PAF2.6-04000007	90445-09808	TUBO DE AGUA	WATER TUBE	TUBO DELL'ACQUA	DURITE D'EAU	1
9	REC6AH-12411-00	69M-12411-01	TERMOSTATO	THERMOSTAT	TERMOSTATO	THERMOSTAT	1
10	PAF2.6-04000005	69M-11193-A0	JUNTA TAPA BALANCINES	GASKET, CYLINDER COVER	GUARNIZIONE COPERCHIO PUNTERIE	JOINT DE CACHE CULBUTEUR	1
11	PAF2.6-04040100	69M-E1111-00-1S	CULATA COMPLETA	CYLINDER HEAD ASSY	TESTATA COMPLETA	CULASSE COMPLETE	1
12	PAF15-04000005	676-11372-00	NIPLE	NIPPLE	TUBO	RACCORD D'EAU	1
13	PAF15-00000013	93604-12M07	PIN	PIN, DOWEL	SPINOTTO	GOUPILLE FENDUE	2
14	PAF2.6-04000001	69M-11181-00	JUNTA CULATA	GASKET, CYLINDER HEAD	GUARNIZIONE TESTATA	JOINT DE CULASSE	1
15	NGKBR6HS	94702-00248	BUJÍA **F2.5A**	SPARK PLUG **F2.5A**	CANDELA **F2.5A**	BOUGIE **F2.5A**	1
	NGKCR6HSB	94702-00372	BUJÍA **F2.5B**	SPARK PLUG **F2.5B**	CANDELA **F2.5B**	BOUGIE **F2.5B**	1
16	PAF4-04000034	90105-08M36	TORNILLO	SCREW	VITE	VIS	4
17	PAGB/T5783-M6X16	90105-06039	TORNILLO	SCREW	VITE	VIS	6
18	PAF2.6-04000006	69M-E1191-00-1S	TAPA BALANCINES	COVER, CYLINDER HEAD	COPERCHIO PUNTERIE	CACHE CULBUTEUR	1
19	REC69M-E1603-01	69M-E1603-01	KIT SEGMENTOS	PISTON RING KIT	KIT FASCIA	KIT DE SEGMENTS	1
20	PAF2.6-04020006	93450-13130	CIRCLIP	CIRCLIP	CIRCLIP	CIRCLIP	2
21	PAF2.6-04020005	69M-E1633-00	PIN, PISTÓN	PIN, PISTON	SPINOTTO PISTONE	AXE DE PISTON	1
22	PAF2.6-04020001	69M-E1631-01-96	PISTÓN	PISTON	PISTONE	PISTON	1
23	PAF2.6-04020100	69M-11650-00	BIELA	ROD, CONNECTING	BIELLA	BIELLE	1
24	PAF2.6-04030000	69M-11400-00	CIGÜEÑAL	CRANK ASSY	ALBERO MOTORE	VILEBREQUIN	1
25	PAF2.6-04000003	90201-23008	ARANDELA	WASHER	RONDELLA	RONDELLE	1
26	PA166F-010011	7FK-12158-00	TUERCA	LOCK NUT	DADO	ÉCROU	2
27	PA166F-010010	7FK-12165-00	TUERCA BALANCÍN	PIVOT, ROCKER ARM	DADO BILANCERE	PIVOT CULBUTEUR	2
28	PA166F-010009	67D-12151-00	BALANCÍN	ARM, VALVE ROCKER	BILANCERE	CULBUTEUR	2
29	PAF8-05030007	7NJ-12118-00	SEGURO DE VÁLVULA	CLAMP, VALVE	BLOCCAGGIO DI VALVOLA	CLAVETTE DE SOUPAPE	2
30	PAF8-05030006	7NJ-12117-00	RETÉN DE RESORTE	SPRING, VALVE RETAINER	VALVOLA DI RITEGNO	JOINT DE RESSORT	2
31	PAF4-04080008	68D-E2113-00	MUELLE DE VÁLVULA	SPRING, VALVE STEM	MOLLA DI VALVOLA	RESSORT DE SOUPAPE	2
32	PA166F-010003	51Y-12119-00	RETÉN DE VÁLVULA	SEAT, VALVE STEM	TENUTA	JOINT QUEUE DE SOUPAPE	
33	PA166F-010008	67D-12157-00	TORNILLO BALANCÍN	BOLT, ROCKER ARM	VITE PUNTERIE	VIS DE BRAS A BASCULE	2
34	PA166F-010001	67D-12111-00	VÁLVULA ADMISIÓN	VALVE, INTAKE	VALVOLA ASPIRAZIONE	SOUPAPE D ADMISSION	1
35	PA166F-010002	67D-12121-00	VÁLVULA ESCAPE	VALVE, EXHAUST	VALVOLA SCARICO	SOUPAPE D'ECHAPPEMENT	1
36	PAF2.6-04040001	69M-E2155-00	PLETINA EMPUJADORES	PLATE, PUSH ROD	PIASTRA, ASTA DI SPINTA	PLAQUE DE POUSSOIRS	1
37	PAF2.6-04000002	69M-12154-00	VARILLA EMPUJADOR	ROD, VALVE PUSH	ASTICELLA DI SPINTA	TIGE DE CULBUTEUR	2
38	PA166F-000001	JA9-12153-00	EMPUJADOR	LIFTER, VALVE	ASTA	POUSSOIR	2
39	PAF2.6-04000100	69M-12170-01	ÁRBOL DE LEVAS	CAMSHAFT ASSY	ALBERO A CAMME	ARBRE À CAMES	1
40	POWERHEAD2.6	69M-WE0090-01-1S	MOTOR	POWER HEAD	MOTORE	TÊTE MOTRICE	1
41	PAF2.6-00000003	69M-45113-A0	JUNTA BASE MOTOR	GASKET ENGINE	GUARNIZIONE BASE MOTORE	JOINT MOTEUR	1

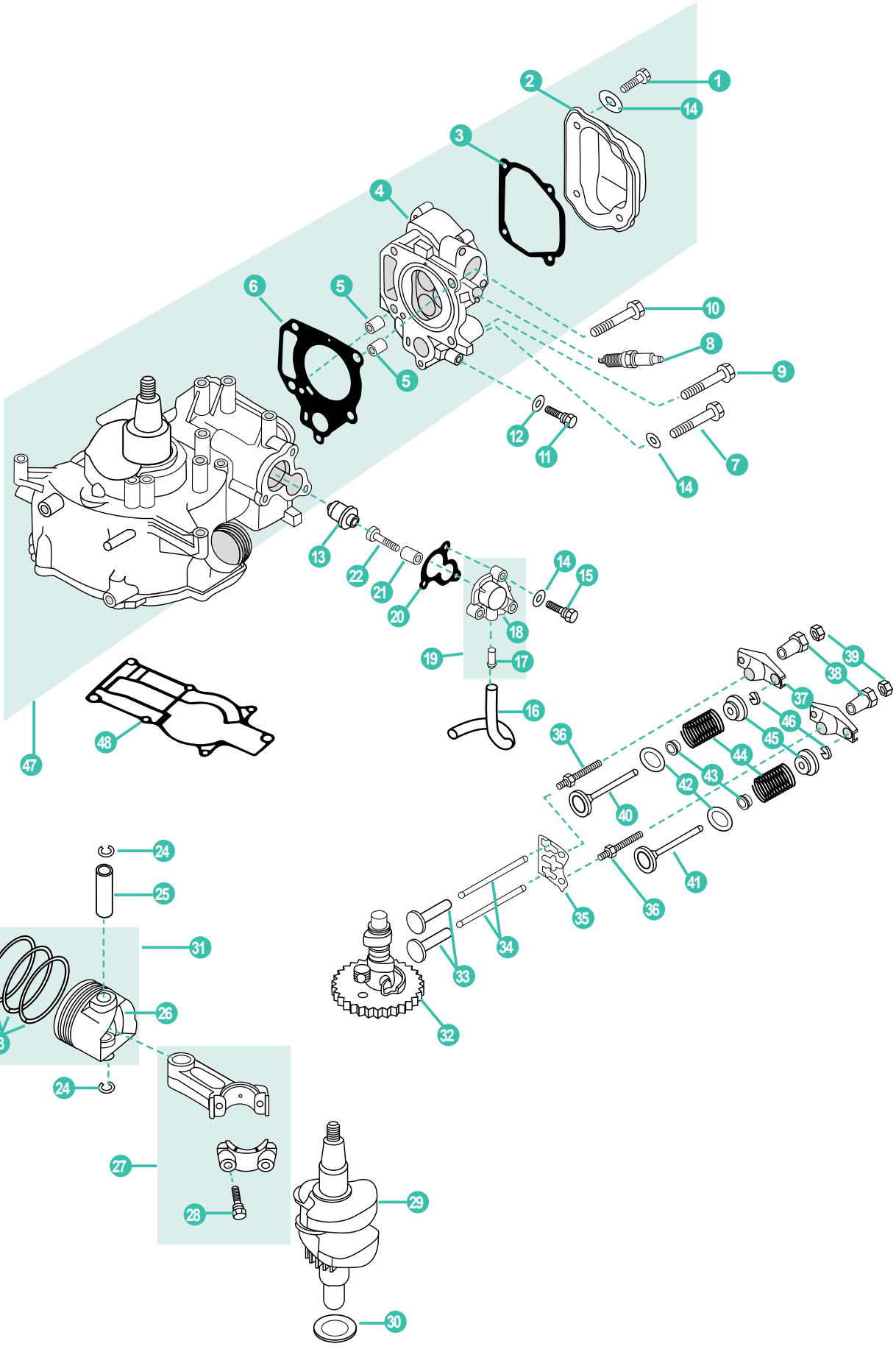
1
2
3
4
5
6
7
8
9
10
11
12
13
14
15
16
17
18
19
20
21
22
23
24
25
26
27
28
29
30
31
32
33
34
35
36
37
38
39
40
41
42
43
44
45
46
47
48

	REF	OEM					UN.
1	PAGB/T5783-M6X16	90105-06M14	TORNILLO	SCREW	VITE	VIS	4
2	PAF4-04000018	67D-11191-00	TAPA BALANCINES	COVER, CYLINDER HEAD	COPERCHIO PUNTERIE	CACHE CULBUTEUR	1
3	PAF4-04000017	68D-E1193-A0	JUNTA TAPA	GASKET, COVER	GAURNIZIONE COPERCHIO	JOINT COUVERCLE	1
4	PAF4-04080101	68D-E1111-10-1S	CULATA	CYLINDER, HEAD	TESTATA	CULASSE	1
5	PAF4-04000003	99510-10114	PIN	PIN, HOLLOW	SPINOTTO	GOUPILLE FENDUE	2
6	PAF4-04000014	67D-11181-A0	JUNTA CULATA	GASKET, CYLINDER HEAD	GUARNIZIONE TESTATA	JOINT DE CULASSE	1
7	PAGB/T5782-M6X45	90105-06M25	TORNILLO	SCREW	VITE	VIS	1
8	NGKBPR7HS	94702-00248	BUJÍA	SPARK PLUG	CANDELA	BOUGIE	1
9	PAF4-04000034	90105-08M36-00	TORNILLO	SCREW	VITE	VIS	3
10	PAF4-04000033	90105-08046-00	TORNILLO	SCREW	VITE	VIS	1
11	PAGB/T5783-M8X14	97095-08014-00	TORNILLO	SCREW	VITE	VIS	1
12	PAF4-04000006	90430-08800-00	ARANDELA	WASHER, PLATE	RONDELLA	RONDELLE	1
13	REC6AH-12411-00	69M-12411-01	TERMOSTATO	TEHRMOSTAT	TERMOSTATO	THERMOSTAT	1
14	PAGB/T97.1-6	92995-06600	ARANDELA	WASHER, PLATE	RONDELLA	RONDELLE	8
15	PAGB/T5783-M6X20	97095-06020-00	TORNILLO	SCREW	VITE	VIS	3
16	PAF4-04000012	90445-09807	TUBO	PIPE, RETURN	TUBO	DURITE D'EAU	1
17	PAF4-04010102	650-24378-00	PIPA DE AGUA	PIPE, WATER	TUBO	RACCORD TUYAU D'EAU	1
18	PAF4-04070001	67D-12413-00-1S	TAPA TERMOSTATO	COVER, THERMOSTAT	COPERCHIO TERMOSTATO	COUVERCLE THERMOSTAT	1
19	PAF4-04070100	68D-E2413-001S	TAPA TERMOSTATO COMPLETA	COVER ADN SPLIE WATER ASSY	TAPPO TERMOSTATO COMPLETO	COUVERCLE DE THERMOSTAT COMPLET	1
20	PAF4-04000011	68D-E2414-A0	JUNTA TAPA TERMOSTATO	GASKET, THERMOSTAT	GUARNIZIONE COPERCHIO TERMOSTATO	JOINT COUVERCLE DE THERMOSTAT	1
21	PAF4-04070003	68D-E1325-00	ÁNODO	ANODE	ANODO	ANODE	1
22	PAGB/T818-M5X25	97880-05025-00	TORNILLO	SCREW, PANHEAD	VITE	BOULON	1
23	REC68D-E1603-00	68D-E1603-00	KIT SEGMENTOS DE PISTÓN	PISTON RING KIT	KIT FASCIA PISTONE	KIT DE SEGMENTS	1
24	PAF4-04020006	93450-14088	CIRCLIP	CIRCLIP	CIRCLIP	CIRCLIP	2
25	PAF4-04020005	68D-E1633-00	PIN, PISTÓN	PIN, PISTON	SPINOTTO PISTONE	AXE DE PISTON	1
26	PAF4-04020001	68D-E1631-00-96	PISTÓN	PISTON	PISTONE	PISTON	1
27	PAF4-04020100	67D-11650-00	BIELA	ROD, CONNECTING	BIELLA	BIELLE	1
28	PAF4-04020103	67D-11654-00	TORNILLO	SCREW	VITE	VIS	2
29	PAF4-04030000	67D-11400-00	CIGÜEÑAL	CRANK ASSY	ALBERO MOTORE	VILEBREQUIN	1
30	PAF4-04000004	90201-266P2	ARANDELA	WASHER, PLATE	RONDELLA	RONDELLE	1
31	PAF4-04020200	68D-E1631-00-96	PISTÓN	PISTON ASSY	PISTONE	PISTON	1
32	PAF4-04040000	68D-E2170-00	ÁRBOL DE LEVAS	CAMSHAFT ASSY	ALBERO A CAMME	ARBRE À CAMES	1
33	PA166F-000001	JA9-12153-00	EMPUJADOR DE VÁLVULA	LIFTER, VALVE PUSH	ALZA VALVOLA	POUSSOIR	2
34	PAF4-04000015	67D-12154-00	VARILLA EMPUJADOR DE VÁLVULA	ROD, VALVE PUSH	ASTA, ALZA VALVOLA	TIGE DE CULBUTEUR	2
35	PAF4-04080009	68D-E2155-00	PLETINA EMPUJADORES	PLATE, PUSH ROD	PIASTRA, ASTA DI SPINTA	PLAQUE DE POUSSOIRS	1
36	PA166F-010008	67D-12157-00	TORNILLO	SCREW	VITE	VIS	2
37	PA166F-010009	67D-12151-00	BALANCÍN	VALVE ROCKER	BILANCERE	CULBUTEUR	2
38	PA166F-010010	7FK-12165-00	TUERCA BALANCÍN	PIVOT, ROCKER ARM	DADO BILANCERE	ECROU DU CULBUTEUR	2
39	PA166F-010011	7FK-12158-00	TUERCA	LOCKNUT	DADO	ECROU	1
40	PAF4-04080005	67D-12111-00	VÁLVULA ADMISIÓN	VALVE, INTAKE	VALVOLA ASPIRAZIONE	SOUPAPE D ADMISSION	1
41	PAF4-04080006	67D-12121-00	VÁLVULA ESCAPE	VALVE, EXHAUST	VALVOLA SCARICO	SOUPAPE D'ECHAPPEMENT	1
42	PAF4-04080007	68T-12116-00	ARANDELA ASIENTO	SEAT, VALVE SPRING	RONDELLA BASAMENTO	SIEGE RESSORT DE SOUPAPE	2
43	PAPS2700.04.03	51Y-12119-00	RETÉN DE VÁLVULA	SEAT, VALVE STEM	GOMMINO VALVOLA	JOINT QUEUE DE SOUPAPE	2
44	PAF4-04080008	68D-E2113-00	MUELLE	SPRING, VALVE INNER	MOLLA	RESSORT DE SOUPAPE	2
45	PAF8-05030006	7NJ-12117-00	RETÉN RESORTE	SPRING, VALVE RETAINER	VALVOLA DI RITEGNO	JOINT DE RESSORT	2
46	PAF8-05030007	7NJ-12118-00	SEGURO DE VÁLVULA	CLAMP, VALVE	BLOCCAGGIO DI VALVOLA	CLAVETTE DE SOUPAPE	2
47	PAF4-04000000	680-WE090-11-15	MOTOR	POWER HEAD 4-5	MOTORE	TÊTE MOTRICE	1
48	PAF4-00000006	67D-45113-A0	JUNTA BASE MOTOR	GASKET ENGINE	GUARNIZIONE BASE MOTORE	JOINT MOTEUR	1

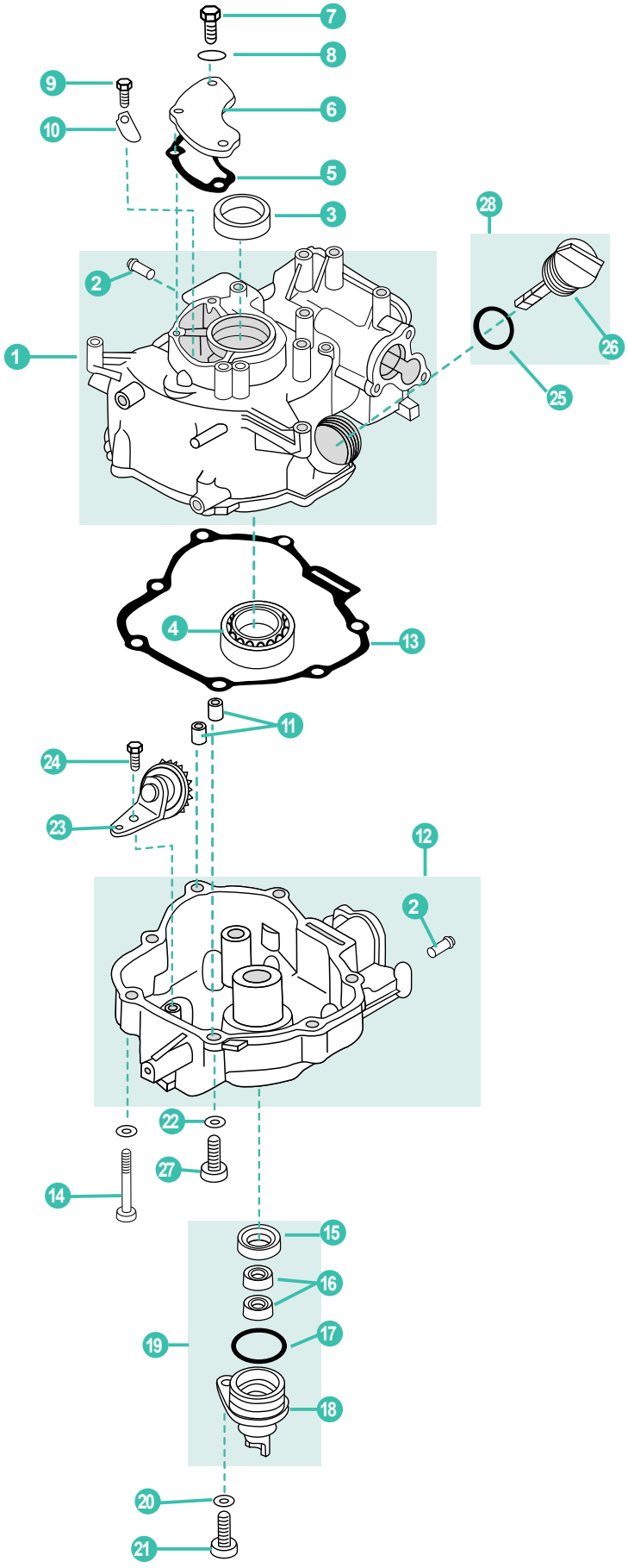
7
8
9
10
6
5
3
28
2
1
26
25
4
13
11
24
23
12
2
22
27
14
15
16
19
17
18
20
21

	REF	OEM					UN.
1	PAF4-04010100	68D-E1311-02-15	CARCASA DE MOTOR	CRANK CASE	COPERCHIO MOTORE	VILEBREQUIN	1
2	PAF4-04010102	650-24378-00	PIPA DE AGUA	PIPE, WATER	TUBO	RACCORD TUYAU D'EAU	2
3	PAF4-04010004	93102-25090	RETÉN	OIL SEAL	PARAOLIO	JOINT	1
4	PAGB/T276-6004C2	93306-205YD	RODAMIENTO	BALL BEARING	CUSCINETTO	ROULEMENT À BILLE	1
5	PAF4-04000009	68D-E1169-A0	JUNTA	BREATHER GASKET	GUARNIZIONE	JOINT	1
6	PAF4-04000010	68D-E1168-00	TAPA	COVER	COPERCHIO	COUVERCLE	1
7	PAGB/T5783-M6X14	90119-06M80-00	TORNILLO	SCREW	VITE	VIS	3
8	PAGB/T97.1-6	92885-06600	ARANDELA	WASHER	RONDELLA	RONDELLE	
9	PAGB/T818-M4X6	98503-04066-00	TORNILLO	SCREW	VITE	VIS	1
10	PAF4-04010003	68D-E5346-00	VÁLVULA	VALVE	VALVOLA	SOUPAPE	1
11	PAF4-04000003	99510-10114	PIN	HOLLOWPIN	SPINOTTO	GOUPILLE FENDUE	2
12	PAF4-04050200	68D-E5111-00-1S	CARTER	COVER, CRANK CASE	CARTER	CARTER	1
13	PAF4-04000002	68D-11351-A0	JUNTA CARTER	CRANK CASE COMPLEX	GUARNIZIONE CARTER	JOINT DE CARTER	1
14	PAGB/T5787-1986	97575-08550-00	TORNILLO	SCREW	VITE	VIS	7
15	PAF2.6-04010001	93102-20108	RETÉN	OIL SEAL	PARAOLIO	JOINT	1
16	PAF4-04060004	93102-10004	RETÉN	OIL SEAL	PARAOLIO	JOINT	2
17	PAF4-04060002	93210-35537	TÓRICA	O-RING	O-RING	JOINT TORIQUE	1
18	PAF4-04060001	68D-E5396-00-5B	CUERPO DEL RETÉN	SHELL, OIL SEAL	GUARNIZIONE CORPO	LOGEMENT JOINT D'HUILE	1
19	PAF4-04060000		CUERPO RETÉN COMPLETO	OIL SEAL, SHELL ASSY	CORPO GUARNIZIONE COMPLETO	LOGEMENT JOINT D'HUILE, COMPLET	1
20	PAGB/T97.1-8	92955-08600-00	ARANDELA	WASHER, PLATE	RONDELLA	RONDELLE	8
21	PAGB/T5783-M8X20	97095-08020-00	TORNILLO	BOLT, HEXAGON	VITE	BOULON	1
22	PAF4-04000006	90201-08818	ARANDELA	WASHER	RONDELLA	RONDELLE	1
23	PAF4-04050100	68D-E3102-00	PIÑÓN COMPELTO	GEAR UNIT ASSY	PIGNONE	PIGNON	1
24	PAGB/T5783-M6X12	95817-06012-00	TORNILLO	SCREW	VITE	VIS	1
25	PAF4-04000008	93210-24M79	TÓRICA	O-RING	O-RING	JOINT TORIQUE	1
26	PAF4-04000007	68D-E5362-00	TAPÓN MEDIDOR NIVEL	PLUG WITH DIPSTICK	TAPPO LIVELLO	BOUCHON AVEC JAUGE D'HUILE	1
27	PAF4-04000001	97095-08020-00	TORNILLO DRENAJE	BOLT, DISCHARGING OIL	VITE DRENAGGIO	VIS DE VIDANGE	1
28	PAF4-04000036		TAPÓN COMPLETO	PLUG ASSY	TAPPO COMPLETO	BOUCHON COMPLET	1



REF	OEM
REC67D-W0093-00	67D-W0093-00

P. 95



P. 40

REC10W30U3
REC10W30U6
REC10W40U3
REC10W40U6

4T STROKES F4B-M • F5A • F6C-M



	REF	OEM					UN.
1	PAF6-04050100	6BX-E1111-00-1S	CULATA COMPLETA	CYLINDER HEAD ASSY	TESTATA COMPLETA	CULASSE COMPLETE	1
2	PAF4-04000034	90105-08M36	TORNILLO	SCREW	VITE	VIS	4
3	PAF4-04000003	99510-10114	PIN CENTRADOR	HOLLOW PIN	SPINOTTO DI CENTRAGGIO	PIN DE CENTRAGE	2
4	PAF6-04000002	6BX-11181-00	JUNTA CULATA	GASKET, CYLINDER HEAD	GUARNIZIONE TESTATA	JOINT DE CULASSE	1
5	PAF6-04000004	6BX-E1191-00-5B	TAPA CULATA DE CILINDRO	COVER CYLINDER HEAD	COPERCHIO TESTA CILINDRO	CACHE CULBUTEUR	1
6	PAF6-04000005	6BX-11356-00	RETÉN DE ACEITE	SEAL RING	PARAOLIO	JOINT CACHE CULBUTEUR	1
7	PAGB/T5783-M6X20	97095-06020	TORNILLO	SCREW	VITE	VIS	5
8	PAGB/T97.1-6	92995-06600	ARANDELA	WASHER	RONDELLA	RONDELLE	15
9	PAF15-07000031	66M-12411-01	TERMOSTATO	THERMOSTAT	TERMOSTATO	THERMOSTAT	1
10	PAF4-04070000	68D-E2413-00-1S	TAPA TERMOSTATO	COVER, THERMOSTAT	COPERCHIO TERMOSTATO	COUVERCLE THERMOSTAT	1
11	PAF4-04010102	650-24378-00	NIPLE	NIPPLE	RACCORDO	RACCORD	1
12	PAF4-04070003	68D-E1325-00	ÁNODO	ANODE	ANODO	ANODE	1
13	PAGB/T818-M5X25	97880-05025	TORNILLO	SCREW	VITE	VIS	1
14	PAF4-04000011	68D-E2414-A0	JUNTA TAPA TERMOSTATO	GASKET, THERMOSTAT COVER	GUARNIZIONE COPERCHIO TERMOSTATO	JOINT COUVERCLE DE THERMOSTAT	1
15	PAGB/T5783-M6X20	90119-06MA2	TORNILLO	SCREW	VITE	VIS	3
16	PAF6-04000020	6BX-F4323-00	TUBO	TUBE	TUBO	DURITE D'EAU	1
17	PAT36-04000023	90465-06M86	BRIDA	CLAMP	FLANGIA	COLLIER	1
18	PAF6-04000009	6G0-82519-00	CABLE MASA	WIRE LEAD	PORTA CAVO	CABLE	1
19	NGKCR6HSB	94702-00372	BUJÍA	SPARK PLUG	CANDELA	BOUGIE	1
20	PAF6-04030000	6BX-E2170-00	ÁRBOL DE LEVAS	CAMSHAFT ASSY	ALBERO A CAMME	ARBRE À CAMES	1
21	PAF6-04050001	6BX-12111-00	VÁLVULA ADMISIÓN	VALVE, INTAKE	VALVOLA ASPIRAZIONE	SOUPAPE D ADMISSION	1
22	PAF6-04050002	6AU-12121-00	VÁLVULA ESCAPE	VALVE, EXHAUST	VALVOLA SCARICO	SOUPAPE D'ECHAPPEMENT	1
23	PAF166-010003	51Y-12119-00	RETÉN DE ACEITE	SEAL RING	PARAOLIO	JOINT D'HUILE	2
24	PAF6-04050003	60R-12113-00	RESORTE DE VÁLVULA	SPRING, VALVE	MOLLA VALVOLA	RESSORT	2
25	PAF4-04080007	68T-12116-00	RETÉN RESORTE	SPRING, VALVE RETAINER	VALVOLA DI RITEGNO	JOINT DE RESSORT	2
26	PA166F-010009	67D-12151-00	BRAZO DE BALANCÍN	ARM, VALVE ROCKER	BILANCERE	CULBUTEUR	2
27	PA166F-010010	7FK-12165-00	TUERCA BALANCÍN	PIVOT, ROCKER ARM	DADO BILANCERE	PIVOT CULBUTEUR	2
28	PA166F-010011	7FK-12158-00	TUERCA	LOCK NUT	DADO	ÉCROU	2
29	PA166F-010008	67D-12157-00	PERNO	BOLT	PERNO	BOULON	2
30	PAF6-04050004	6BX-E2155-00	PLETINA EMPUJADORES	PLATE, PUSH ROD	PIASTRA, ASTA DI SPINTA	PLAQUE DE POUSSOIRS	1
31	PAF6-04000003	6BX-12154-00	VARILLA EMPUJADOR	ROD, VALVE PUSH	ASTICELLA DI SPINTA	TIGE DE CULBUTEUR	2
32	PA166F-000001	JA9-12153-00	EMPUJADOR DE VÁLVULA	LIFTER, VALVE PUSH	ALZA VALVOLA	POUSSOIR	2
33	PANTN6205C3	93306-205B2	RODAMIENTO	BALL BEARING	CUSCINETTO	ROULEMENT À BILLE	1
34	PAF6-04010004	6BX-E1168-00	CUBIERTA DE RESPIRADERO	OIL BAFFLE PLATE	DIAFRAMMA OLIO	JOINT DE CARTER D'HUILE	1
35	PAGB/T5783-M5X10	97013-05010	PERNO	BOLT	PERNO	BOULON	2
36	PAF6-04000001	6BX-11351-00	JUNTA BASE MOTOR	GASKET ENGINE	GUARNIZIONE BASE MOTORE	JOINT MOTEUR	1
37	PAF4-04000003	99510-10114	PIN CENTRADOR	HOLLOW PIN	SPINOTTO DI CENTRAGGIO	PIN DE CENTRAGE	2
38	PAF4-04010102	650-24378-00	PIPA DE AGUA	PIPE, WATER	TUBO	RACCORD TUYAU D'EAU	1
39	PAF15-04000005	676-11372-00	NIPLE DE MANGUERA	WATER NIPPLE	RACCORDO COMPLETO	RACCORD D'EAU	1
40	PAF4-04060001	68D-E5396-00-5B	CAJA DE SELLO DE ACEITE	SHELL, OIL SEAL	GUARNIZIONE CORPO OLIO	LOGEMENT JOINT D'HUILE	1
41	PAGB/T345.2-D32.5XD1	93210-35537	TÓRICA	O-RING	O-RING	JOINT TORIQUE	1
42	PAF2.6-04010001	93102-20108	RETÉN DE ACEITE	SEAL RING	PARAOLIO	JOINT SPI	1
43	PAF4-04060004	93102-10004	RETÉN DE ACEITE	SEAL RING	PARAOLIO	JOINT SPI	2
44	PAGB/T5783-M8X20	97095-08020	PERNO	BOLT	PERNO	BOULON	1
45	PAGB/T97.1-8	92995-08600	ARANDELA	WASHER	RONDELLA	RONDELLE	1
46	PAGB/T5783-M8X14	97095-08014	PERNO	BOLT	PERNO	BOULON	1
47	PAF4-04000006	90430-08800	JUNTA	GASKET	GUARNIZIONE	JOINT	1
48	PAF6-00000001	6BX-45113-00	JUNTA	GASKET	GUARNIZIONE	JOINT	1
49	PAF8-05030007	7NJ-12118-00	CLIP	CLIP	CLIP	CLIP	1
50	PAF4-04000010	68D-E5362-00	TAPÓN COMPLETO	PLUG ASSY	TAPPO COMPLETO	BOUCHON COMPLET	1

4T STROKES F6A/M/B • FT/T/F8C/M/D/P/E/F • F9.9F • FT9.9G • F9.9J • FT9.9L



REC10W30U3
REC10W30U6
REC10W40U3
REC10W40U6

	REF	OEM					UN.
1	PAF15-07000031	66M-12411-01	TERMOSTATO	THERMOSTAT	TERMOSTATO	THERMOSTAT	1
2	REC6G8-12414-A0	60R-E2414-A0	JUNTA	GASKET	GUANIZIONE	JOINT	1
3	PAHT-2.5X60	90465-11M10	BRIDA	CLAMP	FLANGIA	COLLIER	1
4	PAF15-07000001	99510-10114	PIN CENTRADOR	HOLLOW PIN	SPINOTTO DI CENTRAGGIO	PIN DE CENTRAGE	2
5	PAF4-04000034	90105-08M36	TORNILLO	SCREW	VITE	VIS	2
6	PAF15-07000028	90105-08M78	TORNILLO	SCREW	VITE	VIS	4
7	PAF4-04010102	650-24378-00	PIPA DE AGUA	PIPE, WATER	TUBO	RACCORD TUYAU D'EAU	1
8	PAGB/T5783-M6X20	97095-06020	TORNILLO	BOLT	VITE	BOULON	4
9	PAGB/T97.1-6	92995-06600	ARANDELA	WASHER	RONDELLA	RONDELLE	7
10	CM6G8-11325-00A	6G8-11325-00	ÁNODO	ANODE	ANODO	ANODE	1
11	PAGB/T3452.1-13X2	93210-13M63	TÓRICA	O-RING	O-RING	JOINT TORIQUE	1
12	PAF15-07050004	69M-E5363-00	TAPÓN ACEITE	PLUG, OIL	TAPPO OLIO	BOUCHON REMPLISSAGE D'HUILE	1
13	PAF4-04000008	93210-24M79	TÓRICA	O-RING	O-RING	JOINT TORIQUE	1
14	NGKBR6HS-10	94702-00274	BUJÍA	SPARK PLUG	CANDELA	BOUGIE	2
15	PA166F-010001	67D-12111-00	VÁLVULA ADMISIÓN	VALVE, INTAKE	VALVOLA ASPIRAZIONE	SOUPAPE D ADMISSION	2
16	PAF4-04080006	67D-12121-00	VÁLVULA ESCAPE	VALVE, EXHAUST	VALVOLA SCARICO	SOUPAPE D'ECHAPPEMENT	2
17	PAF4-04080007	68T-12116-00	ARANDELA DE ASIENTO	SEAT, VALVE SPRING	RONDELLA BASAMENTO	SIEGE RESSORT DE SOUPAPE	2
18	PA166F-010003	51Y-12119-00	RETÉN DE ACEITE	SEAL RING	PARAOLIO	JOINT D'HUILE	4
19	PAF15-07040012	90387-13M56	CASQUILLO	BUSHER	BOCCOLA	BAGUE	1
20	PAF15-07040014	90501-12M40	RESORTE DE COMPRESIÓN	SPRING, ROCKER	MOLLA	RESSORT ROCKER	2
21	PAF15-07040008	93102-18M21	RETÉN DE ACEITE	SEAL RING	PARAOLIO	JOINT D'HUILE	1
22	PAF15-07040017	90201-13201	ARANDELA	WASHER	RONDELLA	RONDELLE	1
23	PAGB/T5287-6	90201-06M94	ARANDELA	WASHER	RONDELLA	RONDELLE	1
24	REC68T-46241-00	60R-G6241-00	CORREA	BELT	CINGHIA	COURROIE DISTRIBUTION	1
25	PAGB/T1099-3X5X13	90280-03M01	CHAVETA	KEY WOODRUFF	CHIAVETTA	CLAVETTE	2
26	PAGB/T5783-M6X30	97095-06030	PERNO	BOLT	VITE	BOULON	3

F8AM/BM/B/BE • F9.9 AE/AM/B/BE/BMH/ELH (1985-99)

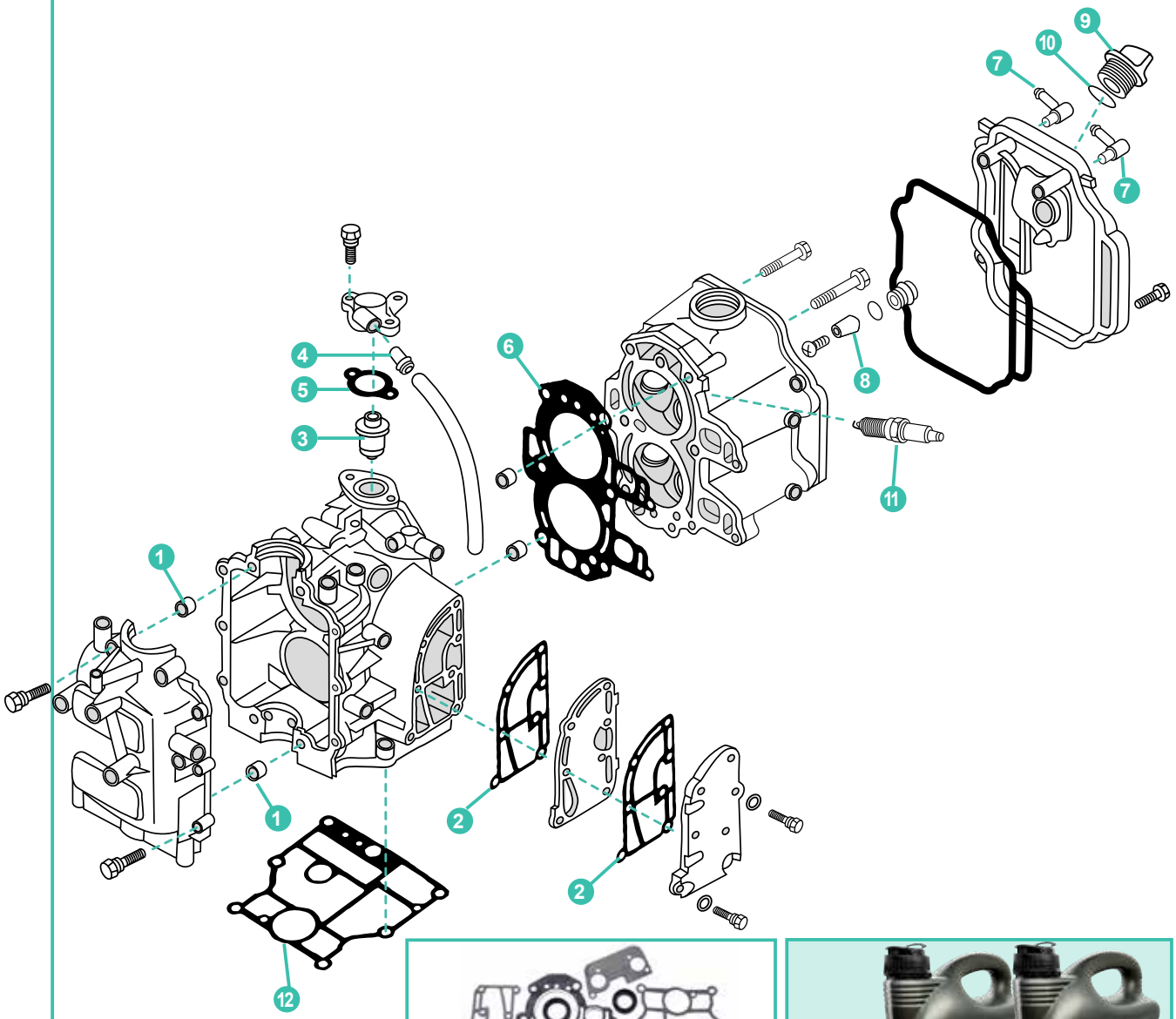



REF	OEM
REC6G8-W0001-A3	6G8-W0001-A3

P. 216



P. 40

REC10W30U3
REC10W30U6
REC10W40U3
REC10W40U6

	REF	OEM					UN.
1	PAF15-07000001	91810-03014	PIN	PIN	PIN	PIN	2
2	REC6G8-41112-02	6G8-41112-02	JUNTA	GASKET	GUARNIZIONE	JOINT	2
3	REC6AH-12411-00	6G8-12411-00	TERMOSTATO	THERMOSTAT	TERMOSTATO	THERMOSTAT	1
4	PAF15-07010006	6E5-24377-00	PIPA DE AGUA	PIPE, WATER	TUBO	RACCORD TUYAU D'EAU	1
5	REC6G8-12414-A0	6G8-12414-00	JUNTA TAPA TERMOSTATO	GASKET, THERMOSTAT COVER	GUARNIZIONE COPERCHIO TERMOSTATO	JOINT COUVERCLE DE THERMOSTAT	1
6	REC6G8-11181-A1	6G8-11181-00	JUNTA CULATA	GASKET, CYLINDER HEAD	GUARNIZIONE TESTATA	JOINT DE CULASSE	1
7	PAF15-04000005	676-11372-00	NIPLE	HOSE NIPLE	TUBO	TUYAU	2
8	CM6G8-11325-00	6G8-11325-00	ÁNODO	ANODE	ANODO	ANODE	1
9	PAF15-07050004	6G8-15363-00	TAPÓN ACEITE	PLUG, OIL	TAPPO OLIO	BOUCHON REMPLISSAGE D'HUILE	1
10	PAJASOF40431-025	93210-24M79	TÓRICA	O-RING	O-RING	JOINT TORIQUE	1
11	NGKCR6HS	94701-00282	BUJÍA	SPARK PLUG	CANDELA	BOUGIE	2
12	REC6G8-11351-A0	6G8-11351-00	JUNTA BASE MOTOR	GASKET ENGINE	GUARNIZIONE BASE MOTOR	JOINT MOTEUR	1

4T STROKES F9.9 (2004-06) • F9.9C • F13.5 (2003-06) • F15 (2003-07) • F15A

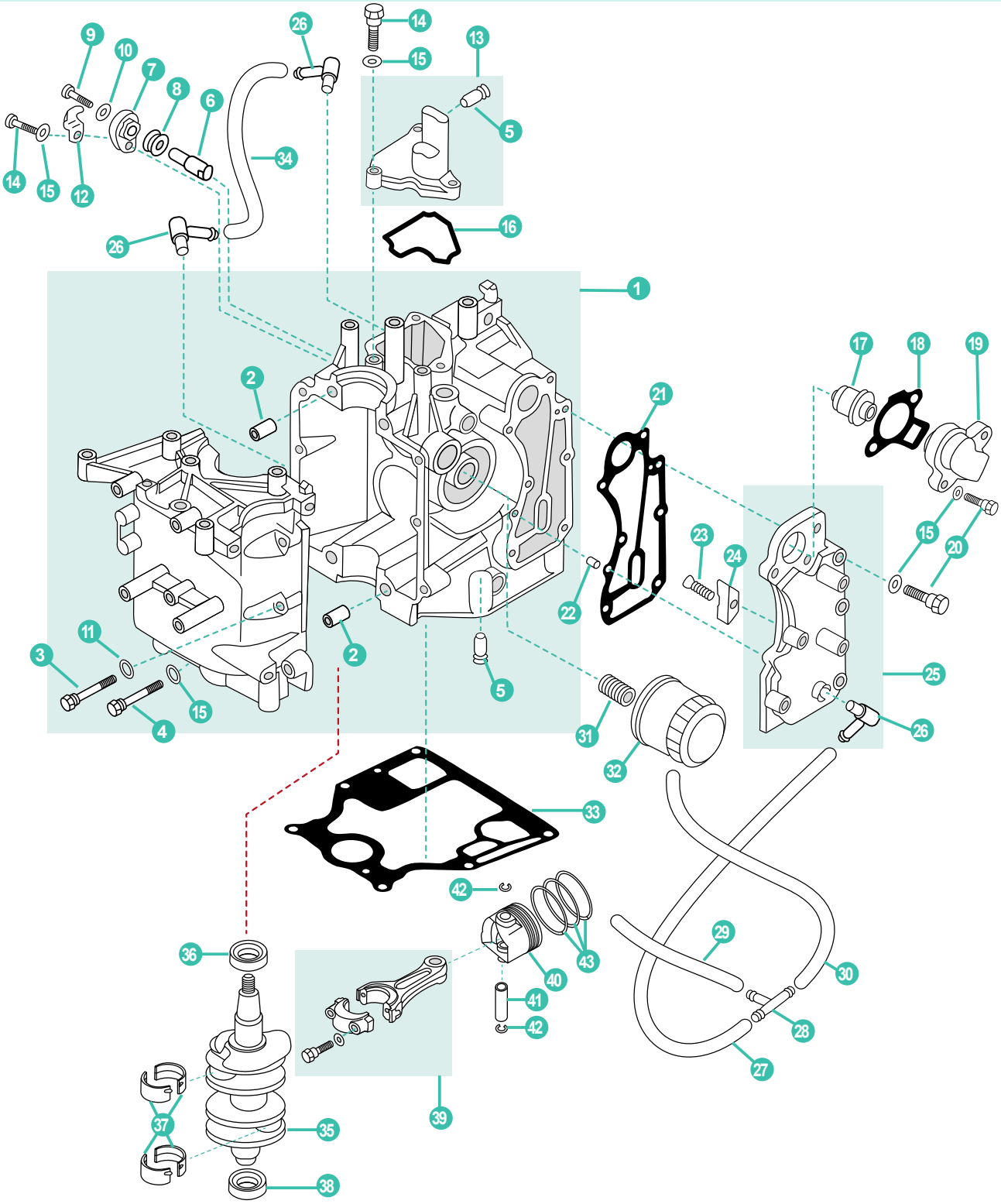



REF	OEM	
REC66M-W0093-01	66M-W0093-01	P. 95

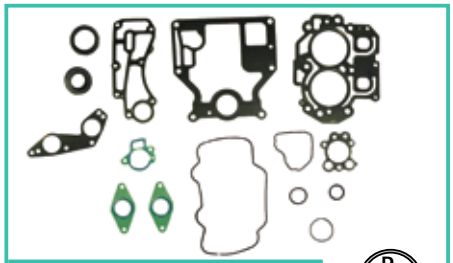

REF	OEM	
REC66M-W0001-01	66M-W0001-01	P. 216



P. 40

REC10W30U3
REC10W30U6
REC10W40U3
REC10W40U6

	REF	OEM					UN.
1	PAF15-07010000	66M-15100-02-1S	BLOQUE MOTOR COMPLETO	CRANKCASE ASSY	BLOCCO MOTORE COMPLETO	CARTER BLOC MOTEUR	1
2	PAF15-07000001	99510-10114	PIN CENTRADOR	HOLLOW PIN	SPINOTTO DI CENTRAGGIO	PIN DE CENTRAGE	2
3	PAGB/T5783-M5X12	93102-25090	TORNILLO	SCREW	VITE	VIS	6
4	PAGB/T5783-M5X12	93306-205YD	TORNILLO	SCREW	VITE	VIS	4
5	PAF15-07010006	6E5-24377-00	PIPA DE AGUA	PIPE, WATER	TUBO	RACCORD TUYAU D'EAU	2
6	PAF15-07010008	66M-11325-00	ÁNODO	ANODE	ANODO	ANODE	1
7	PAF15-07010011	66M-11327-00-94	TAPA ÁNODO	COVER, ANODE	COPERTURA ANODO	COUVERCLE DU ANODE	1
8	PAF15-07010009	66M-11328-00	ALOJAMIENTO ÁNODO	GROMMET, ANODE	ALLOGGIAMENTO ANODO	JOINT D'ANODE	1
9	PAGB/T5783-M5X12	97095-0512	TORNILLO	SCREW	VITE	VIS	1
10	PAGB/T97.1-8	92995-05600	ARANDELA	WASHER	RONDELLA	RONDELLE	1
11	PAGB/T97.1-8	97595-06520	ARANDELA	WASHER	RONDELLA	RONDELLE	4
12	PAF15-07010012	66M-12535-00	EMPAQUETADORA DE ÁNODO	PLATE, ANODE	PIASTRA ANODO	PLAQUE D'ANODE	1
13	PAF15-07010200	66M-11168-001S	TAPA	COVER, BREATHER	COPERCHIO	COUVERCLE	1
14	PAGB/T5783-M5X12	97575-08550-00	TORNILLO	SCREW	VITE	VIS	4
15	PAGB/T97.1-8	93102-20108	ARANDELA	WASHER	RONDELLA	RONDELLE	17
16	PAF15-07010014	66M-11357-00	JUNTA TAPA	GASKET, COVER	GAURNIZIONE COPERCHIO	JOINT COUVERCLE	1
17	PAF15-07000031	66M-12411-01	TERMOSTATO	THERMOSTAT	TERMOSTATO	THERMOSTAT	1
18	PAF15-07010022	62Y-12414-00	JUNTA TAPA TERMOSTATO	GASKET, THERMOSTAT COVER	GUARNIZIONE COPERCHIO TERMOSTATO	JOINT COUVERCLE DE THERMOSTAT	1
19	PAF15-07010021	6H3-12413-001S	TAPA TERMOSTATO	COVER, THERMOSTAT	COPERCHIO TERMOSTATO	COUVERCLE DE THERMOSTAT	1
20	PAGB/T5783-M5X12	90201-08818	TORNILLO	SCREW	VITE	VIS	7
21	PAF15-07010018	66M-41114-01	JUNTA EXTERIR, TAPA DE ESCAPE	GASKET, EXHAUST OUTER COVER	GUARNIZIONE ESTERIORE, COPERCHIO SCARICO	JOINT DE COUVERCLE EXT ECHAPPEMENT	1
22	PAF15-07000013	93604-12M07	PIN	OPIN	SPINOTTO	LEVIER D'ENTRAINEMENT	2
23	PAGB/T5783-M5X12	68D-E5362-00	TORNILLO	SCREW	VITE	VIS	1
24	PAF15-07010026	6E5-11325-00	ÁNODO	ANODE	ANODO	ANODE	1
25	PAF15-07010019	66M-41113-20-1S	TAPA ESCAPE COMPLETA	OUTTER COVER, EXHAUST	COPERCHIO SCARICO COMPLETA	COUVERCLE ECHAPPEMENT EXTERIEUR	1
26	PAF15-04000005	676-11372-00	NIPLE DE MANGUERA	NIPPLE	TUBO	RACCORD D'EAU	3
27	PAF15-05000012	90445-09061	TUBO	HOSE A	TUBO	DURITE D'EAU	1
28	PAF15-05000011	688-24378-00	CONECTOR DE 3 VÍAS	THREE-WAY PIPE	CONNETTORE T	TE	1
29	PAF15-05000013	90445-09086	TUBO	HOSE B	TUBO	DURITE D'EAU	1
30	PAF15-05000014	90445-09104	TUBO	HOSE C	TUBO	DURITE D'EAU	1
31	PAF15-07010003	90401-20M00	TORNILLO	SCREW	VITE	VIS	1
32	PAF15-07010023	5GH-13440-00	FILTRO ACEITE	OIL FILTER	FILTRO DELL'OLIO	FILTRE À HUILE	1
	REC5GH-13440-00	5GH-13440-00	FILTRO ACEITE	OIL FILTER	FILTRO DELL'OLIO	FILTRE À HUILE	1
33	PAF15-00000014	66M-11351-10	JUNTA BASE MOTOR	GASKET ENGINE	GUARNIZIONE BASE MOTORE	JOINT MOTEUR	1
34	PAF15-07010007	90445-10M46	TUBO	HOSE, RETURN OIL	TUBO	TUYAU	1
35	PAF15-07030000	66M-11411-00	CIGÜEÑAL	CRANK ASSY	ALBERO MOTORE	VILEBREQUIN	1
36	PAF15-07030006	93102-35M51	RETÉN DE ACEITE	OIL SEAL	PARAOLIO	JOINT D'HUILE	1
37	PAF15-07010024	66M-11416-00	COJINETE BANCADA	MAIN BEARING	CUSCINETTO	PALIER DE VILEBREQUIN	4
38	PAF15-07030007	93102-25M52	RETÉN DE ACEITE	OIL SEAL	PARAOLIO	JOINT D'HUILE	1
39	PAF15-07020100	66M-11650-00	BIELA	ROD, CONNECTING	BIELLA	BIELLE	2
40	PAF15-07020001	66M-11631-00-96	PISTÓN	PISTON	PISTONE	PISTON	2
41	PAF15-07020006	634-11633-00	BULÓN	PIN, PISTON	BULLONE	AXE DE PISTON	2
42	PAF15-07020005	93450-15023	CIRCLIP	CIRCLIP	CIRCLIP	CIRCLIP	4
43	REC66N-11603-00	66N-11603-00	KIT SEGMENTOS DE PISTÓN	PISTON RING KIT	KIT FASCIA PISTONE	KIT DE SEGMENTS	2

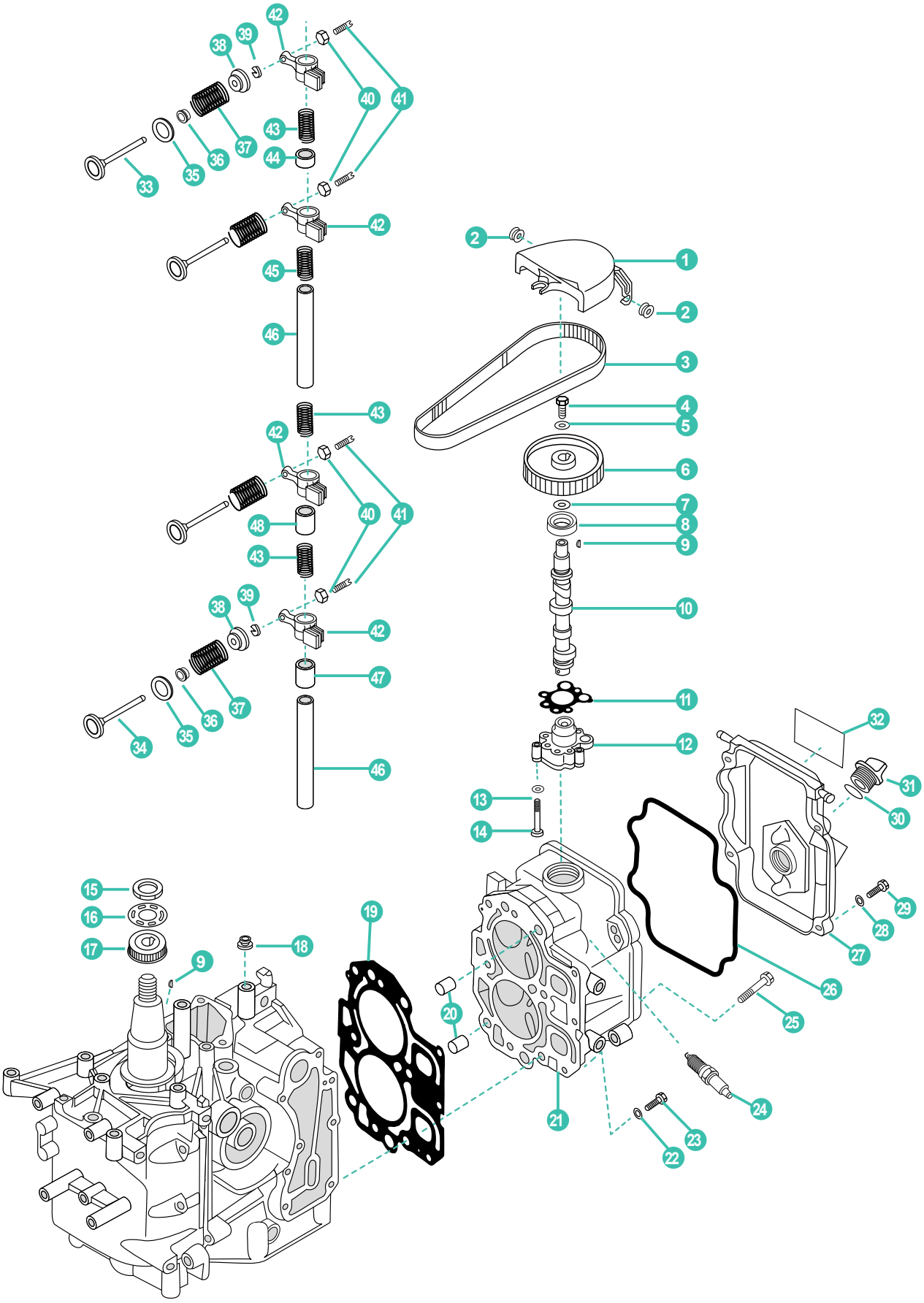
42
38
39
40
41
43
44
37
36
35
33
42
45
46
43
42
40
41
48
43
38
39
42
47
37
36
35
34
46
2
1
2
3
4
5
6
7
8
9
10
11
12
32
31
30
13
14
29
28
27
26
25
15
16
17
18
19
9
20
24
21
23
22

	REF	OEM					UN.
1	PAF15-07000024	66M-46297-00	TAPA	COVER, DUST	COPERCHIO	COUVERCLE	1
2	PAF15-07050003	90480-10M16	GOMA	RING RUBBER A	GOMMINO	BAGUE DE COUVERCLE	2
3	REC66M-46241-00	66M-46241-00	CORREA DISTRIBUCIÓN	BELT TIMING	CINGHIA DISTRIBUZIONE	COURROIE DISTRIBUTION	1
4	PAGB/T5783-M5X12	97013-06016	TORNILLO	BOLT	VITE	VIS	1
5	PAGB/T5287-6	90201-06M94	ARANDELA	BIG WASHER	RONDELLA	RONDELLE	1
6	PAF15-07040018	66M-11537-00-94	POLEA DE CORREA	BELT PULLEY, DRIVEN	PULEGGIA	POULIE DE COURROIE	1
7	PAF15-07040017	90201-13201	ARANDELA	WASHER	RONDELLA	RONDELLE	1
8	PAF15-07040008	93102-18M21	RETÉN DE ACEITE	OIL SEAL	PARAOLIO	JOINT D'HUILE	1
9	PAGB/T1099-3X5X13	90280-03M01	CHAVETA	KEY, WOODRUFF	CHIAVETTA	CLAVETTE	2
10	PAF15-07040200	66M-12170-00	ÁRBOL DE LEVAS	CAMSHAFT ASSY	ALBERO A CAMME	ARBRE À CAMES	1
11	PAF15-07040016	66M-13329-10	JUNTA	MAT, AIRPROOF	GUARNIZIONE	JOINT	1
12	PAF15-07040500	66M-13300-10	BOMBA ACEITE	OIL PUMP ASSY	POMPA DELL'OLIO	POMPE À HUILE	1
13	PAGB/T97.1-8	92995-06600	ARANDELA	WASHER	RONDELLA	RONDELLE	3
14	PAGB/T5783-M5X12	97095-06035	TORNILLO	BOLT	VITE	VIS	3
15	PAF15-07030005	90170-28M37	TUERCA	NUT	GHIERA	ÉCROU	1
16	PAF15-07030004	66M-11557-00	ARANDELA	WASHER	RONDELLA	RONDELLE	1
17	PAF15-07030003	66M-11536-10	POLEA DENTADA	BELT PULLEY, TIMING	PULEGGIA	POULIE	1
18	PAF15-07010027	90480-12072	GOMA	RUBBER RING	GOMMINO	BAGUE DE COUVERCLE	1
19	PAF15-07000100	66M-11181-10	JUNTA CULATA	GASKET, CYLINDER HEAD	GUARNIZIONE TESTATA	JOINT DE CULASSE	1
20	PAF15-07000001	99510-10114	PIN CENTRADOR	HOLLOW PIN	SPINOTTO DI CENTRAGGIO	PIN DE CENTRAGE	2
21	PAF15-07040000	66M-11111-01-1S	CULATA	CYLINDER HEAD ASSY	TESTATA	CULASSE	1
22	PAGB/T97.1-6	92990-06600	ARANDELA	WASHER	RONDELLA	RONDELLE	3
23	PAGB/T5783-M6X25	97513-06525	TORNILLO	BOLT	VITE	VIS	3
24	NGKDPR7EA-9	94701-00375	BUJÍA	SPARK PLUG	CANDELA	BOUGIE	2
25	PAF15-07000028	90105-08M78	TORNILLO	BOLT, FLANGE	VITE	VIS	6
26	PAF15-07050002	66M-11356-00	JUNTA TAPA	SEAL, CYLINDER COVER	GAURNIZIONE COPERCHIO	JOINT COUVERCLE	1
27	PAF15-07050001	66M-11191-00-1S	TAPA BALANCINES	COVER, CYLINDER HEAD	COPERCHIO PUNTERIE	CACHE CULBUTEUR	1
28	PAGB/T5783-M5X12	92995-06600	ARANDELA	WASHER, PLATE	RONDELLA	RONDELLE	7
29	PAGB/T5783-M6X20	97595-06520	TORNILLO	BOLT	VITE	VIS	4
30	PAF4-04000008	93210-24M79	TÓRICA	O-RING	O-RING	TORIQUE	1
31	PAF15-07050004	6G8-15363-00	TAPÓN ACEITE	PLUG, OIL	TAPPO OLIO	BOUCHON REMPLISSAGE D'HUILE	1
32	PAF15-10030001	66M-12138-60	ADHESIVO 4	MARK 4	ADESIVO 4	AUTOCOLLANT 4	1
33	PAF15-07040001	66M-12111-00	VÁLVULA ADMISIÓN	VALVE, INTAKE	VALVOLA ASPIRAZIONE	SOUPAPE D ADMISSION	2
34	PAF15-07040002	66M-12121-00	VÁLVULA ESCAPE	VALVE, EXHAUST	VALVOLA SCARICO	SOUPAPE D'ECHAPPEMENT	2
35	PAF15-07040004	66M-12116-00	ARANDELA DE ASIENTO	SEAT, VALVE SPRING	RONDELLA BASAMENTO	SIEGE RESSORT DE SOUPAPE	4
36	PAPS2700.04.03	51Y-12119-00	RETÉN	SEAL, VALVESTEM	GUARNIZIONE	JOINT D'HUILE	4
37	PAF15-07040005	66M-12113-00	MUELLE	SPRING, VALVE	MOLLA	RESSORT	4
38	PAF15-07050006	30X-12117-00	RETÉN RESORTE	SPRING, VALVE RETAINER	VALVOLA DI RITEGNO	JOINT DE RESSORT	4
39	PAF15-07040007	30X-12118-00	SEGURO DE VÁLVULA	CLAMP, VALVE	BLOCCAGGIO DI VALVOLA	CLAVETTE DE SOUPAPE	8
40	PAF15-07040304	62Y-12158-00	TUERCA	LOCK NUT	DADO	ÉCROU	4
41	PAF15-07040303	62Y-12159-00	TORNILLO REGULADOR	SCREW, VALVE ADJUSTING	VITE REGOLATORE	VIS POINTEAU	4
42	PAF15-07040301	66M-12151-10	BALANCÍN	VALVE ROCKER	BILANCERE	CULBUTEUR	4
43	PAF15-07040014	90501-12M40	MUELLE	SPRING, ROCKER	MOLLA	RESSORT	3
44	PAF15-07040009	90387-13001	CASQUILLO	BUSHER	GOMMINO	DOUILLE	1
45	PAF15-07040013	90501-12M41	MUELLE	SPRING, ROCKER A	MOLLA	RESSORT	1
46	PAF15-07040015	66M-12146-00	EJE DE BALANCÍN	SHAFT, ROCKER	ASSE BILANCERE	AXE DE CULBUTEUR	2
47	PAF15-07040012	90387-13M56	CASQUILLO B	BUSHER B	GOMMINO B	BAGUE B	1
48	PAF15-07040011	90387-13002	CASQUILLO A	BUSHER A	GOMMINO A	BAGUE A	1
49	PAF15-07000000	66M-W009B-15-1S	MOTOR COMPLETO	POWER HEAD COMPLETE	MOTORE COMPLETO	MOTEUR COMPLET	1

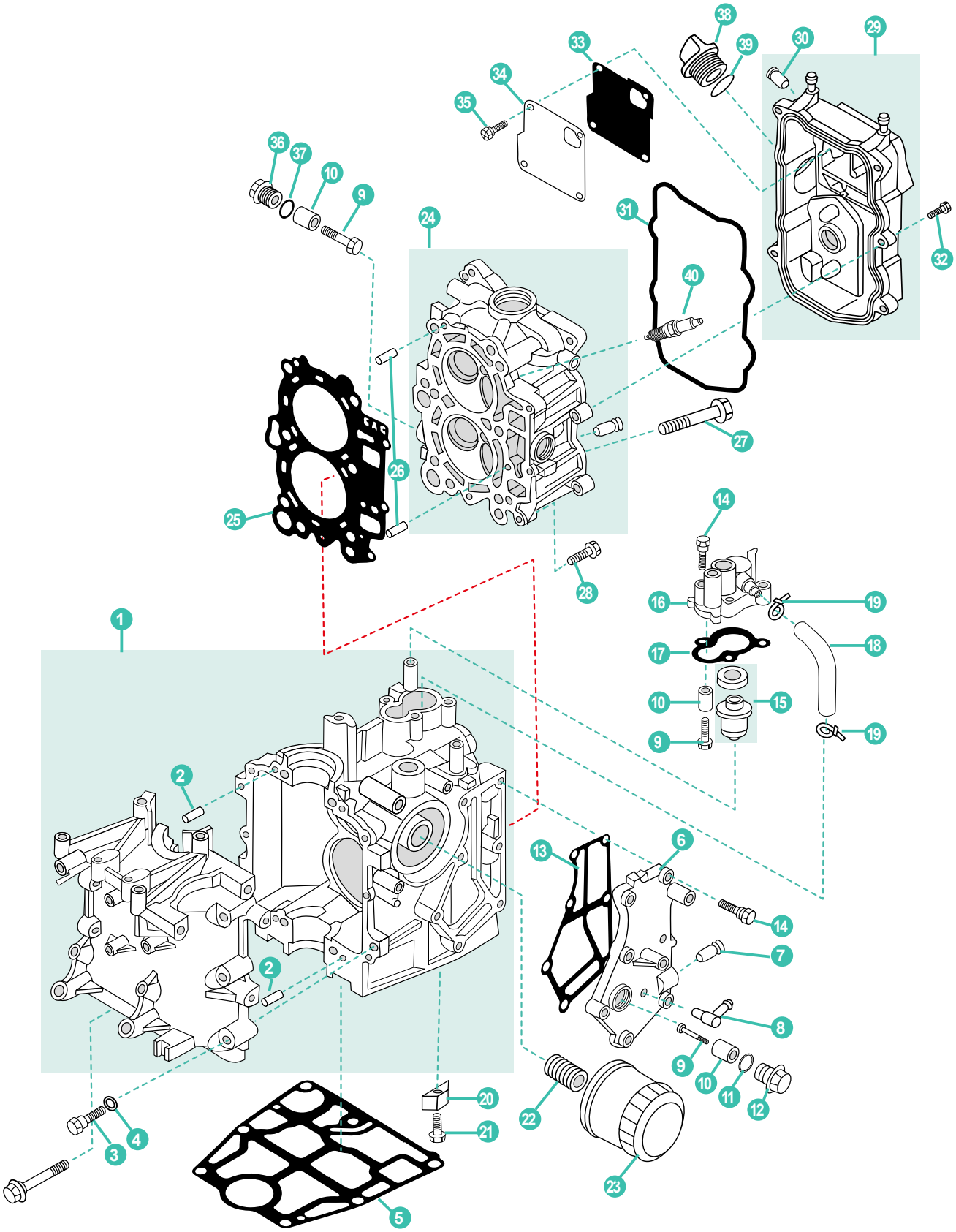
38
39
30
29
33
34
35
36
37
10
9
24
31
40
32
27
26
25
28
14
16
19
17
18
10
15
9
19
1
2
2
13
6
14
7
8
9
10
11
12
22
23
20
21
3
4
5

	REF	OEM					UN.
1	PAF20-05010000	6AH-15100-00	CÁRTER COMPLETO	CRANKCASE ASSY	CARTER COMPLETO	CARTER BLOC MOTEUR	1
2	REC93606-12019	93606-12019	PIN CENTRADOR	HOLLOW PIN	SPINOTTO DI CENTRAGGIO	PIN DE CENTRAGE	4
3	PAF20-05010007	97013-06040	PERNO	BOLT	BULLONE	BOULON	6
4	PAGB/T97.1-6	92903-06600	ARANDELA	WASHER	RONDELLA	RONDELLE	6
5	REC6AH-11351-00	6AH-11351-10	JUNTA DE ESCAPE	EXHAUST GASKET	GUARNIZIONE DI SCARICO	JOINT D'ECHAPPEMENT	1
6	PAF20-05000600	6AH-41113-01-1S	CUBIERTA DE ESCAPE	EXHAUST COVER	COPERCHIO SCARICO	COUVERCLE D'ECHAPPEMENT	1
7	PAF4-04010102	6E9-24378-00	PIPA DE AGUA	PIPE, WATER	TUBO	RACCORD TUYAU D'EAU	1
8	PAF15-04000005	6H1-11372-00	NIPLE DE MANGUERA	NIPPLE	TUBO	RACCORD D'EAU	1
9	PAGB/T818-M5X25	98980-05025	TORNILLO	SCREW	VITE	VIS	4
10	CM6G8-11325-00A	6G8-11325-00	ÁNODO	ANODE	ANODO	ANODE	4
11	PAGB/T3452.1-13X2	93210-13M63	ANILLO	O-RING	O-RING	TORIQUE	1
12	PAF20-05030009	6G8-11197-A0	TAPÓN	CAP	TAPPO	BOUCHON	1
13	PAF20-05000602	6AH-41114-00	JUNTA DE ESCAPE	EXHAUST GASKET	GUARNIZIONE DI SCARICO	JOINT D'ECHAPPEMENT	1
14	PAGB/T5783-M6X25	90119-06MA3	TORNILLO	SCREW	VITE	VIS	3
15	REC6AH-12411-00	6AH-12411-00	TERMOSTATO	THERMOSTAT	TERMOSTATO	THERMOSTAT	1
16	PAF20-05000700	6AH-12413-00-1S	TAPA TERMOSTATO	COVER, THERMOSTAT	COPERCHIO TERMOSTATO	COUVERCLE DE THERMOSTAT	1
17	PAF20-05000702	6AH-12414-00	JUNTA	GASKET	GUARNIZIONE	JOINT	1
18	PAF20-05000016	6AH-12481-00	TUBO DE AGUA	WATER TUBE	TUBO DELL'ACQUA	DURITE D'EAU	1
19	PAHT2.5X50	90465-11M10	BRIDA	CLAMP	FLANGIA	COLLIER	2
20	CM15026A	6E5-11325-00	ÁNODO	ANODE	ANODO	ANODE	1
21	PAGB/T820-M4X12	98780-04016	TORNILLO	SCREW	VITE	VIS	1
22	PAF15-07010003	6C5-12858-00	PERNO	STUD	BULLONE	BOULON	1
23	REC5GH-13440-60	5GH-13440-60	FILTRO ACEITE	OIL FILTER	FILTRO DELL'OLIO	FILTRE À HUILE	1
24	PAF20-05030100	6AH-11111-10-1S	CULATA	CYLINDER HEAD	TESTATA	CULASSE	1
25	REC6AG-11181-00	6AG-11181-10	JUNTA CULATA	GASKET, CYLINDER HEAD	GUARNIZIONE TESTATA	JOINT DE CULASSE	1
26	REC93606-12019	93606-12019	PIN CENTRADOR	HOLLOW PIN	SPINOTTO DI CENTRAGGIO	PIN DE CENTRAGE	2
27	PAF20-05000002	90105-090006	TORNILLO	SCREW	VITE	VIS	6
28	PAF8-05000022	90119-06MA3	TORNILLO	SCREW	VITE	VIS	3
29	PAF20-05040000	6AH-11191-001S	TAPA DE CULATA COMPLETA	CYLINDER HEAD COVER ASSY	COPERCHIO TESTATA COMPLETA	CACHE CULBUTEUR COMPLÈTE	1
30	PAF20-05040005	6AH-11372-00	NIPLE DE MANGUERA	NIPPLE	TUBO	RACCORD D'EAU	1
31	PAF20-05040002	6AH-11356-00	RETÉN DE ACEITE	OIL SEAL	PARAOLIO	JOINT D'HUILE	1
32	PAGB/T5783-M6X20	97595-06520	PERNO	STUD	BULLONE	BOULON	5
33	PAF20-05040003	6AH-11168-00	CUBIERTA DE RESPIRADERO	COVER, BREATHER	COPERCHIO	PLAQUE	1
34	PAF20-05040004	6AH-11169-00	JUNTA DE CUBIERTA	GASKET, BREATHER	GUARNIZIONE COPERCHIO	JOINT DE PLAQUE	1
35	PAGB/T818-M4X10	97607-04210	TORNILLO	SCREW	VITE	VIS	4
36	PAF20-05030009	6G8-11197-A0	TAPÓN	CAP	TAPPO	BOUCHON	2
37	PAGB/T3452.1-13X2	93210-13M63	ANILLO	O-RING	O-RING	TORIQUE	2
38	PAF15-07050004	6G8-15363-00	TAPÓN DE ACEITE	OIL CAP	TAPPO OLIO	BOUCHON REMPLISSAGE D'HUILE	1
39	PAJASOF40431-025	93210-24M79	ANILLO	O-RING	O-RING	TORIQUE	1
40	NGKDPR6EB-9	94702-00418	BUJÍA	SPARK PLUG	CANDELA	BOUGIE	2



REC10W30U3
REC10W30U6
REC10W40U3
REC10W40U6

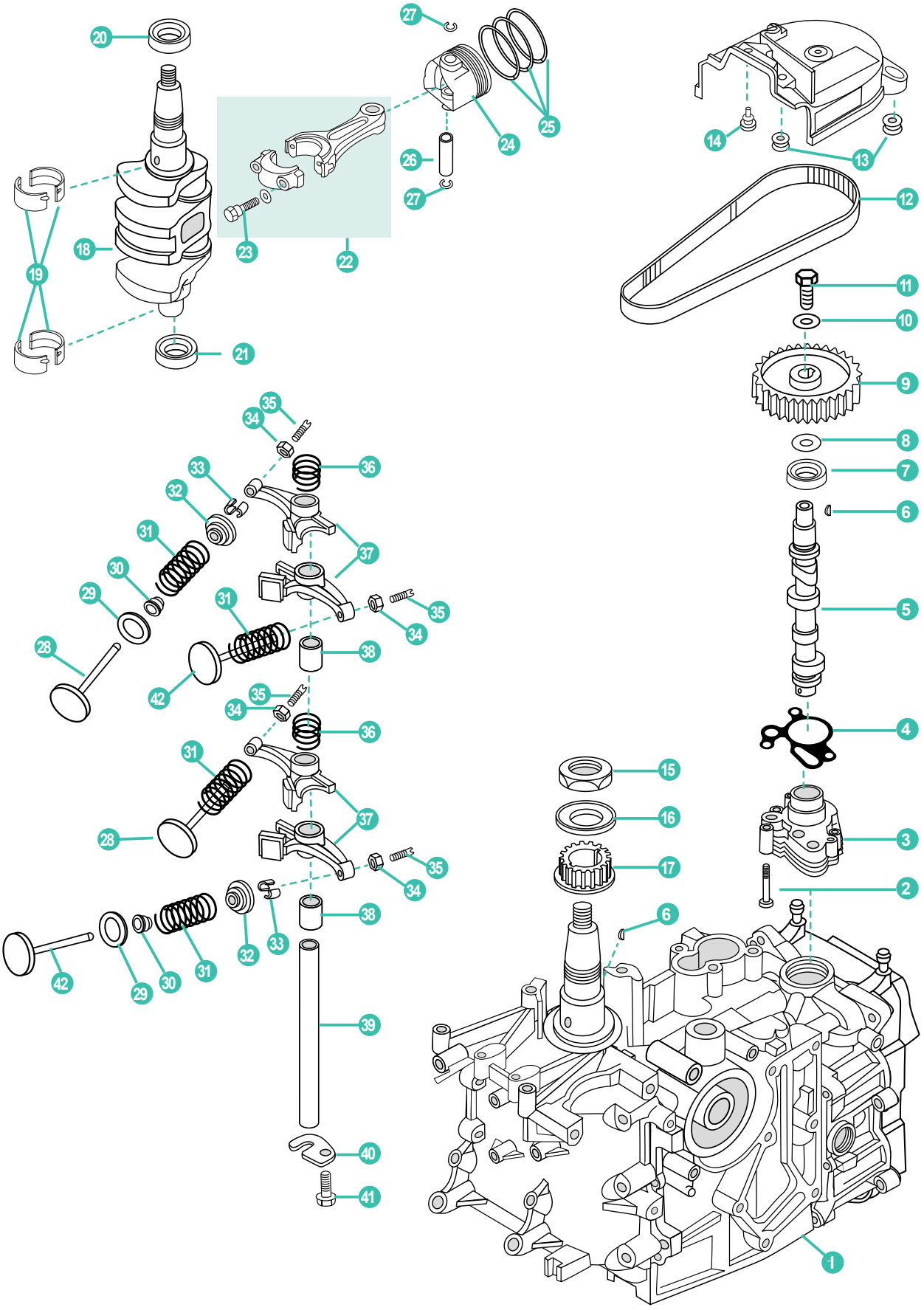
20
27
25
24
26
27
23
22
18
19
21
14
13
12
11
10
9
8
7
6
5
4
3
2
15
16
17
6
1
35
34
36
33
32
37
31
30
29
28
35
34
38
42
35
34
36
31
37
28
35
34
38
32
33
42
29
30
31
39
40
41

	REF	OEM					UN.
1	PAF20-05000000	6AH-W009B-02-1S	CILINDRO BLOQUE COMPLETO	POWER HEAD ASSY	BLOCCO COMPLETO	TÊTE MOTRICE	1
2	PAGB/T5783-M6X35	90105-06035	TORNILLO	SCREW	VITE	VIS	3
3	PAF20-05030400	6AH-13300-00	BOMBA DE ACEITE	OIL PUMP	POMPA DELL'OLIO	POMPE À HUILE	1
4	PAF20-05030010	6AH-13329-10	JUNTA TAPA	GASKET, COVER	GAURNIZIONE COPERCHIO	JOINT COUVERCLE	1
5	PAF20-05030200	6AH-12170-00	ÁRBOL DE LEVAS	CAMSHAFT ASSY	ALBERO A CAMME	ARBRE À CAMES	1
6	PAGB/T1099-3X5X13	90280-03M01	CUÑA	KEY WOODRUFF	CHIAVETTA	CLAVETTE	2
7	PAF20-05030005	93102-22010	RETÉN DE ACEITE	OIL SEAL	PARAOLIO	JOINT D'HUILE	1
8	PAF20-05030011	90201-15423	ARANDELA	WASHER	RONDELLA	RONDELLE	1
9	PAF20-05030012	6AH-11537-00	POLEA DE CORREA	BELT PULLEY, DRIVEN	PULEGGIA CINGHIA	POULIE DE COURROIE	1
10	PAF20-05030013	90201-08784	ARANDELA	WASHER	RONDELLA	RONDELLE	1
11	PAGB/T5783-M8X25	90105-081A7	TORNILLO	SCREW	VITE	VIS	1
12	PAF20-05000003	6AH-46241-00	CORREA	BELT	CINGHIA	COURROIE	1
13	PAF20-05000034	90480-10627	TAPÓN	CAP	TAPPO	BOUCHON	3
14	PAF20-05000036	90480-06M19	TAPÓN	CAP	TAPPO	BOUCHON	1
15	PAF20-05000029	90170-30003	TUERCA	NUT	DADO	ÉCROU	1
16	PAF20-05000028	6AH-11557-00	ARANDELA	WASHER	RONDELLA	RONDELLE	1
17	PAF20-05000027	6AH-11536-00	ENGRANAJE DE DISTRIBUCIÓN	BELT PULLEY, TIMING	PULEGGIA DE DISTRIBUZIONE	POULIE DE DISTRIBUTION	1
18	PAF20-05020004	6AH-11411-00	CIGÜEÑAL	CRANK ASSY	ALBERO MOTORE	VILEBREQUIN	1
19	PAF20-05010003	6AH-11416-00	COJINETE BANCADA	MAIN BEARING	CUSCINETTO	PALIER DE VILEBREQUIN	1
20	PAF25-05050021	93102-37004	RETÉN DE ACEITE	OIL SEAL	PARAOLIO	JOINT D'HUILE	1
21	PAF15-07030006	93102-25014	RETÉN DE ACEITE	OIL SEAL	PARAOLIO	JOINT D'HUILE	1
22	PAF20-05020200	6AH-11650-10	BIELA	ROD, CONNECTING	BIELLA	BIELLE	2
23	PAF25-05020204	6AH-11654-00	TORNILLO	SCREW	VITE	VIS	2
24	PAF20-05020001	6AH-11631-00	PISTÓN **STD**	PISTON **STD**	PISTONE **STD**	PISTON **STD**	2
25	PAF20-05020100	6AH-11603-00	KIT SEGMENTOS DE PISTÓN **STD**	PISTON RING KIT **STD**	KIT FASCIA PISTONE **STD**	KIT SEGMENTS **STD**	2
26	PAF20-05020003	137-11633-10	PIN, PISTÓN	PIN, PISTON	SPINOTTO PISTONE	AXE DE PISTON	2
27	PAF20-05020002	93450-17129	CIRCLIP	CIRCLIP	CIRCLIP	CIRCLIP	4
28	PAF20-05030001	6AH-12111-00	VÁLVULA ADMISIÓN	VALVE, INTAKE	VALVOLA ASPIRAZIONE	SOUPAPE D ADMISSION	2
29	PAF20-05030003	62Y-12116-00	ARANDELA DE ASIENTO	SEAT, VALVE SPRING	RONDELLA BASAMENTO	SIEGE RESSORT DE SOUPAPE	4
30	PA166F-010003	51Y-12119-00	RETÉN DE ACEITE	OIL SEAL	PARAOLIO	JOINT D'HUILE	4
31	PAF20-05030004	3YF-12113-00	MUELLE DE VÁLVULA	SPRING, VALVE STEM	MOLLA DI VALVOLA	RESSORT DE SOUPAPE	4
32	PAF15-07040006	30X-12117-00	RETÉN RESORTE	SPRING, VALVE RETAINER	VALVOLA DI RITEGNO	JOINT DE RESSORT	4
33	PAF15-07040007	30X-12118-00	SEGURO DE VÁLVULA	CLAMP, VALVE	BLOCCAGGIO DI VALVOLA	CLAVETTE DE SOUPAPE	8
34	PAF15-07040304	62Y-12158-00	TUERCA	LOCK NUT	DADO	ÉCROU	4
35	PAF15-07040303	64J-12159-00	TORNILLO REGULADOR	SCREW, VALVE ADJUSTING	VITE REGOLATORE	VIS POINTEAU	4
36	PAF20-05030007	90501-120A5	RESORTE DE COMPRESIÓN	SPRING, ROCKER	MOLLA	RESSORT ROCKER	2
37	PAF20-05030301	6AH-12151-00	BRAZO DE BALANCÍN	ARM, VALVE ROCKER	BILANCERE	CULBUTEUR	4
38	PAF20-05030006	90387-13006	ESPACIADOR	COLLAR	DISTANZIALE	ENTRETOISE	2
39	PAF15-07040015	66M-12146-00	EJE DE BALANCÍN	SHAFT, ROCKER	ASSE DE BILANCERE	AXE DE CULBUTEUR	1
40	PAF20-05030008	6AH-12279-00	PLACA	PLATE	PIASTRA	PLAQUE	1
41	PAGB/T5783-M6X12	97013-06012	TORNILLO	SCREW	VITE	VIS	1
42	PAF20-05030002	6AH-12121-10	VÁLVULA ESCAPE	VALVE, EXHAUST	VALVOLA SCARICO	SOUPAPE D'ECHAPPEMENT	2

4T STROKES FT • F20 • F25 (1998-08)

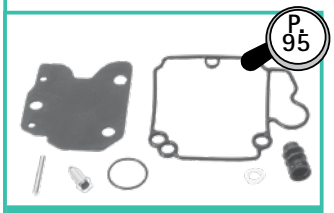

REF	OEM
REC8542561	65W-W0093-02

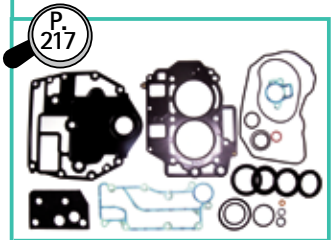

REF	OEM
REC65W-W0001-00	65W-W0001-02

	REF	OEM					UN.
1	PAF25-05000007	65W-15121-00	TAPA	COVER	COPERCHIO	COUVERCLE	1
2	PAGBT3452.1-97.5X1.8	65W-15663-00	JUNTA	SEAL	GUARNIZIONE	JOINT	1
3	PAGB/T5783-M6X20	65W-12228-00	TORNILLO	BOLT, HEXAGON	VITE	VIS	4
4	PAGB/T97.1-8	66M-11356-00	ARANDELA	WASHER 6	RONDELLA	RONDELLE	17
5	PAF25-05010000	65W-15100-00-94	BLOQUE MOTOR COMPLETO	CRANKCASE ASSY	BLOCCO MOTORE COMPLETO	CARTER BLOC MOTEUR	1
6	PAF25-00000014	99530-08012	PIN CENTRADOR	HOLLOW PIN	SPINOTTO DI CENTRAGGIO	PIN DE CENTRAGE	2
7	PAGB/T5782-M8X80	90119-08M01	TORNILLO	BOLT, HEXAGON	VITE	VIS	6
8	PAGB/T97.1-8	97595-06520	ARANDELA	WASHER	RONDELLA	RONDELLE	7
9	PAGB/T5782-M6X35	90119-06MA5	TORNILLO	BOLT, HEXAGON	VITE	VIS	6
10	PAF25-00000013	65W-11351-00	JUNTA BASE MOTOR	GASKET ENGINE	GUARNIZIONE BASE MOTORE	JOINT MOTEUR	1
11	PAF25-05010111	65W-41114-00	JUNTA EXTERIOR, TAPA DE ESCAPE	GASKET, EXHAUST OUTER COVER	GUARNIZIONE ESTERIORE, COPERCHIO SCARICO	JOINT DE COUVERCLE EXT ECHAPPEMENT	1
12	PAF25-05010112	65W-41113-01-94	TAPA EXTERIOR DE ESCAPE	OUTTER COVER, EXHAUST	COPERCHIO SCARICO	COUVERCLE D'ECHAPPEMENT	1
13	PAF15-07010003	90401-20M00	TORNILLO	BOLT, UNION	VITE	VIS	1
14	PAF25-05000100	5GH-13440-00	FILTRO ACEITE	OIL FILTER	FILTRO DELL'OLIO	FILTRE À HUILE	1
14	REC5GH-13440-00	5GH-13440-00	FILTRO ACEITE	OIL FILTER	FILTRO DELL'OLIO	FILTRE À HUILE	1
15	PAGB/T5783-M6X35	90119-06MAS	TORNILLO	BOLT	VITE	VIS	7
16	PAF15-07000031	6G8-12411-02	TERMOSTATO	THERMOSTAT	TERMOSTATO	THERMOSTAT	1
17	PAF15-07010022	62Y-12414-00	JUNTA TAPA TERMOSTATO	GASKET, THERMOSTAT COVER	GUARNIZIONE COPERCHIO TERMOSTATO	JOINT COUVERCLE DE THERMOSTAT	1
18	PAF15-07010021	6H3-12413-00-9M	TAPA TERMOSTATO	COVER, THERMOSTAT	COPERCHIO TERMOSTATO	COUVERCLE DE THERMOSTAT	1
19	PAGB/T5783-M6X25	90119-06MA5	TORNILLO	BOLT	VITE	VIS	2
20	PAF25-05010113	62Y-11372-01	NIPLE DE MANGUERA	NIPPLE	TUBO	RACCORD D'EAU	1
21	PAHT-2.5x60	90465-11M10	BRIDA	CLAMP	FLANGIA	COLLIER	5
22	PAF25-03000008	90445-09068	TUBO DE AGUA	WATER TUBE	TUBO DELL'ACQUA	DURITE D'EAU	1
23	PAF15-05000011	688-24378-00	CONECTOR DE 3 VÍAS	THREE-WAY PIPE	CONNETTORE T	TE	1
24	PAF25-03000009	90445-09095	TUBO DE AGUA	WATER TUBE	TUBO DELL'ACQUA	DURITE D'EAU	1
25	PAF25-03000011	90445-09105	TUBO DE AGUA	WATER TUBE	TUBO DELL'ACQUA	DURITE D'EAU	1
26	PAF4-04000030	90467-09M09	MUELLE TUBO COMBUSTIBLE **B**	SPRING, FUEL PIPE **B**	MOLLA TUBO COMBUSTIBILE **B**	RESSORT, TUYAU DE CARBURANT	1
27	PAF25-05040000	65W-11181-30	JUNTA CULATA	GASKET, CYLINDER HEAD	GUARNIZIONE TESTATA	JOINT DE CULASSE	1
28	PAGB/T5782-M8X35	65W-08M87	TORNILLO	BOLT, HEXAGON	VITE	VIS	1
29	PAF25-05010106	66W-11119-00	SOPORTE	HANGER, ENGINE	SUPPORTO	CROCHET LEVAGE MOTEUR	1
30	PAF15-04000003	90430-14M09	ARANDELA	WASHER	RONDELLA	RONDELLE	1
31	PAF15-04000002	90340-14M06	TORNILLO DRENAJE	BOLT, DISCHARGING OIL	VITE DRENAGGIO	VIS DE VIDANGE	1
32	PAF25-05010107	65W-13286-00	FILTRO ACEITE	OIL FILTER	FILTRO DELL'OLIO	FILTRE À HUILE	1
33	PAF25-05010108	65W-11169-00	JUNTA DE CUBIERTA	GASKET, BREATHER	GUARNIZIONE COPERCHIO	JOINT DE PLAQUE	1
34	PAF25-05010103	65W-11168-00	CUBIERTA DE RESPIRADERO	COVER, BREATHER	COPERCHIO	PLAQUE	1
35	PAGB/T5783-M6X20	65W-12228-00	TORNILLO	BOLT, HEXAGON	VITE	VIS	4
36	PAF25-00000014	99530-08012	PIN CENTRADOR	HOLLOW PIN	SPINOTTO DI CENTRAGGIO	PIN DE CENTRAGE	2
37	PAF25-05050100	65W-11111-02-94	CULATA	CYLINDER HEAD	TESTATA	CULASSE	1
38	PAF25-05050007	90430-06014	JUNTA	GASKET	GUARNIZIONE	JOINT	1
39	PAF25-05050006	90109-06M65	TORNILLO	BOLT	VITE	VIS	1
40	PAF25-05000004	65W-11356-00	JUNTA TAPA	GASKET, COVER	GAURNIZIONE COPERCHIO	JOINT COUVERCLE	1
41	PAGB/T97.1-8		ARANDELA	WASHER, PLATE	RONDELLA	RONDELLE	10
42	PAGB/T5783-M6X25	90119-06MA3	TORNILLO	BOLT, HEXAGON	VITE	VIS	6
43	PAF25-05000003		ARANDELA	WASHER, PLATE	RONDELLA	RONDELLE	10
44	PAF25-05000002	90119-09M00	TORNILLO	BOLT, FLANGE	VITE	VIS	9
45	NGKDPR7EA-9	94701-00375	BUJÍA	SPARK-PLUG	CANDELA	BOUGIE	2
46	PAJASOF40431-025	93210-24M79	TÓRICA	O-RING	O-RING	TORIQUE	1
47	PAF15-07050004	6G8-15363-00	TAPÓN ACEITE	PLUG, OIL	TAPPO OLIO	BOUCHON REMPLISSAGE D'HUILE	1
48	PAF25-05000005	65W-11191-00-94	TAPA BALANCINES	COVER, CYLINDER HEAD	COPERCHIO PUNTERIE	CACHE CULBUTEUR	1
49	PAGB/T5783-M6X20	90119-06MA3	TORNILLO	BOLT, HEXAGON	VITE	VIS	5
50	PAF25-02010005	62Y-11325-00	ÁNODO	ANODE	ANODO	ANODE	2
51	PAF15-07010009	66M-11328-00	ALOJAMIENTO ÁNODO	GROMMET, ANODE	ALLOGGIAMENTO ANODO	JOINT D'ANODE	2
52	PAF15-07010011	66M-11327-00-94	TAPA	COVER, ANODE	COPERTURA ANODO	COUVERCLE DU ANODE	2
53	PAGB/T97.1-5	92995-05600	ARANDELA	WASHER, PLATE	RONDELLA	RONDELLE	2
54	PAGB/T5783-M5X12	97095-05012	TORNILLO	BOLT, HEXAGON	VITE	VIS	2
55	PAF15-07010012	66M-12535-00	PLETINA	PLATE, ANODE	PIASTRA ANODO	PLAQUE	2
56	PAGB/T5783-M6X20	97095-06020	TORNILLO	BOLT, HEXAGON	VITE	VIS	2

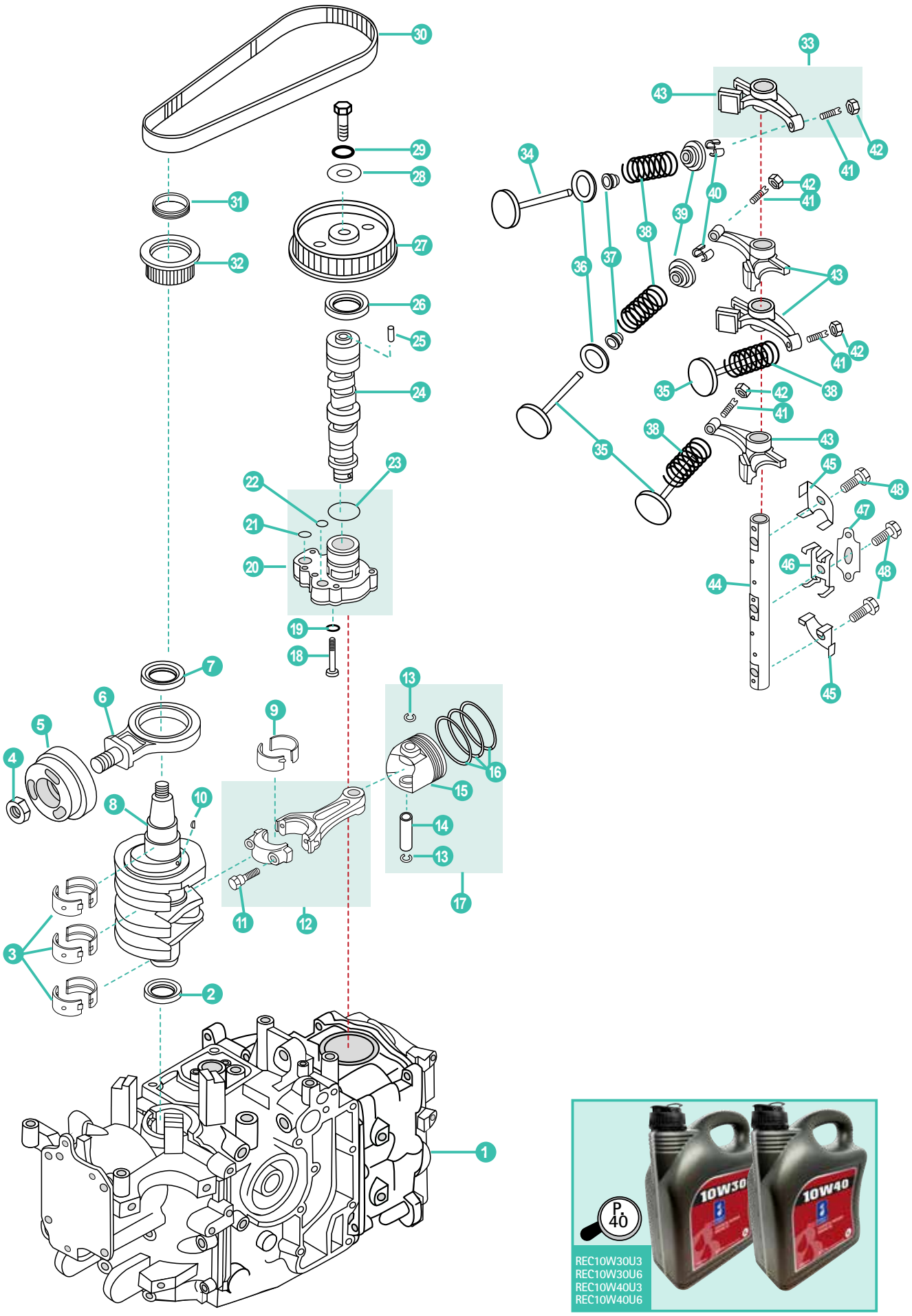
30
29
28
31
32
27
26
25
24
23
22
21
20
19
18
7
6
5
4
8
10
9
13
16
15
14
13
17
11
12
3
2
1
33
43
42
41
34
42
41
40
39
38
36
37
43
42
41
35
42
38
41
38
43
35
45
48
47
46
48
44
45

10W30
10W40
P. 40
REC10W30U3
REC10W30U6
REC10W40U3
REC10W40U6

	REF	OEM					UN.
1	POWERHEAD20-25		MOTOR	COMPLETE, POWER	BLOCCO COMPLETO	TÊTE MOTRICE	1
2	PAF25-05020002	93102-35M47	RETÉN	OIL-SEAL	GUARNIZIONE	JOINT D'HUILE	1
3	PAF25-05010302-1	62Y-11416-00	COJINETE BANCADA **BROWN**	MAIN BEARING **BROWN**	CUSCINETTO **BROWN**	PALIER DE VILEBREQUIN **BROWN**	6
3	PAF25-05010302-2	62Y-11416-10	COJINETE BANCADA **BLACK**	MAIN BEARING **BLACK**	CUSCINETTO **BLACK**	PALIER DE VILEBREQUIN **BLACK**	6
4	PAF25-05000026	90170-35M47	TUERCA	LOCK NUT	DADO	ÉCROU	1
5	PAF25-05020301	65W-11642-11	PISTÓN, CONTRA	PISTON, BALANCE	PISTONE, CONTRO	PISTON D'EQUILIBRAGE	1
6	PAF25-05020310	65W-11665-00	BIELA, CONTRO	CON-ROD ASSY, BALANCE	BIELLA, CONTRO	BIELLE D'EQUILIBRAGE	
7	PAF25-05020003	93102-43M42	RETÉN	OIL SEAL	PARAOLIO	JOINT SPI	1
8	PAF25-05020001	65W-11411-01	CIGÜEÑAL	CRANK ASSY	ALBERO MOTORE	VILEBREQUIN	1
9	PAF25-05020203-1	62Y-11656-00	COJINETE BIELA	BEARING, CONNECTING ROD	CUSCINETTO BIELLA	PALIER DE BIELLE	2
9	PAF25-05020203-2	62Y-11656-00	COJINETE BIELA	BEARING, CONNECTING ROD	CUSCINETTO BIELLA	PALIER DE BIELLE	2
10	PAF4-04000019	90280-04M06	CUÑA	KEY WOODRUFF	CHIAVETTA	CLAVETTE	1
11	PAF25-05020204	62Y-11654-00	TORNILLO	BOLT, CONNECTING ROD	VITE	VIS	2
12	PAF25-05020200	67C-11650-00	BIELA	CONNECTING ROD	BIELLA	BIELLE	2
13	PAF25-05020106	93450-17129	CLIP	CIRCLIP	CLIP	CIRCLIP	4
14	PAF25-05020105	62Y-11633-00	PIN, PISTÓN	PIN, PISTON	SPINOTTO PISTONE	AXE DE PISTON	2
15	PAF25-05020101	65W-11631-00-96	PISTÓN	PISTON	PISTONE	PISTON	2
16	REC67C-11603-00	67C-11603-00	KIT SEGMENTOS DE PISTÓN	PISTON RING KIT	KIT FASCIA PISTONE	KIT SEGMENTS	2
17	PAF25-05020100		PISTÓN COMPLETO	PISTON ASSY	PISTONE COMPLETO	PISTON COMPLÈTE	2
18	PAGB/T5782-M6X125	97013-06035	TORNILLO	BOLT	VITE	VIS	4
19	PAGB/T97.1-8	66M-11328-00	ARANDELA	WASHER , PLATE	RONDELLA	RONDELLE	4
20	PAF25-05050400	65W-13300-00	BOMBA ACEITE COMPLETA	OIL PUMP ASSY	POMPA DELL'OLIO COMPLETA	POMPE À HUILE COMPLÈTE	1
21	PAF25-05050014	93210-14515	TÓRICA **B**	O-RING **B**	O-RING **B**	JOINT TORIQUE B	1
22	PAF25-05050013	93210-12MG9	TÓRICA **A**	O-RING **A**	O-RING **A**	JOINT TORIQUE A	1
23	PAF25-05050015	93210-33MH2	TÓRICA **C**	O-RING **C**	O-RING **C**	JOINT TORIQUE C	1
24	PAF25-05050200	65W-12171-10	ÁRBOL DE LEVAS	CAMSHAFT ASSY	ALBERO A CAMME	ARBRE À CAMES	1
25	PAF25-05050016	93605-14143	PIN CENTRADOR	HOLLOW PIN	SPINOTTO DI CENTRAGGIO	PIN DE CENTRAGE	1
26	PAF25-05050021	93102-37M40	RETÉN	OIL SEAL	PARAOLIO	JOINT SPI	1
27	PAF25-05050017	65W-11537-01	POLEA DE CORREA	BELT PULLEY, DRIVEN	PULEGGIA CINGHIA	POULIE DE COURROIE	1
28	PAF25-05050018	90201-10M06	ARANDELA	WASHER, PLATE	RONDELLA	RONDELLE	1
29	PAGB/T97.1-8		ARANDELA	WASHER, PLATE	RONDELLA	RONDELLE	1
30	REC65W-46241-00	65W-46241-00	CORREA DISTRIBUCIÓN	BELT, TIMING	CINGHIA DISTRIBUZIONE	COURROIE DISTRIBUTION	1
31	PAF25-05000022	65W-11476-00	MUELLE	BUSH, SPRING	MOLLA	RESSORT	1
32	PAF25-05000021	65W-11536-10	ENGRANAJE DE DISTRIBUCIÓN	BELT PULLEY, TIMING	PULEGGIA DE DISTRIBUZIONE	POULIE DE DISTRIBUTION	1
33	PAF25-05050300		BALANCÍN COMPLETO	ROCKET ASSY	BILANCERE COMPLETO	CULBUTEUR COMPLÈTE	4
34	PAF25-05050002	62Y-12121-00	VÁLVULA ESCAPE	VALVE, EXHAUST	VALVOLA SCARICO	SOUPAPE D'ECHAPPEMENT	2
35	PAF25-05050001	67C-12111-00	VÁLVULA ADMISIÓN	VALVE, INTAKE	VALVOLA ASPIRAZIONE	SOUPAPE D'ADMISSION	2
36	PAF25-05050003	62Y-12116-00	ARANDELA ASIENTO	SEAT, VALVE SPRING	RONDELLA BASAMENTO	SIEGE RESSORT DE SOUPAPE	4
37	PAF166-010003	51Y-12119-00	RETÉN DE ACEITE	OIL SEAL	PARAOLIO	JOINT D'HUILE	4
38	PAF25-05050005	51Y-12114-00	MUELLE DE VÁLVULA	SPRING, VALVE STEM	MOLLA DI VALVOLA	RESSORT DE SOUPAPE	4
39	PAF15-07040006	30X-12117-00	RETÉN RESORTE	SPRING, VALVE RETAINER	VALVOLA DI RITEGNO	JOINT DE RESSORT	4
40	PAF15-07040007	30X-12118-00	SEGURO DE VÁLVULA	CLAMP, VALVE	BLOCCAGGIO DI VALVOLA	CLAVETTE DE SOUPAPE	8
41	PAF15-07040303	62Y-12159-00	TORNILLO REGULADOR	SCREW, VALVE ADJUSTING	VITE REGOLATORE	VIS POINTEAU	4
42	PAF15-07040304	62Y-12158-00	TUERCA	NUT	GHIERA	ÉCROU	4
43	PAF25-05050301	65W-12151-00	BALANCÍN	VALVE ROCKER	BILANCERE	CULBUTEUR	4
44	PAF25-05050008	65W-12146-00	EJE DE BALANCÍN	SHAFT, ROCKER	ASSE BILANCERE	AXE DE CULBUTEUR	1
45	PAF25-05050009	62Y-12238-00	PLETINA	PLATE, BOLT STOPPER	PIASTRINA	PLAQUE	2
46	PAF25-05050011	62Y-12216-00	RESORTE	SPRING	MOLLA	RESSORT	1
47	PAF25-05050012	62Y-12231-00	PLETINA	PLATE B, BOLT STOPPER	PIASTRINA	PLAQUE	1
48	PAF25-05050019	90109-08M63	TORNILLO	BOLT	VITE	VIS	

4T STROKES F25D/M • F20D • FT25F

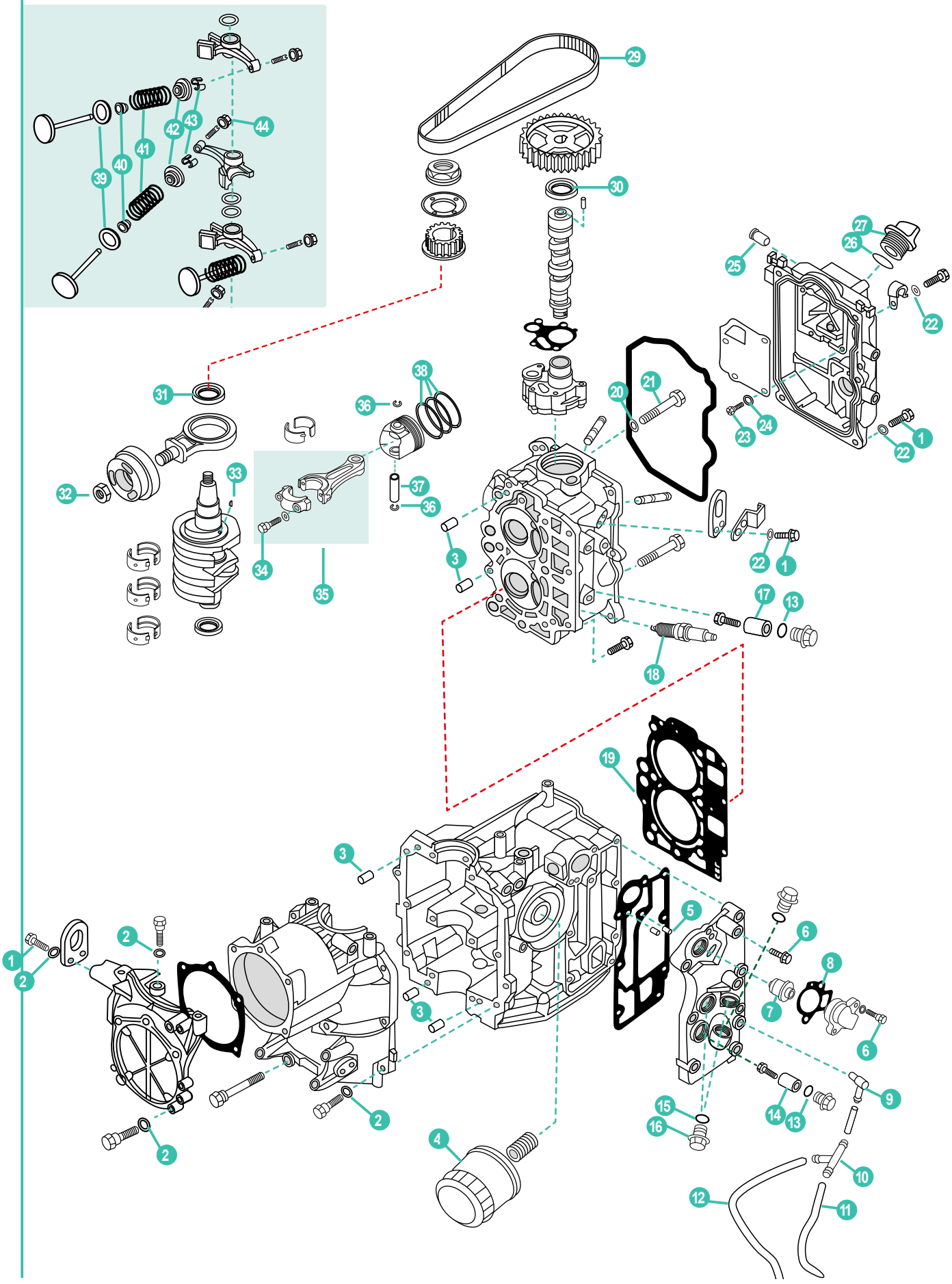

	REF	OEM					UN.
1	PAGB/T5783-M6X20	97095-06020	TORNILLO	SCREW	VITE	VIS	9
2	PAGB/T97.1-6	92995-06600	ARANDELA	WASHER	RONDELLA	RONDELLE	16
3	REC93606-12019	93606-12019	PIN CENTRADOR	HOLLOW PIN	SPINOTTO DI CENTRAGGIO	PIN DE CENTRAGE	5
4	REC5GH-13440-60	5GH-13440-20	FILTRO ACEITE	OIL FILTER	FILTRO DELL'OLIO	FILTRE À HUILE	1
5	PAF25-04000007	93604-10M03	PIN CENTRADOR	HOLLOW PIN	SPINOTTO DI CENTRAGGIO	PIN DE CENTRAGE	2
6	PAGB/T5783-M6X30	90119-06MA5	TORNILLO	SCREW	VITE	VIS	8
7	PAF15-07000031	6G8-12411-03	TERMOSTATO	THERMOSTAT	TERMOSTATO	THERMOSTAT	1
8	PAF15-07010022	62Y-12414-00	JUNTA TAPA TERMOSTATO	GASKET, THERMOSTAT COVER	GUARNIZIONE COPERCHIO TERMOSTATO	JOINT COUVERCLE DE THERMOSTAT	1
9	PAF15-04000005	676-11372-00	NIPLE DE MANGUERA	NIPPLE	TUBO	RACCORD D'EAU	1
10	PAF15-05000011	688-24378-00	CONECTOR DE 3 VÍAS	THREE-WAY PIPE	CONNETTORE T	TE	1
11	PAF25-03000011	90445-09251	TUBO DE AGUA	WATER TUBE	TUBO DELL'ACQUA	DURITE D'EAU	1
12	PAF25-03000009	90445-09104	TUBO DE AGUA	WATER TUBE	TUBO DELL'ACQUA	DURITE D'EAU	1
13	PAGB/T3452.1-13X2	93210-13M63	TÓRICA	O-RING	O-RING	JOINT TORIQUE	1
14	CM6G8-11325-00A	6G8-11325-00	ÁNODO	ANODE	ANODO	ANODE	1
15	PAF15-04000003	90430-14115	TÓRICA	O-RING	O-RING	JOINT TORIQUE	2
16	PAF15-04000002	90340-14M06	TORNILLO DRENAJE	BOLT, DISCHARGING OIL	VITE DRENAGGIO	BOUCHON DE VIDANGE	2
17	CM6BL-11325-00A	6BL-11325-00	ÁNODO	ANODE	ANODO	ANODE	2
18	NGKDPR6EB-9	94702-00418	BUJÍA	SPARK PLUG	CANDELE	BOUGIE	2
19	REC6BL-11181-00	6BL-11181-00	JUNTA CULATA	GASKET, CYLINDER HEAD	GUARNIZIONE TESTATA	JOINT DE CULASSE	1
20	PAF25-05050007	90430-06014	JUNTA	GASKET	GUARNIZIONE	JOINT	1
21	PAF25-05050006	90109-06M65	PERNO	STUD	BULLONE	BOULON	1
22	PAGB/T96-6	92995-06600	ARANDELA	WASHER	RONDELLA	RONDELLE	8
23	PAGB/T818-M4X10	98507-04010	TORNILLO	SCREW	VITE	VIS	4
24	PAGB/T97.1-4	92907-04600	ARANDELA	WASHER	RONDELLA	RONDELLE	4
25	PAF20-05040005	62Y-14485-00	PIPA DE AGUA	PIPE, WATER	TUBO	RACCORD TUYAU D'EAU	1
26	PAJASOF40431-025	93210-24M79	TÓRICA	O-RING	O-RING	JOINT TORIQUE	1
27	PAF15-07050004	6G8-15363-00	TAPÓN ACEITE	PLUG, OIL	TAPPO OLIO	BOUCHON REMPLISSAGE D'HUILE	1
28	PAF15-07010015	90465-08M83	BRIDA	CLAMP	FLANGIA	COLLIER	1
29	REC6C5-46241-00	6C5-46241-00	CORREA DISTRIBUCIÓN	BELT, TIMING	CINGHIA DISTRIBUZIONE	COURROIE DISTRIBUTION	1
30	PAF25-05050021	93102-37M40	RETÉN DE ACEITE	OIL SEAL	PARAOLIO	JOINT SPI	1
31	PAF25-05020003	93102-43M42	RETÉN DE ACEITE	OIL SEAL	PARAOLIO	JOINT SPI	1
32	PAF25-05000026	90170-20137	TUERCA	LOCK NUT	DADO	ÉCROU	1
33	PAGB/T1099-3X5X13	90280-03M01	CUÑA	KEY WOODRUFF	CHIAVETTA	CLAVETTE	1
34	PAF25-05020204	6C5-11654-00	TORNILLO	SCREW	VITE	VIS	2
35	PAF25-05020200	6C5-11650-00	BIELA COMPELTA	ROD, CONNECTING ASSY	BIELLA COMPLETA	BIELLE COMPLÈTE	2
36	PAF25-05020106	93450-17129	CIRCLIP	CIRCLIP	CIRCLIP	CIRCLIP	4
37	PAF25-05020105	62Y-11633-00	PIN, PISTÓN	PIN, PISTON	SPINOTTO PISTONE	AXE DE PISTON	2
38	REC67C-11603-00	67C-11603-00	KIT SEGMENTOS DE PISTÓN	PISTON RING KIT	KIT FASCIA PISTONE	KIT SEGMENTS	2
39	PAF25-05050003	62Y-12116-00	ARANDELA ASIENTO	SEAT, VALVE SPRING	RONDELLA BASAMENTO	SIEGE RESSORT DE SOUPAPE	4
40	PA166F-010003	51Y-12119-00	RETÉN DE ACEITE	OIL SEAL	PARAOLIO	JOINT D'HUILE	4
41	PAF25-05050005	51Y-12114-00	MUELLE DE VÁLVULA	SPRING, VALVE STEM	MOLLA DI VALVOLA	RESSORT DE SOUPAPE	4
42	PAF15-07040006	30X-12117-00	RETÉN RESORTE	SPRING, VALVE RETAINER	VALVOLA DI RITEGNO	JOINT DE RESSORT	4
43	PAF15-07040007	30X-12118-00	SEGURO DE VÁLVULA	CLAMP, VALVE	BLOCCAGGIO DI VALVOLA	CLAVETTE DE SOUPAPE	8
44	PAF15-07040304	62Y-12158-00	TUERCA	NUT	GHIERA	ÉCROU	1



REC10W30U3
REC10W30U6
REC10W40U3
REC10W40U6

SAV

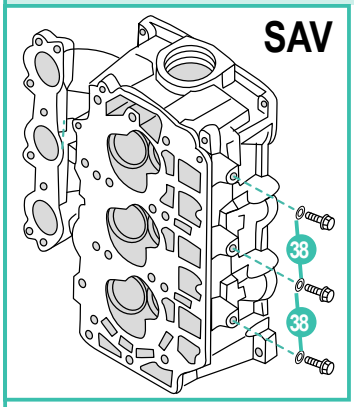
38
38

25
27
26
24
20
21
21
22
23
28
29
6
19
30
31
36
37
32
33
34
35
29
28
18
17
5
4
6
16
15
14
9
13
12
9
11
9
10
7
8
3
2
1

	REF	OEM					UN.
1	PAF15-07000030	97013-06035	PERNO	STUD	BULLONE	BOULON	8
2	PAGB/T97.1-6	92903-06600	ARANDELA	WASHER	RONDELLA	RONDELLE	8
3	REC67C-11351-00	67C-11351-01	JUNTA BASE MOTOR	GASKET ENGINE	GUARNIZIONE BASE MOTORE	JOINT MOTEUR	1
4	PAF15-04000002	90340-14M06	TORNILLO DRENAJE	BOLT, DISCHARGING OIL	VITE DRENAGGIO	BOUCHON DE VIDANGE	1
5	PAF15-04000003	90430-14115	TÓRICA	O-RING	O-RING	JOINT TORIQUE	1
6	PAF25-00000014	99530-08012	PIN CENTRADOR	HOLLOW PIN	SPINOTTO DI CENTRAGGIO	PIN DE CENTRAGE	4
7	PAF15-07010003	90401-20M00	PERNO	STUD	BULLONE	BOULON	1
8	REC5GH-13440-00	5GH-13440-00	FILTRO ACEITE	OIL FILTER	FILTRO DELL'OLIO	FILTRE À HUILE	1
9	PAHT-2.5X60	90465-11M10	BRIDA	CLAMP	FLANGIA	COLLIER	5
10	PAF25-03000008	90445-09068	TUBO DE AGUA	WATER TUBE	TUBO DELL'ACQUA	DURITE D'EAU	1
11	PAF15-05000011	688-24378-00	CONECTOR DE 3 VÍAS	THREE-WAY PIPE	CONNETTORE T	TE	1
12	PAF15-05000014	90445-09104	TUBO DE AGUA	WATER TUBE	TUBO DELL'ACQUA	DURITE D'EAU	1
13	PAF25-03000009	90445-09095	TUBO DE AGUA	WATER TUBE	TUBO DELL'ACQUA	DURITE D'EAU	1
14	PAF15-07010021	6H3-12413-00-1S	TAPA TERMOSTATO	COVER, THERMOSTAT	COPERCHIO TERMOSTATO	COUVERCLE DE THERMOSTAT	1
15	PAF15-07010022	62Y-12414-00	JUNTA TAPA TERMOSTATO	GASKET, THERMOSTAT COVER	GUARNIZIONE COPERCHIO TERMOSTATO	JOINT COUVERCLE DE THERMOSTAT	1
16	PAF15-07000031	6G8-12411-03	TERMOSTATO	THERMOSTAT	TERMOSTATO	THERMOSTAT	1
17	REC67C-41114-00	67C-41114-10	JUNTA EXTERIOR, TAPA DE ESCAPE	GASKET, EXHAUST OUTER COVER	GUARNIZIONE ESTERIORE, COPERCHIO SCARICO	JOINT DE COUVERCLE EXT ECHAPPEMENT	1
18	PAF25-05010106	65W-11119-00	SOPORTE	HANGER, ENGINE	SUPPORTO	CROCHET LEVAGE MOTEUR	1
19	REC67C-11181-01	67C-11181-01	JUNTA CULATA	GASKET, CYLINDER HEAD	GUARNIZIONE TESTATA	JOINT DE CULASSE	1
20	PAGB/T5783-M6X10	97095-06010	TORNILLO	SCREW	VITE	VIS	3
21	PAF25-05050007	90430-06014	JUNTA	GASKET	GUARNIZIONE	JOINT	3
22	PAF25-05050006	90109-06M65	PERNO	STUD	BULLONE	BOULON	1
23	REC67C-11356-00	67C-11356-00	JUNTA TAPA	GASKET, COVER	GAURNIZIONE COPERCHIO	JOINT COUVERCLE	1
24	PAGB/T818-M4X10	98507-04010	TORNILLO	SCREW	VITE	VIS	4
25	PAF40-05070002	62Y-14485-00	PIPA DE AGUA	PIPE, WATER	TUBO	RACCORD TUYAU D'EAU	1
26	PAJASOF40431-025	93210-24M79	TÓRICA	O-RING	O-RING	JOINT TORIQUE	1
27	PAF15-07050004	6G8-15363-00	TAPÓN ACEITE	PLUG, OIL	TAPPO OLIO	BOUCHON REMPLISSAGE D'HUILE	1
28	PAGB/T5783-M6X20	97095-06020	PERNO	STUD	BULLONE	BOULON	7
29	PAGB/T97.1-6	92995-06600	ARANDELA	WASHER	RONDELLA	RONDELLE	7
30	NGKDPR6EA-9	94701-00375	BUJÍA	SPARK PLUG	CANDELA	BOUGIE	3
31	PAF25-05000002	90119-09M00	TORNILLO	SCREW	VITE	VIS	8
32	PAF15-07010009	66M-11328-00	TAPÓN	PLUG	TAPPO	BOUCHON	3
33	CM62Y-11325-00A	62Y-11325-00	ÁNODO	ANODE	ANODO	ANODE	3
34	PAF15-07010011	66M-11327-00-94	TAPA ÁNODO	COVER, ANODE	COPERTURA ANODO	COUVERCLE D'ANODE	3
35	PAF15-07010012	66M-12535-00	PLETINA DEL ÁNODO	PLATE, ANODE	PIASTRA ANODO	PLAQUE D'ANODE	3
36	PAGB/T97.1-5	92995-05600	ARANDELA	WASHER	RONDELLA	RONDELLE	3
37	PAGB/T818-M5X12	97095-05012	PERNO	STUD	BULLONE	BOULON	3
38	PAF4-04000006	90430-08143	JUNTA	GASKET	GUARNIZIONE	JOINT	3

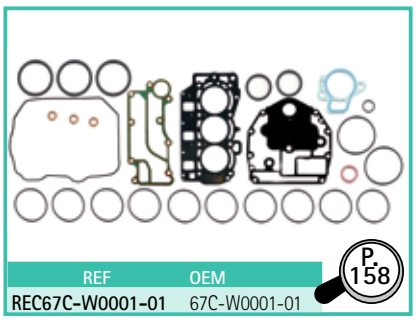

REF REC67C-W0001-01 OEM 67C-W0001-01 P. 158



P. 40

REC10W30U3
REC10W30U6
REC10W40U3
REC10W40U6

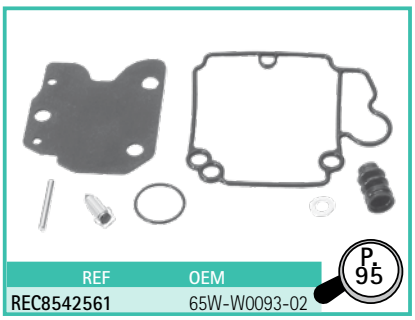

REF REC8542561 OEM 65W-W0093-02 P. 95

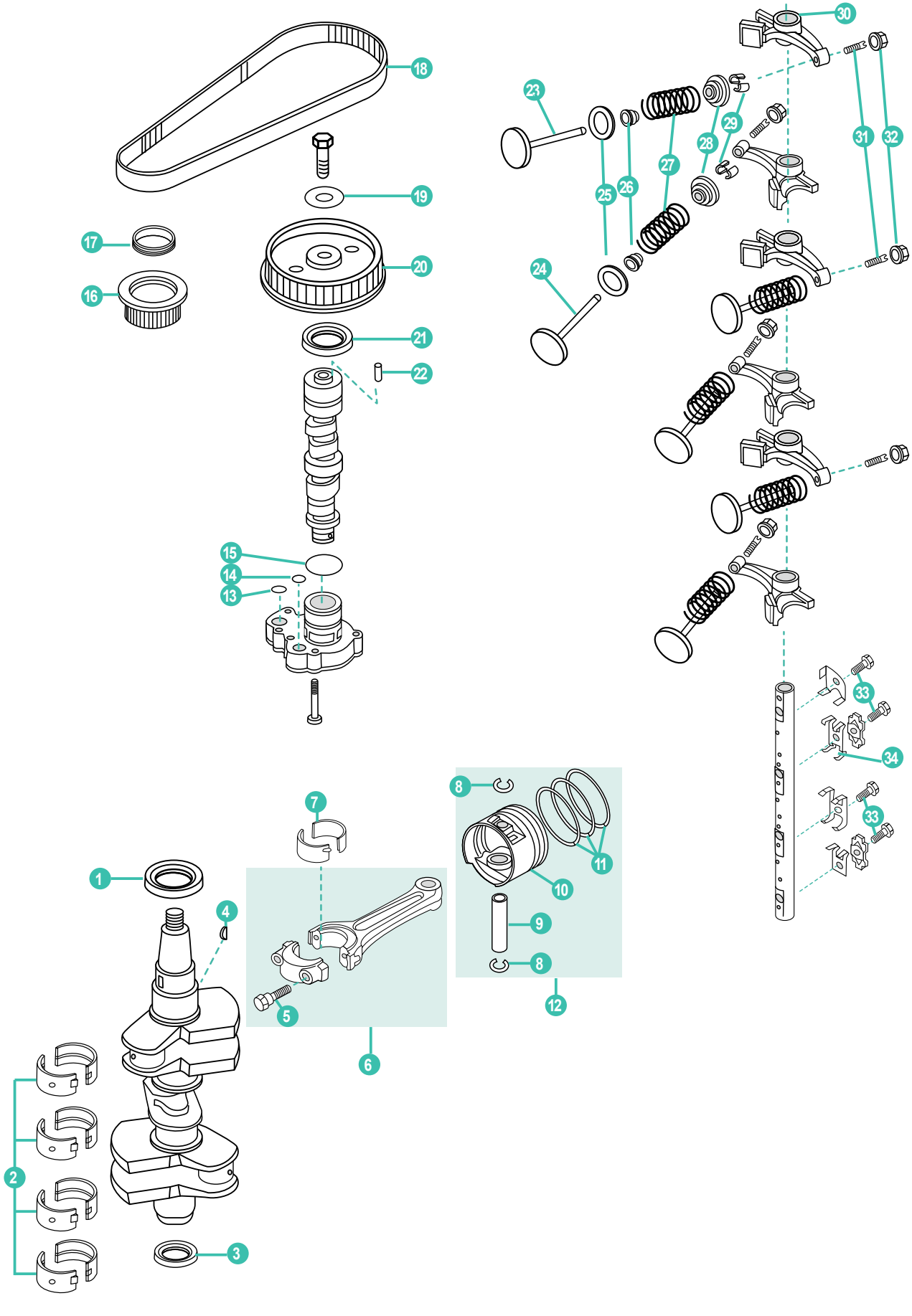
1
2
3
4
5
6
7
8
9
10
11
12
13
14
15
16
17
18
19
20
21
22
23
24
25
26
27
28
29
30
31
32
33
34

	REF	OEM					UN.
1	PAF25-05020003	93102-43M42	RETÉN DE ACEITE	OIL SEAL	PARAOLIO	JOINT SPI	1
2	PAF25-05010302-1	62Y-11416-00	COJINETE BANCADA **BROWN**	MAIN BEARING **BROWN**	CUSCINETTO **BROWN**	PALIER DE VILEBREQUIN **BROWN**	8
	PAF25-05010302-2	62Y-11416-10	COJINETE BANCADA **BLACK**	MAIN BEARING **BLACK**	CUSCINETTO **BLACK**	PALIER DE VILEBREQUIN BLACK	8
3	PAF25-05020002	93102-35M47	RETÉN DE ACEITE	OIL SEAL	PARAOLIO	JOINT SPI	1
4	PAF25-05000024	90280-04M06	CUÑA	KEY WOODRUFF	CHIAVETTA	CLAVETTE	1
5	PAF25-05020204	62Y-11654-00	TORNILLO	SCREW	VITE	VIS	2
6	PAF25-05020200	62Y-11650-10	BIELA COMPLETA	ROD, CONNECTING ASSY	BIELLA COMPLETA	BIELLE COMPLÈTE	3
7	PAF25-05020203-1	62Y-11656-00	COJINETE DE BIELA **BROWN**	BEARING, CONNECTING ROD **BROWN**	CUSCINETTO BIELLA **BROWN**	PALIER DE BIELLE **MARRON**	6
	PAF25-05020203-2	62Y-11656-10	COJINETE DE BIELA **BLACK**	BEARING, CONNECTING ROD **BLACK**	CUSCINETTO BIELLA **BLACK**	PALIER DE BIELLE **NOIR**	6
8	PAF25-05020106	93450-17129	CIRCLIP	CIRCLIP	CIRCLIP	CIRCLIP	6
9	PAF25-05020105	62Y-11633-00	PIN, PISTÓN	PIN, PISTON	SPINOTTO PISTONE	AXE DE PISTON	3
10	PAF25-05020101	65W-11631-00-96	PISTÓN	PISTON	PISTONE	PISTON	3
11	REC67C-11603-00	67C-11603-00	KIT SEGMENTOS DE PISTÓN	PISTON RING KIT	KIT FASCIA PISTONE	KIT SEGMENTS	3
12	PAF25-05020100		KIT PISTÓN	PISTON KIT	KIT PISTONE	KIT PISTON	3
13	PAF25-05050014	93210-14515	TÓRICA	O-RING	O-RING	JOINT TORIQUE	1
14	PAF25-05050013	93210-12MG9	TÓRICA	O-RING	O-RING	JOINT TORIQUE	1
15	PAF25-05050015	93210-33MH2	TÓRICA	O-RING	O-RING	JOINT TORIQUE	1
16	PAF25-05000021	65W-11536-10	ENGRANAJE DE DISTRIBUCIÓN	BELT PULLEY, TIMING	PULEGGIA DE DISTRIBUZIONE	POULIE DE DISTRIBUTION	1
17	PAF25-05000022	65W-11476-00	RESORTE	SPRING	MOLLA	RESSORT	1
18	REC65W-46241-00	65W-46241-00	CORREA DISTRIBUCIÓN	BELT, TIMING	CINGHIA DISTRIBUZIONE	COURROIE DISTRIBUTION	1
19	PAF25-05050018	90201-10M06	ARANDELA	WASHER	RONDELLA	RONDELLE	1
20	PAF40-05040006	67C-11537-01	POLEA DE CORREA	BELT PULLEY, DRIVEN	PULEGGIA CINGHIA	POULIE DE COURROIE	1
21	PAF25-05050021	93102-37M40	RETÉN DE ACEITE	OIL SEAL	PARAOLIO	JOINT SPI	1
22	PAF25-05050016	93605-14143	PIN CENTRADOR	HOLLOW PIN	SPINOTTO DI CENTRAGGIO	PIN DE CENTRAGE	1
23	PAF25-05050002	62Y-12121-00	VÁLVULA ESCAPE	VALVE, EXHAUST	VALVOLA SCARICO	SOUPAPE D'ECHAPPEMENT	3
24	PAF25-05050001	67C-12111-00	VÁLVULA ADMISIÓN	VALVE, INTAKE	VALVOLA ASPIRAZIONE	SOUPAPE D'ADMISSION	3
25	PAF25-05050003	62Y-12116-00	ARANDELA ASIENTO	SEAT, VALVE SPRING	RONDELLA BASAMENTO	SIEGE RESSORT DE SOUPAPE	6
26	PAPS2700.04.03	51Y-12119-00	RETÉN DE ACEITE	OIL SEAL	PARAOLIO	JOINT SPI	6
27	PAF25-05050005	51Y-12114-00	MUELLE DE VÁLVULA	SPRING, VALVE STEM	MOLLA DI VALVOLA	RESSORT DE SOUPAPE	6
28	PAF15-07040006	30X-12117-00	RETÉN RESORTE	SPRING, VALVE RETAINER	VALVOLA DI RITEGNO	JOINT DE RESSORT	6
29	PAF15-07040007	30X-12118-00	SEGURO DE VÁLVULA	CLAMP, VALVE	BLOCCAGGIO DI VALVOLA	CLAVETTE DE SOUPAPE	12
30	PAF25-05050301	65W-12151-00	BRAZO DE BALANCÍN	ARM, VALVE ROCKER	BILANCERE	CULBUTEUR	6
31	PAF15-07040303	62Y-12159-00	TORNILLO REGULADOR	SCREW, VALVE ADJUSTING	VITE REGOLATORE	VIS POINTEAU	6
32	PAF15-07040304	62Y-12158-00	TUERCA	LOCK NUT	DADO	ÉCROU	6
33	PAF25-05050019	90109-08M63	TORNILLO	SCREW	VITE	VIS	4
34	PAF25-05050011	62Y-12216-00	RESORTE	SPRING	MOLLA	RESSORT	1

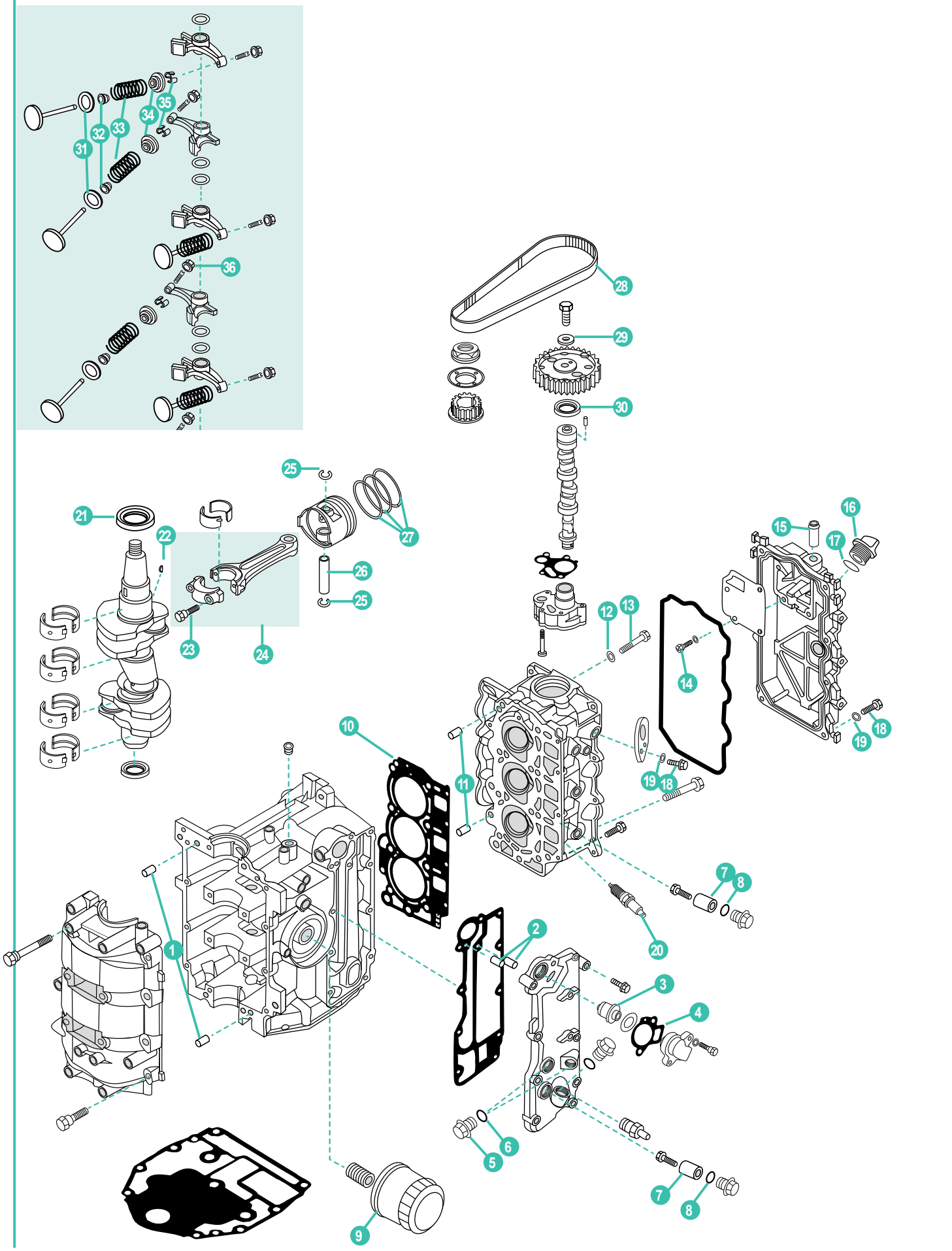
1
2
3
4
5
6
7
8
9
10
11
12
13
14
15
16
17
18
19
20
21
22
23
24
25
26
27
28
29
30
31
32
33
34
35
36

	REF	OEM					UN.
1	REC93606-12019	93606-12019	PIN CENTRADOR	HOLLOW PIN	SPINOTTO DI CENTRAGGIO	PIN DE CENTRAGE	4
2	PAF15-00000013	93604-10M03	PIN CENTRADOR	HOLLOW PIN	SPINOTTO DI CENTRAGGIO	PIN DE CENTRAGE	2
3	PAF15-07000031	6G8-12411-03	TERMOSTATO	THERMOSTAT	TERMOSTATO	THERMOSTAT	1
4	PAF15-07010022	62Y-12414-00	JUNTA TAPA TERMOSTATO	GASKET, THERMOSTAT COVER	GUARNIZIONE COPERCHIO TERMOSTATO	JOINT COUVERCLE DE THERMOSTAT	1
5	PAF15-04000002	90340-14M06	TORNILLO DRENAJE	BOLT, DISCHARGING OIL	VITE DRENAGGIO	VIS DE VIDANGE	2
6	PAF15-04000003	90430-14115	TÓRICA	O-RING	O-RING	JOINT TORIQUE	2
7	CM6G8-11325-00A	6G8-11325-00	ÁNODO	ANODE	ANODO	ANODE	2
8	PAGB/T3452.1-13X2	93210-13M63	TÓRICA	O-RING	O-RING	JOINT TORIQUE	5
9	REC5GH-13440-60	5GH-13440-50	FILTRO ACEITE	OIL FILTER	FILTRO DELL'OLIO	FILTRE À HUILE	1
10	REC6BG-11181-00	6BG-11181-00	JUNTA CULATA	GASKET, CYLINDER HEAD	GUARNIZIONE TESTATA	JOINT DE CULASSE	1
11	PAF25-00000014	99530-08012	PIN CENTRADOR	HOLLOW PIN	SPINOTTO DI CENTRAGGIO	PIN DE CENTRAGE	2
12	PAF25-05050007	90430-06014	JUNTA	GASKET	GUANIZIONE	JOINT	1
13	PAF25-05050006	90109-06M65	PERNO	STUD	BULLONE	BOULON	1
14	PAGB/T818-M4X10	98507-04010	TORNILLO	SCREW	VITE	VIS	4
15	PAF40-05070002	62Y-14485-00	PIPA DE AGUA	PIPE, WATER	TUBO	RACCORD TUYAU D'EAU	1
16	PAF15-07050004	6G8-15363-00	TAPÓN ACEITE	PLUG, OIL	TAPPO OLIO	BOUCHON DE REMPLISSAGE D'HUILE	1
17	PAF4-04000008	93210-24M79	TÓRICA	O-RING	O-RING	JOINT TORIQUE	1
18	PAGB/T5783-M6X20	97095-06020	PERNO	STUD	BULLONE	BOULON	9
19	PAGB/T97.1-6	92995-06600	ARANDELA	WASHER	RONDELLA	RONDELLE	9
20	NGKDPR6EB-9	94702-00418	BUJÍA	SPARK PLUG	CANDELA	BOUGIE	3
21	PAF25-05020003	93102-43M42	RETÉN DE ACEITE	OIL SEAL	PARAOLIO	JOINT D'HUILE	1
22	PAGB/T1099-3X5X13	90280-03017	CUÑA	KEY WOODRUFF	CHIAVETTA	CLAVETTE	1
23	PAF25-05020204	6C5-11654-00	TORNILLO	SCREW	VITE	VIS	2
24	PAF25-05020200	6C5-11650-10	BIELA COMPLETA	ROD, CONNECTING ASSY	BIELLA COMPLETA	BIELLE COMPLÈTE	3
25	PAF25-05020106	93450-17129	CIRCLIP	CIRCLIP	CIRCLIP	CIRCLIP	6
26	PAF25-05020105	62Y-11633-00	PIN, PISTÓN	PIN, PISTON	SPINOTTO PISTONE	AXE DE PISTON	3
27	REC67C-11603-00	67C-11603-00	KIT SEGMENTOS DE PISTÓN	PISTON RING KIT	KIT FASCIA PISTONE	KIT DE SEGMENTS	3
28	REC6C5-46241-00	6C5-46241-00	CORREA	BELT	CINGHIA	COURROIE DISTRIBUTION	1
29	PAF25-05050018	90201-10144	ARANDELA	WASHER	RONDELLA	RONDELLE	1
30	PAF25-05050021	93102-37M40	RETÉN DE ACEITE	OIL SEAL	PARAOLIO	JOINT D'HUILE	1
31	PAF25-05050003	62Y-12116-00	ARANDELA ASIENTO	SEAT, VALVE SPRING	RONDELLA BASAMENTO	SIEGE RESSORT DE SOUPAPE	6
32	PA166F-010003	51Y-12119-00	RETÉN DE ACEITE	OIL SEAL	PARAOLIO	JOINT D'HUILE	6
33	PAF25-05050005	51Y-12114-00	MUELLE DE VÁLVULA	SPRING, VALVE STEM	MOLLA DI VALVOLA	RESSORT DE SOUPAPE	6
34	PAF15-07040006	30X-12117-00	RETÉN RESORTE	SPRING, VALVE RETAINER	VALVOLA DI RITEGNO	JOINT DE RESSORT	6
35	PAF15-07040007	30X-12118-00	SEGURO DE VÁLVULA	CLAMP, VALVE	BLOCCAGGIO DI VALVOLA	CLAVETTE DE SOUPAPE	12
36	PAF15-07040304	62Y-12158-00	TUERCA	LOCK NUT	DADO	ÉCROU	1



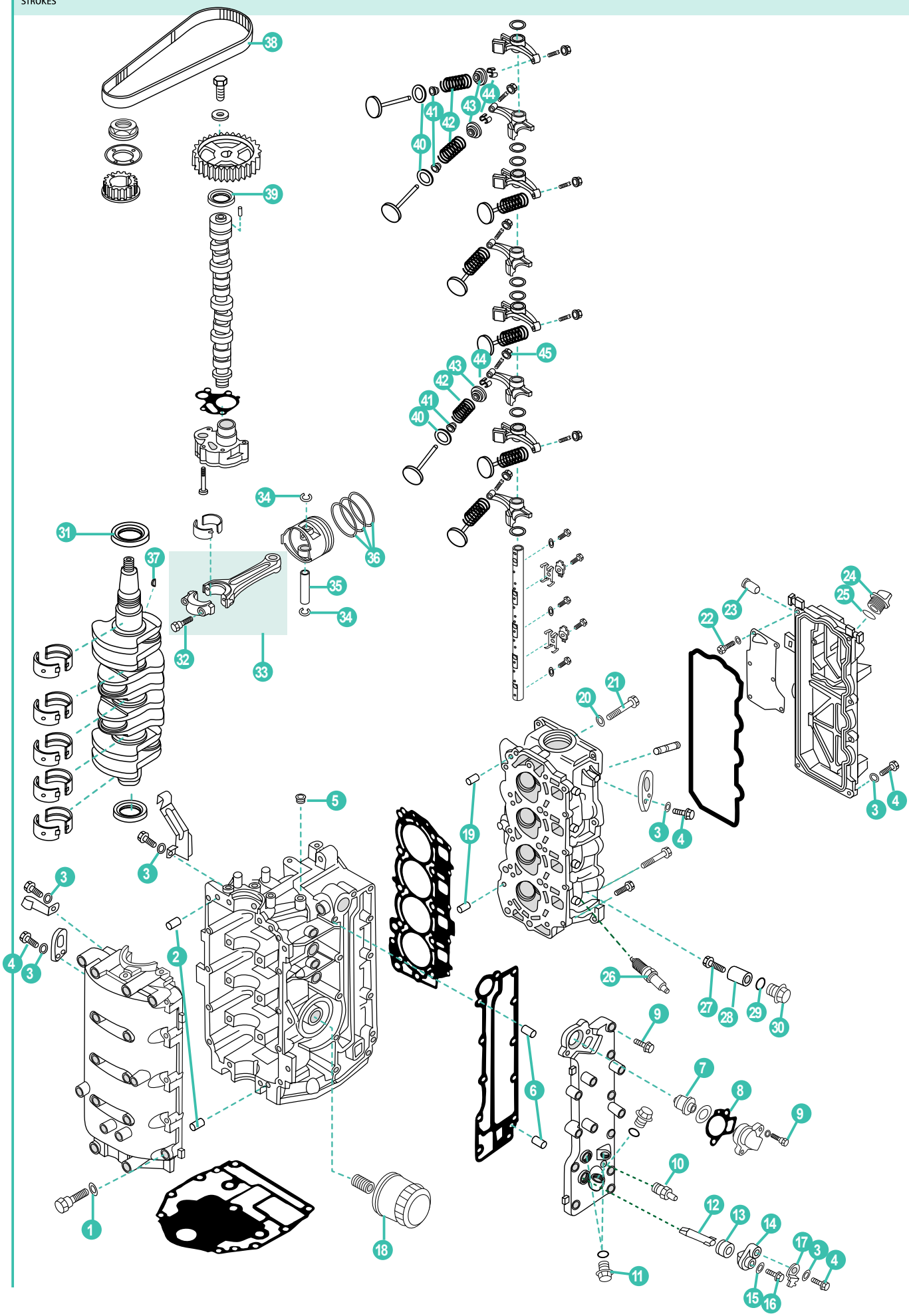
38
39
40
41
42
43
44
45
31
37
34
36
35
32
33
24
25
22
23
20
21
19
3
4
5
2
26
27
28
29
30
9
7
8
6
10
12
13
14
17
15
16
11
1
18

	REF	OEM					UN.
1	PAGB/T848-6	92903-06600	ARANDELA	WASHER	RONDELLA	RONDELLE	10
2	REC93606-12019	93606-12019	PIN CENTRADOR	HOLLOW PIN	SPINOTTO DI CENTRAGGIO	PIN DE CENTRAGE	4
3	PAGB/T97.1-6	92995-06600	ARANDELA	WASHER	RONDELLA	RONDELLE	14
4	PAGB/T5783-M6X20	97095-06020	PERNO	STUD	BULLONE	BOULON	12
5	PAF15-07010004	90344-51003	TAPÓN	CAP	TAPPO	BOUCHON	1
6	PAF25-04000007	93604-10M03	PIN CENTRADOR	HOLLOW PIN	SPINOTTO DI CENTRAGGIO	PIN DE CENTRAGE	2
7	PAF15-07000031	6G8-12411-03	TERMOSTATO	THERMOSTAT	TERMOSTATO	THERMOSTAT	1
8	REC6H3-12414-A1	62Y-12414-00	JUNTA TAPA TERMOSTATO	GASKET, THERMOSTAT COVER	GUARNIZIONE COPERCHIO TERMOSTATO	JOINT COUVERCLE DE THERMOSTAT	1
9	PAGB/T5782-M6X35	90119-06MA5	TORNILLO	SCREW	VITE	VIS	12
10	PAF25-05010113	62Y-12481-10	NIPLE DE MANGUERA	NIPPLE	TUBO	RACCORD D'EAU	1
11	PAF15-04000002	90340-14M06	TORNILLO DRENAJE	BOLT, DISCHARGING OIL	VITE DRENAGGIO	VIS DE VIDANGE	2
12	CM62Y-11325-00A	62Y-11325-00	ÁNODO	ANODE	ANODO	ANODE	1
13	PAF15-07010009	66M-11328-00	TAPÓN	CAP	TAPPO	BOUCHON	1
14	PAF15-07010011	66M-11327-00-94	TAPA ÁNODO	COVER, ANODE	COPERTURA ANODO	COUVERCLE DU ANODE	1
15	PAGB/T97.1-8	92995-05600	ARANDELA	WASHER	RONDELLA	RONDELLE	1
16	PAGB/T818-M5X12	97095-05012	PERNO	STUD	BULLONE	BOULON	1
17	PAF15-07010012	66M-12535-00	EMPAQUETADURA DE ÁNODO	PLATE, ANODE	PIASTRA ANODO	PLAQUE D'ANODE	14
18	REC5GH-13440-60	5GH-13440-20	FILTRO ACEITE	OIL FILTER	FILTRO DELL'OLIO	FILTRE À HUILE	1
19	PAF25-00000014	99530-08012	PIN CENTRADOR	HOLLOW PIN	SPINOTTO DI CENTRAGGIO	PIN DE CENTRAGE	2
20	PAF25-05050007	90430-06014	JUNTA	GASKET	GUARNICIONE	JOINT	1
21	PAF25-05050006	90109-06M65	PERNO	STUD	BULLONE	BOULON	1
22	PAGB/T818-M4X10	98507-04010	TORNILLO	SCREW	VITE	VIS	6
23	PAF40-05070002	62Y-14485-00	PIPA DE AGUA	PIPE, WATER	TUBO	RACCORD TUYAU D'EAU	1
24	PAF15-07050004	6G8-15363-00	RETÉN DE ACEITE	OIL SEAL	PARAOLIO	JOINT D'HUILE	1
25	PAF4-04000008	93210-24M79	TÓRICA	O-RING	O-RING	JOINT TORIQUE	1
26	NGKDPR6EB-9	94702-00418	BUJÍA	PLUG SPARK	CANDELA	BOUGIE	4
27	PAGB/T818-M5X25	97880-05025	TORNILLO	SCREW	VITE	VIS	4
28	CM6G8-11325-00A	6G8-11325-00	ÁNODO	ANODE	ANODO	ANODE	4
29	PAGB/T3452.1-13X2	93210-13M63	TÓRICA	O-RING	O-RING	JOINT TORIQUE	4
30	PAF20-05030009	6G8-11197-01	TAPÓN	CAP	TAPPO	BOUCHON	4
31	PAF25-05020003	93102-43M42	RETÉN DE ACEITE	OIL SEAL	PARAOLIO	JOINT SPI	1
32	PAF25-05020204	6C5-11654-00	TORNILLO	SCREW	VITE	VIS	2
33	PAF25-05020200	6C5-11650-00	BIELA COMPLETA	ROD, CONNECTING ASSY	BIELLA COMPLETA	BIELLE COMPLÈTE	4
34	PAF25-05020106	93450-17129	CIRCLIP	CIRCLIP	CIRCLIP	CIRCLIP	8
35	PAF25-05020105	62Y-11633-00	PIN, PISTÓN	PIN, PISTON	SPINOTTO PISTONE	AXE DE PISTON	4
36	REC67C-11603-00	67C-11603-00	KIT SEGMENTOS DE PISTÓN	PISTON RING KIT	KIT FASCIA PISTONE	KIT DE SEGMENTS	4
37	PAGB/T1099-3X5X13	90280-03M01	CHAVETA	KEY WOODRUFF	CHIAVETTA	CLAVETTE	1
38	REC6C5-46241-00	6C5-46241-00	CORREA DISTRIBUCIÓN	BELT, TIMING	CINGHIA DISTRIBUZIONE	COURROIE DISTRIBUTION	1
39	PAF25-05050021	93102-37M40	RETÉN DE ACEITE	OIL SEAL	PARAOLIO	JOINT SPI	1
40	PAF25-05050003	62Y-12116-00	ARANDELA ASIENTO	SEAT, VALVE SPRING	RONDELLA BASAMENTO	SIEGE RESSORT DE SOUPAPE	8
41	PAPS2700.04.03	51Y-12119-00	RETÉN DE ACEITE	OIL SEAL	PARAOLIO	JOINT SPI	8
42	PAF25-05050005	51Y-12114-00	MUELLE DE VÁLVULA	SPRING, VALVE STEM	MOLLA DI VALVOLA	RESSORT DE SOUPAPE	8
43	PAF15-07040006	30X-12117-00	RETÉN RESORTE	SPRING, VALVE RETAINER	VALVOLA DI RITEGNO	JOINT DE RESSORT	8
44	PAF15-07040007	30X-12118-00	SEGURO DE VÁLVULA	CLAMP, VALVE	BLOCCAGGIO DI VALVOLA	CLAVETTE DE SOUPAPE	16
45	PAF15-07040304	62Y-12158-00	TUERCA	LOCK NUT	DADO	ÉCROU	1



REC10W30U3
REC10W30U6
REC10W40U3
REC10W40U6

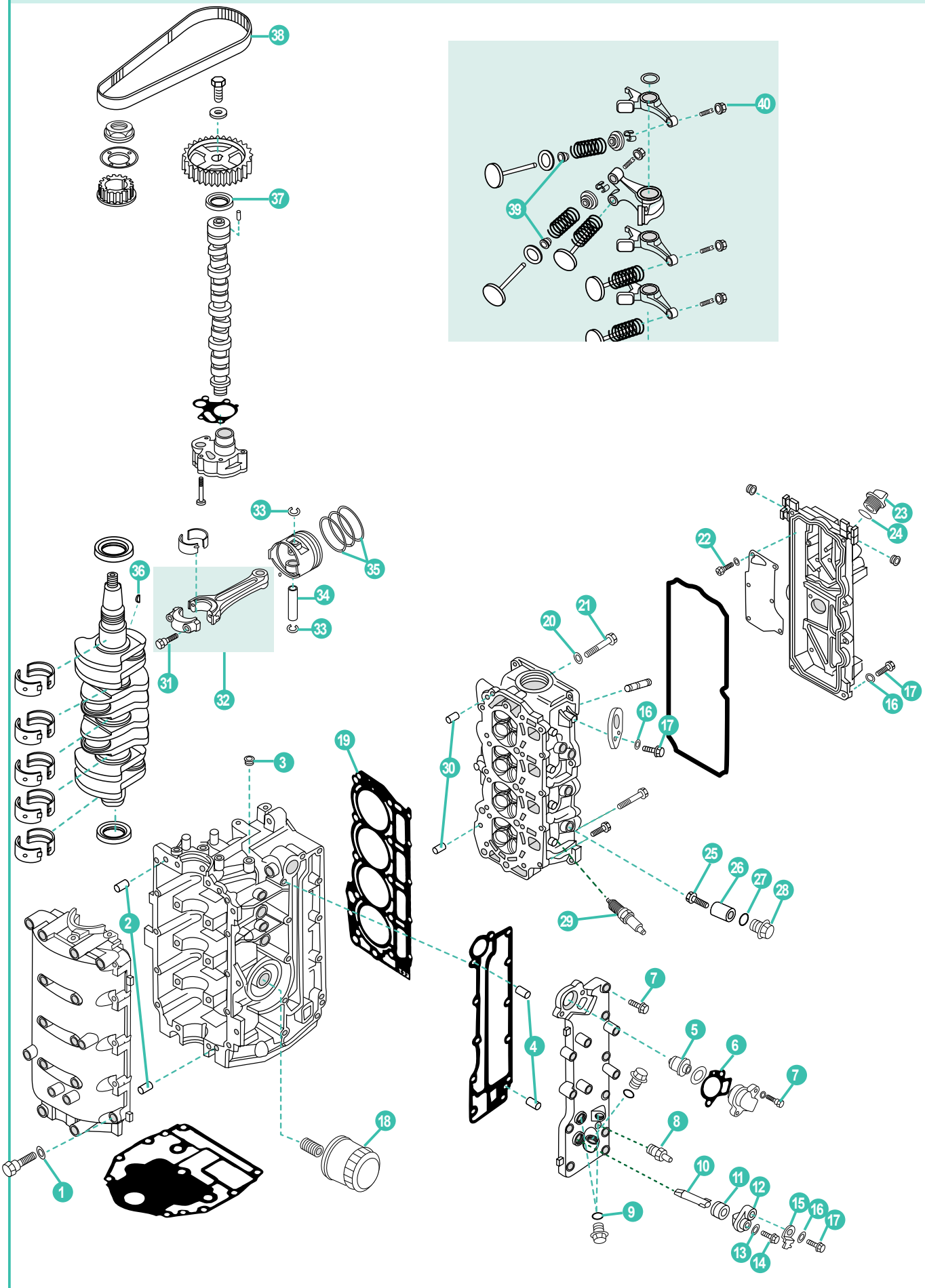
38
37
40
39
33
35
36
34
33
31
32
23
24
22
21
20
16
17
16
17
30
19
3
25
26
27
28
29
2
4
7
5
6
7
8
18
1
10
11
12
15
16
17
9
13
14

	REF	OEM					UN.
1	PAGB/T848-6	92903-06600	ARANDELA	WASHER	RONDELLA	RONDELLE	10
2	REC93606-12019	90606-12019	PIN CENTRADOR	HOLLOW PIN	SPINOTTO DI CENTRAGGIO	PIN DE CENTRAGE	4
3	PAF15-07010004	90344-51003	TAPÓN	CAP	TAPPO	BOUCHON	1
4	PAF25-04000007	93604-10M03	PIN CENTRADOR	HOLLOW PIN	SPINOTTO DI CENTRAGGIO	PIN DE CENTRAGE	2
5	PAF15-07000031	6G8-12411-03	TERMOSTATO	THERMOSTAT	TERMOSTATO	THERMOSTAT	1
6	REC6H3-12414-A1	62Y-12414-00	JUNTA TAPA TERMOSTATO	GASKET, THERMOSTAT COVER	GUARNIZIONE COPERCHIO TERMOSTATO	JOINT COUVERCLE DE THERMOSTAT	1
7	PAGB/T5782-M6X35	90119-06MA5	ARANDELA	WASHER	RONDELLA	RONDELLE	12
8	PAF25-05010113	62Y-12481-10	NIPLE DE MANGUERA	NIPPLE	TUBO	RACCORD D'EAU	1
9	PAF15-04000002	90340-14M06	TORNILLO DRENAJE	BOLT, DISCHARGING OIL	VITE DRENAGGIO	VIS DE VIDANGE	2
10	CM62Y-11325-00A	62Y-11325-00	ÁNODO	ANODE	ANODO	ANODE	1
11	PAF15-07010009	66M-11328-00	TAPÓN	CAP	TAPPO	BOUCHON	1
12	PAF15-07010011	66M-11327-00-94	TAPA ÁNODO	COVER, ANODE	COPERTURA ANODO	COUVERCLE DU ANODE	1
13	PAGB/T97.1-8	92995-05600	ARANDELA	WASHER	RONDELLA	RONDELLE	1
14	PAGB/T818-M5X12	97095-05012	PERNO	STUD	BULLONE	BOULON	1
15	PAF15-07010012	66M-12535-00	EMPAQUETADURA DE ÁNODO	PLATE, ANODE	PIASTRA ANODO	PLAQUE D'ANODE	1
16	PAGB/T97.1-6	92995-06600	ARANDELA	WASHER	RONDELLA	RONDELLE	1
17	PAGB/T5783-M6X20	97095-06020	PERNO	STUD	BULLONE	BOULON	3
18	REC5GH-13440-60	5GH-13440-50	FILTRO ACEITE	OIL FILTER	FILTRO DELL'OLIO	FILTRE À HUILE	1
19	REC6CJ-11181-00	6CJ-11181-00	JUNTA CULATA	GASKET, CYLINDER HEAD	GUARNIZIONE TESTATA	JOINT DE CULASSE	1
20	PAF25-05050007	90430-06014	JUNTA	GASKET	GUANIZIONE	JOINT	1
21	PAF25-05050006	90109-06M65	PERNO	STUD	BULLONE	BOULON	1
22	PAGB/T818-M4X10	98507-04010	TORNILLO	SCREW	VITE	VIS	6
23	PAF15-07050004	6G8-15363-00	TAPÓN ACEITE	PLUG, OIL	TAPPO OLIO	BOUCHON REMPLISSAGE D'HUILE	1
24	PAF4-04000008	93210-24M79	TÓRICA	O-RING	O-RING	JOINT TORIQUE	1
25	PAGB/T818-M5X25	97880-05025	TORNILLO	SCREW	VITE	VIS	3
26	CM6G8-11325-00A	6G8-11325-00	ÁNODO	ANODE	ANODO	ANODE	3
27	PAGB/T3452.1-13X2	93210-13M63	TÓRICA	O-RING	O-RING	JOINT TORIQUE	3
28	PAF20-05030009	6G8-11197-01	TAPÓN	CAP	TAPPO	BOUCHON	3
29	NGKLKR7E	94702-00429	BUJÍA	SPARK PLUG	CANDELA	BOUGIE	4
30	PAF25-00000014	99530-08012	PIN CENTRADOR	HOLLOW PIN	SPINOTTO DI CENTRAGGIO	PIN DE CENTRAGE	2
31	PAF25-05020204	6C5-11654-00	TORNILLO	SCREW	VITE	VIS	2
32	PAF25-05020200	6C5-11650-10	BIELA COMPLETA	ROD, CONNECTING ASSY	BIELLA COMPLETA	BIELLE COMPLÈTE	4
33	PAF25-05020106	93450-17129	CIRCLIP	CIRCLIP	CIRCLIP	CIRCLIP	8
34	PAF25-05020105	62Y-11633-00	PIN, PISTÓN	PIN, PISTON	SPINOTTO PISTONE	AXE DE PISTON	4
35	REC67C-11603-00	67C-11603-00	KIT SEGMENTOS DE PISTÓN	PISTON RING KIT	KIT FASCIA PISTONE	KIT DE SEGMENTS	4
36	PAGB/T1099-3X5X13	90280-03M01	CHAVETA	KEY WOODRUFF	CHIAVETTA	CLAVETTE	1
37	PAF25-05050021	93102-37M40	RETÉN DE ACEITE	OIL SEAL	PARAOLIO	JOINT SPI	1
38	REC6C5-46241-00	6C5-46241-00	CORREA DISTRIBUCIÓN	BELT, TIMING	CINGHIA DISTRIBUZIONE	COURROIE DISTRIBUTION	1
39	PAPS2700.04.03	51Y-12119-00	RETÉN DE ACEITE	OIL SEAL	PARAOLIO	JOINT SPI	16
40	PAF15-07040304	62Y-12158-00	TUERCA	LOCK NUT	DADO	ÉCROU	8



REC10W30U3
REC10W30U6
REC10W40U3
REC10W40U6


10W30
10W40
P. 40
REC10W30U3
REC10W30U6
REC10W40U3
REC10W40U6

	REF	OEM					UN.
1	PAGB/T97.1-6	92903-06600	ARANDELA	WASHER	RONDELLA	RONDELLE	22
2	REC67C-11351-00	67C-11351-01	JUNTA BASE MOTOR	GASKET ENGINE	GUARNIZIONE BASE MOTORE	JOINT MOTEUR	1
3	REC93606-12019	93606-12019	PIN CENTRADOR	HOLLOW PIN	SPINOTTO DI CENTRAGGIO	PIN DE CENTRAGE	4
4	PAF15-04000002	90340-14M06	TORNILLO DRENAJE	BOLT, DISCHARGING OIL	VITE DRENAGGIO	VIS DE VIDANGE	1
5	PAF15-04000003	90430-14115	TÓRICA	O-RING	O-RING	JOINT TORIQUE	1
6	REC5GH-13440-00	5GH-13440-10	FILTRO ACEITE	OIL FILTER	FILTRO DELL'OLIO	FILTRE À HUILE	1
7	PAF15-07000031	6G8-12411-03	TÓRICA	O-RING	O-RING	JOINT TORIQUE	1
8	REC6H3-12414-A1	62Y-12414-00	JUNTA TAPA TERMOSTATO	GASKET, THERMOSTAT COVER	GUARNIZIONE COPERCHIO TERMOSTATO	JOINT COUVERCLE DE THERMOSTAT	1
9	PAF15-07010021	6H3-12413-00-1S	TAPA TERMOSTATO	COVER, THERMOSTAT	COPERCHIO TERMOSTATO	COUVERCLE DE THERMOSTAT	1
10	CM62Y-11325-00A	62Y-11325-00	ÁNODO	ANODE	ANODO	ANODE	2
11	PAF15-07010009	66M-11328-00	TAPÓN	CAP	TAPPO	BOUCHON	2
12	PAF15-07010011	66M-11327-00-94	TAPA ÁNODO	COVER, ANODE	COPERTURA ANODO	COUVERCLE DU ANODE	2
13	PAGB/T97.1-5	92995-05600	ARANDELA	WASHER	RONDELLA	RONDELLE	1
14	PAGB/T818-M5X12	97095-05012	PERNO	STUD	BULLONE	BOULON	1
15	PAF15-07010012	66M-12535-00	EMPAQUETADORA DE ÁNODO	PLATE, ANODE	PIASTRA ANODO	PLAQUE D'ANODE	1
16	PAGB/T5783-M6X20	97095-06020	PERNO	STUD	BULLONE	BOULON	12
17	PAF15-05000014	90445-09104	TUBO DE AGUA	WATER TUBE	TUBO DELL'ACQUA	DURITE D'EAU	1
18	PAHT-2.5X60	90465-11M10	BRIDA	CLAMP	FLANGIA	COLLIER	5
19	PAF15-05000011	688-24378-00	CONECTOR DE 3 VÍAS	THREE-WAY PIPE	CONNETTORE T	TE	1
20	PAF25-03000009	90445-09095	TUBO DE AGUA	WATER TUBE	TUBO DELL'ACQUA	DURITE D'EAU	1
21	PAF25-03000008	90445-09068	TUBO DE AGUA	WATER TUBE	TUBO DELL'ACQUA	DURITE D'EAU	1
22	PAHT-2.5X60	90465-11M10	BRIDA	CLAMP	FLANGIA	COLLIER	2
23	PAF25-00000014	99530-08012	PIN CENTRADOR	HOLLOW PIN	SPINOTTO DI CENTRAGGIO	PIN DE CENTRAGE	2
24	PAF25-05050007	90430-06014	JUNTA	GASKET	GUANIZIONE	JOINT	5
25	PAF25-05050006	90109-06M65	PERNO	STUD	BULLONE	BOULON	1
26	PAGB/T818-M4X10	98507-04010	TORNILLO	SCREW	VITE	VIS	4
27	PAF40-05070002	62Y-14485-00	PIPA DE AGUA	PIPE, WATER	TUBO	RACCORD TUYAU D'EAU	1
28	PAF15-07050004	6G8-15363-00	TAPÓN ACEITE	PLUG, OIL	TAPPO OLIO	BOUCHON REMPLISSAGE D'HUILE	1
29	PAJASOF40431-025	93210-24M79	TÓRICA	O-RING	O-RING	JOINT TORIQUE	1
30	PAF25-05000002	90119-09M00	TORNILLO CON ARANDELA	BOLT, FLANGE	VITE CON RONDELLA	VIS DE BRIDE	10
31	NGKDPR6EA-9	94701-00375	BUJÍA	SPARK PLUG	CANDELA	BOUGIE	4
32	PAF25-05020003	93102-43M42	RETÉN DE ACEITE	OIL SEAL	PARAOLIO	JOINT SPI	1
33	PAF4-04000019	90280-04M06	CUÑA	KEY WOODRUFF	CHIAVETTA	CLAVETTE	1
34	PAF25-05020204	6C5-11654-00	TORNILLO	SCREW	VITE	VIS	2
35	PAF25-05020200	6C5-11650-00	BIELA COMPLETA	ROD, CONNECTING ASSY	BIELLA COMPLETA	BIELLE COMPLÈTE	4
36	PAF25-05020106	93450-17129	CIRCLIP	CIRCLIP	CIRCLIP	CIRCLIP	8
37	PAF25-05020105	62Y-11633-00	PIN, PISTÓN	PIN, PISTON	SPINOTTO PISTONE	AXE DE PISTON	4
38	PAF25-05050014	93210-14515	PISTÓN, CONTRA	PISTON, BALANCE	PISTONE, CONTRO	PISTON D'EQUILIBRAGE	1
39	PAF25-05050013	93210-12MG9	TÓRICA	O-RING	O-RING	JOINT TORIQUE	1
40	PAF25-05050015	93210-33MH2	TÓRICA	O-RING	O-RING	JOINT TORIQUE	1
41	PAF25-05050016	93605-14143	PIN CENTRADOR	HOLLOW PIN	SPINOTTO DI CENTRAGGIO	PIN DE CENTRAGE	1
42	PAF25-05050021	93102-37M40	RETÉN DE ACEITE	OIL SEAL	PARAOLIO	JOINT SPI	1
43	PAF25-05050018	90201-10M06	ARANDELA	WASHER	RONDELLA	RONDELLE	1
44	REC62Y-46241-00	62Y-46241-00	CORREA DISTRIBUCIÓN	BELT, TIMING	CINGHIA DISTRIBUZIONE	COURROIE DISTRIBUTION	1
45	PAF25-05050002	62Y-12121-00	VÁLVULA ESCAPE	VALVE, EXHAUST	VALVOLA SCARICO	SOUPAPE D'ECHAPPEMENT	4
46	PAF25-05050003	62Y-12116-00	ARANDELA ASIENTO	SEAT, VALVE SPRING	RONDELLA BASAMENTO	SIEGE RESSORT DE SOUPAPE	8
47	PAPS2700.04.03	51Y-12119-00	RETÉN DE ACEITE	OIL SEAL	PARAOLIO	JOINT SPI	8
48	PAF25-05050005	51Y-12114-00	MUELLE DE VÁLVULA	SPRING, VALVE STEM	MOLLA DI VALVOLA	RESSORT DE SOUPAPE	8
49	PAF15-07040006	30X-12117-00	RETÉN RESORTE	SPRING, VALVE RETAINER	VALVOLA DI RITEGNO	JOINT DE RESSORT	8
50	PAF15-07040007	30X-12118-00	SEGURO DE VÁLVULA	CLAMP, VALVE	BLOCCAGGIO DI VALVOLA	CLAVETTE DE SOUPAPE	16
51	PAF15-07040304	62Y-12158-00	TUERCA	LOCK NUT	DADO	ÉCROU	8
52	PAF25-05050009	62Y-12238-00	PLACA TOPE DE PERNO	PLATE, BOLT STOPPER	PIASTRA DE VITE	PLAQUE DE FIXATION	2
53	PAF25-05050019	90109-08M63	TORNILLO	SCREW	VITE	VIS	5
54	PAF25-05050011	62Y-12216-00	RESORTE	SPRING	MOLLA	RESSORT	14
55	PAF25-05050012	62Y-12231-00	TOPE DE GUÍA	PLATE, BOLT STOPPER	PIASTRA DE GUIDA	PLAQUE DE FIXATION	2
56	PAF40-05040003	62Y-12279-00	PLACA EJE DE BALANCINES	FIXED PLATE B, ROCKER SHAFT	PIASTRA, ASSE BILANCERE	PLAQUE ARBRE DE CULBUTEUR	1

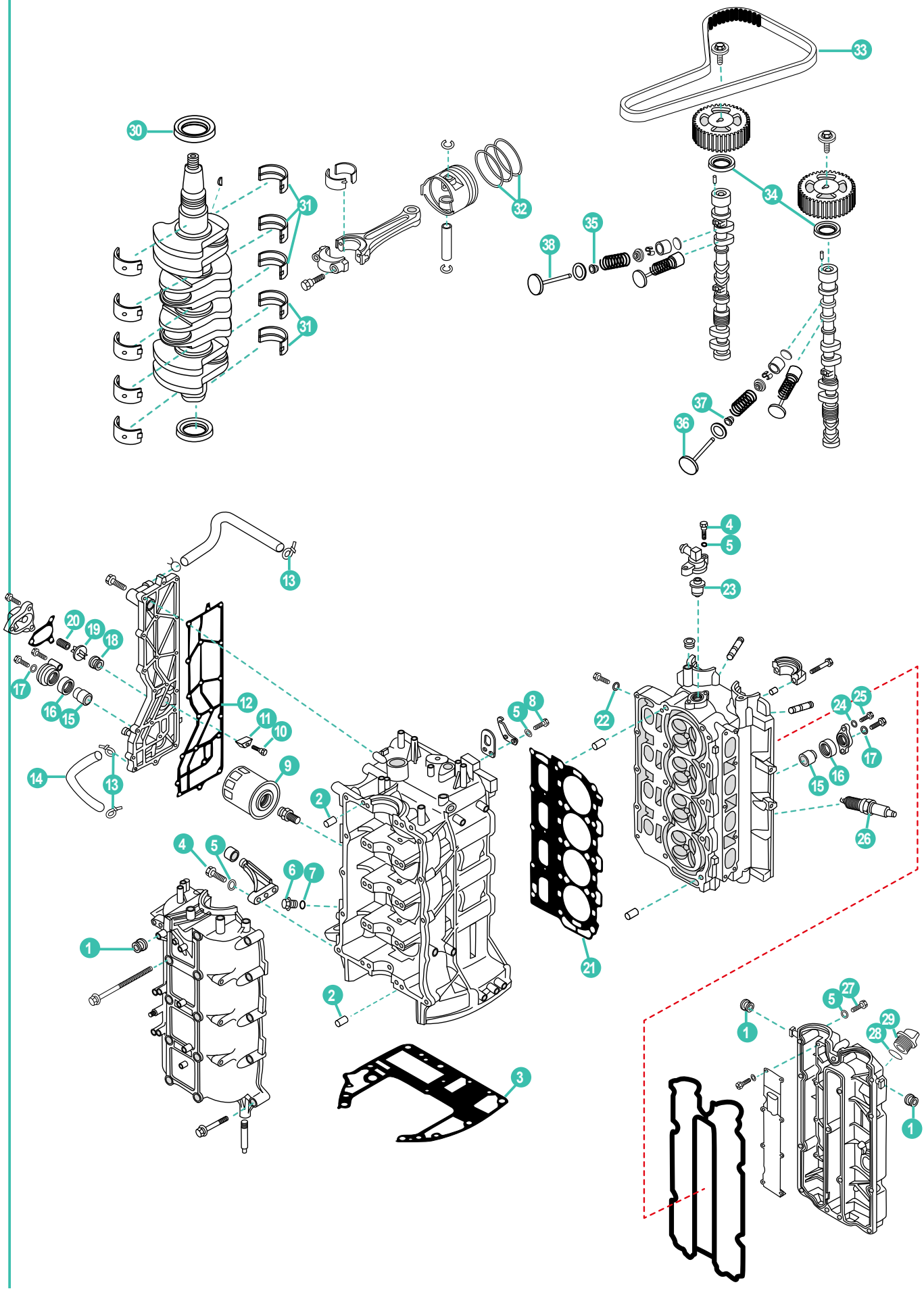
1
2
3
4
5
6
7
8
9
10
11
12
13
14
15
16
17
18
19
20
21
22
23
24
25
26
27
28
29
30
31
32
33
34
35
36
37
38

	REF	OEM					UN.
1	PAF15-07010027	90480-12072	TAPÓN	CAP	TAPPO	BOUCHON	3
2	REC93606-12019	93606-12019	PIN CENTRADOR	HOLLOW PIN	SPINOTTO DI CENTRAGGIO	PIN DE CENTRAGE	24
3	REC68V-11351-00	68V-11351-00	JUNTA BASE MOTOR	GASKET ENGINE	GUARNIZIONE BASE MOTORE	JOINT MOTEUR	1
4	PAGB/T5782-M6X25	97095-06025	PERNO	STUD	BULLONE	BOULON	6
5	PAGB/T97.1-6	92995-06600	ARANDELA	WASHER	RONDELLA	RONDELLE	24
6	PAF15-04000002	90340-14M06	TORNILLO DRENAJE	BOLT, DISCHARGING OIL	VITE DRENAGGIO	VIS DE VIDANGE	1
7	PAF15-04000003	90430-14115	TÓRICA	O-RING	O-RING	JOINT TORIQUE	1
8	PAGB/T5783-M6X20	97095-06020	PERNO	STUD	BULLONE	BOULON	4
9	REC5GH-13440-00	5GH-13440-00	FILTRO ACEITE	OIL FILTER	FILTRO DELL'OLIO	FILTRE À HUILE	1
10	PAGB/T820-M4X12	98780-04016	TORNILLO	SCREW	VITE	VIS	3
11	CM15026A	6E5-11325-00	ÁNODO	ANODE	ANODO	ANODE	3
12	REC67F-41114-A2	6D8-41114-A0	JUNTA	GASKET	GUARNIZIONE	JOINT	1
13	PAHT-2.5X60	90465-11M10	BRIDA	CLAMP	FLANGIA	COLLIER	3
14	PAF40-05000053	90445-10M40	TUBO	TUBE	TUBO	DURITE	1
15	CM68V-11325-01A	68V-11325-02	ÁNODO	ANODE	ANODO	ANODE	2
16	REC67F-11328-00	67F-11328-00	TAPÓN	CAP	TAPPO	BOUCHON	2
17	REC90430-06M03	90430-06M03	JUNTA	GASKET	GUARNIZIONE	JOINT	2
18	REC90480-20M05	90480-20M05	TAPÓN	CAP	TAPPO	BOUCHON	1
19	REC60H-12416-00	6G5-12416-00	VÁLVULA CONTROL DE PRESIÓN	VALVE, PRESSURE CONTROL	VALVOLA ANTIPRESSIONE	SOUPAPE DE DEPRESSION	1
20	REC90501-16M11	90501-16M11	RESORTE	SPRING	MOLLA	RESSORT	1
21	REC67F-11181-03	67F-11181-02	JUNTA CULATA	GASKET, CYLINDER HEAD	GUARNIZIONE TESTATA	JOINT DE CULASSE	1
22	PAF4-04000006	90430-08143	JUNTA	GASKET	GUARNIZIONE	JOINT	4
23	REC67F-12411-01	67F-12411-01	TERMOSTATO	THERMOSTAT	TERMOSTATO	THERMOSTAT	1
24	PAGB/T97.1-8	92995-08600	ARANDELA	WASHER	RONDELLA	RONDELLE	4
25	PAGB/T5783-M8X25	97075-08025	PERNO	STUD	BULLONE	BOULON	4
26	NGKLFR5A-11	94702-00391	BUJÍA	SPARK PLUG	CANDELA	BOUGIE	4
27	REC90101-06M56	97095-06030	PERNO	STUD	BULLONE	BOULON	14
28	PAJASOF40431-025	93210-24M79	TÓRICA	O-RING	O-RING	JOINT TORIQUE	1
29	PAF15-07050004	6G8-15363-00	TAPÓN ACEITE	PLUG, OIL	TAPPO OLIO	BOUCHON REMPLISSAGE D'HUILE	1
30	REC93102-48009	93102-48009	RETÉN DE ACEITE	OIL SEAL	PARAOLIO	JOINT SPI	
31	REC67F-11416-00	67F11416-00	COJINETE PLANO 1 VERDE	MAIN BEARING 1 GREEN	CUSCINETTO 1 VERDE	PALIER 1 VERT	
	REC67F-11416-10	67F11416-10	COJINETE PLANO 1 AZUL	MAIN BEARING 1 BLUE	CUSCINETTO 1 BLUE	PALIER 1 BLEU	
	REC67F-11416-20	67F11416-20	COJINETE PLANO 1 ROJO	MAIN BERING 1 RED	CUSCINETTO 1 ROSSO	PALIER 1 ROUGE	
32	REC6D8-11603-10	6D8-11603-01	KIT SEGMENTOS DE PISTÓN 200-300	PISTON RING KIT 200-300	KIT FASCIA PISTONE 200-300	KIT DE SEGMENTS 200-300	
	REC6D8-11604-10	6D8-11604-01	KIT SEGMENTOS DE PISTÓN 0.25mm O/SO	PISTON RING KIT 0.25mm O/S	KIT FASCIA PISTONE 0.25mm O/S	KIT DE SEGMENTS 0.25 mm O/S	
33	REC67F-46241-00	67F-46241-00	CORREA	BELT	CINGHIA	COURROIE DISTRIBUTION	
34	REC93102-38008	93102-38M59	RETÉN DE ACEITE	OIL SEAL	PARAOLIO	JOINT SPI	
35	RECK0A-A3722-00	K0A-A3722-00	RETÉN DE ACEITE	OIL SEAL	PARAOLIO	JOINT SPI	
36	REC68V-12111-00	68V-12111-00	VÁLVULA ADMISIÓN	VALVE, INTAKE	VALVOLA ASPIRAZIONE	SOUPAPE D ADMISSION	
37	RECK0A-A3721-00	K0A-A3721-00	RETÉN DE ACEITE	OIL SEAL	PARAOLIO	JOINT SPI	

4T STROKES F80B/C, F100/B/D, F115A

	REF	OEM					UN.
36	REC6D8-12111-00	6D8-12111-00	VÁLVULA DE ADMISIÓN Ø96,75mm	VALVE, INTAKE Ø96,75mm	VALVOLA ASPIRAZIONE Ø96,75mm	SOUPAPE D ADMISSION Ø96,75mm	8
38	REC6D8-12121-10	6D8-12121-10	VÁLVULA DE ESCAPE Ø98,95 mm	VALVE, EXHAUST Ø98,95 mm	VALVOLA SCARICO Ø98,95 mm	SOUPAPE D'ECHAPPEMENT Ø98,95 mm	8

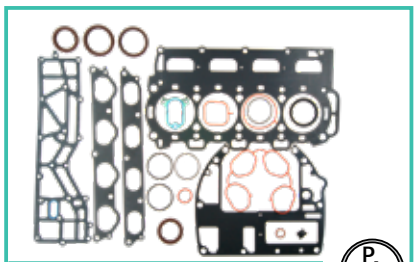

REF	OEM
REC67F-W0001-00	67F-W0001-01

P. 217

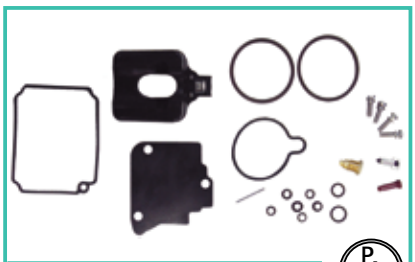

REF	OEM
REC67F-W0093-00	67F-W0093-00

P. 97



P. 40

REC10W30U3
REC10W30U6
REC10W40U3
REC10W40U6

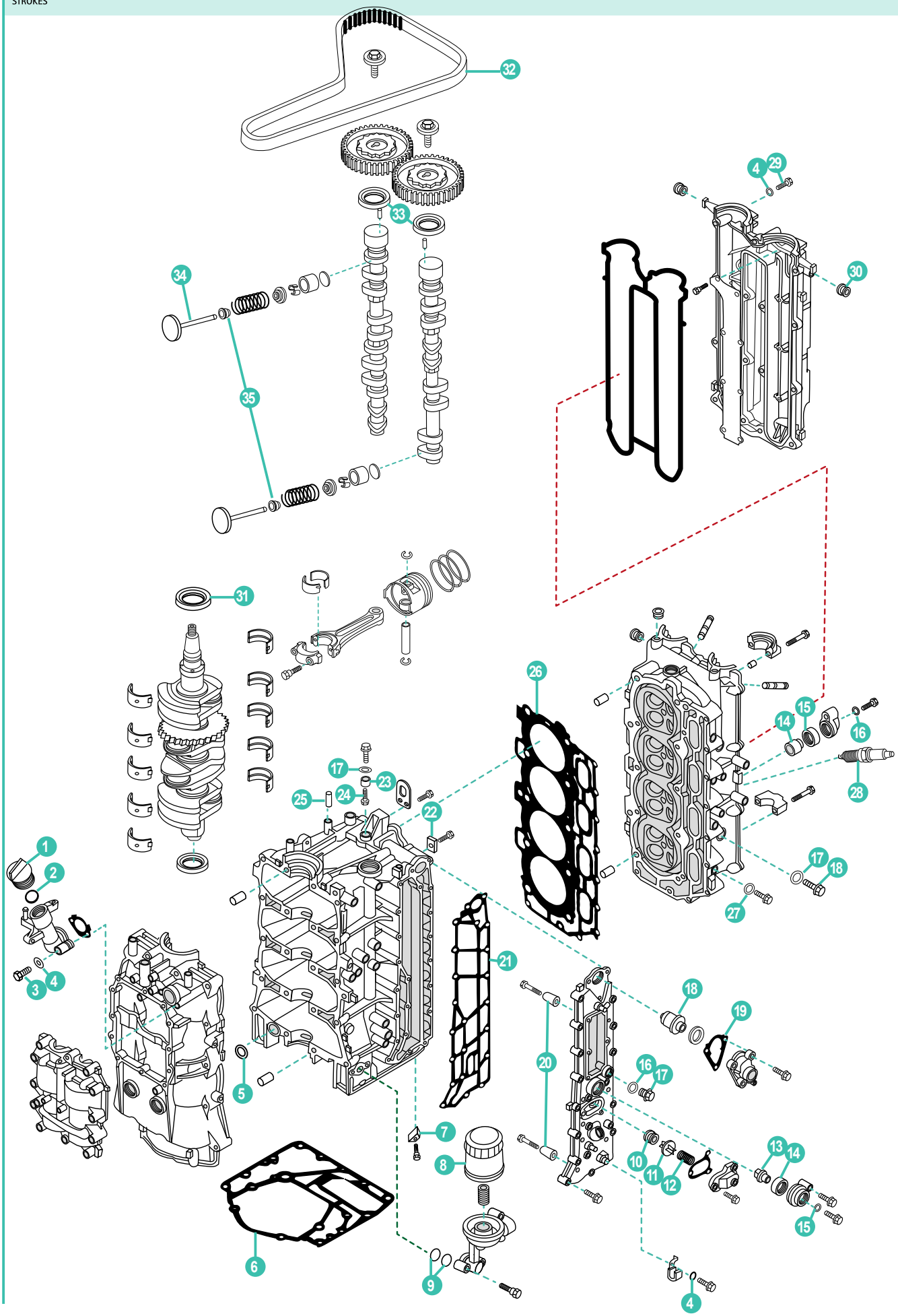
32
33
34
35
4
29
30
31
26
15
14
16
28
17
23
25
24
22
17
18
27
1
2
3
4
21
5
18
19
20
16
17
7
8
10
11
12
13
14
15
6
9
4

	REF	OEM					UN.
1	PAF15-07050004	6G8-15363-00	TAPÓN ACEITE	PLUG, OIL	TAPPO OLIO	BOUCHON REMPLISSAGE D'HUILE	1
2	PAJASOF40431-025	93210-24M79	TÓRICA	O-RING	O-RING	JOINT TORIQUE	1
3	REC97095-06045	97095-06045	PERNO	STUD	BULLONE	BOULON	2
4	PAGB/T97.1-6	92995-06600	ARNADELA	WASHER	RONDELLA	RONDELLE	15
5	REC93210-25552	93210-25552	TÓRICA	O-RING	O-RING	JOINT TORIQUE	1
6	REC63P-11351-01	63P-11351-00	JUNTA BASE MOTOR	GASKET ENGINE	GUARNIZIONE BASE MOTORE	JOINT MOTEUR	1
7	CM63P-11325-01A	63P-11325-01	ÁNODO	ANODE	ANODO	ANODE	1
8	REC35-822626Q15	69J-13440-01	FILTRO ACEITE	OIL FILTER	FILTRO DELL'OLIO	FILTRE À HUILE	1
9	REC93210-19MJ1	93210-19MJ1	TÓRICA	O-RING	O-RING	JOINT TORIQUE	2
10	REC90480-20M05	90480-20M05	TAPÓN	CAP	TAPPO	BOUCHON	1
11	REC60H-12416-00	6G5-12416-00	VÁLVULA DE PRESIÓN	VALVE, PRESSURE CONTROL	VALVOLA ANTIPRESSIONE	SOUPAPE DE DEPRESSION	1
12	REC90501-16M11	90501-16M11	RESORTE	SPRING	MOLLA	RESSORT	1
13	CM67F-11325-01A	67F-11325-01	ÁNODO	ANODE	ANODO	ANODE	2
14	REC67F-11328-00	67F-11328-00	TAPÓN	CAP	TAPPO	BOUCHON	2
15	REC90430-06M03	90430-06M03	JUNTA	GASKET	GUANIZIONE	JOINT	2
16	PAF15-04000003	90430-14115	JUNTA	GASKET	GUANIZIONE	JOINT	1
17	PAF15-04000002	90340-14M06	TORNILLO DRENAJE	BOLT, DISCHARGING OIL	VITE DRENAGGIO	VIS DE VIDANGE	1
18	REC67F-12411-01	67F-12411-01	TERMOSTATO	THERMOSTAT	TERMOSTATO	THERMOSTAT	1
19	REC63P-12414-00	63P-12414-00	JUNTA TAPA TERMOSTATO	GASKET, THERMOSTAT COVER	GUARNIZIONE COPERCHIO TERMOSTATO	JOINT COUVERCLE DE THERMOSTAT	1
20	CM68T-11325-00A	68T-11325-00	ÁNODO	ANODE	ANODO	ANODE	8
21	REC63P-41114-A3	63P-41114-A1	JUNTA	GASKET	GUARNIZIONE	JOINT	1
22	CM63P-11325-11A	63P-11325-11	ÁNODO	ANODE	ANODO	ANODE	4
23	TEN01165	63P-11325-21	ÁNODO	ANODE	ANODO	ANODE	1
24	PAGB/T818-M5X16	98780-05016	TORNILLO	SCREW	VITE	VIS	1
25	REC93606-12019	93606-12019	PIN CENTRADOR	HOLLOW PIN	SPINOTTO DI CENTRAGGIO	PIN DE CENTRAGE	1
26	REC63P-11181-00	63P-11181-00	JUNTA CULATA	GASKET, CYLINDER HEAD	GUARNIZIONE TESTATA	JOINT DE CULASSE	1
27	PAF4-04000006	90430-08143	JUNTA	GASKET	GUANIZIONE	JOINT	4
28	NGKLFR5A-11	94702-00391	BUJÍA	SPARK PLUG	CANDELA	BOUGIE	4
29	PAGB/T5783-M6X30	97095-06030	PERNO	STUD	BULLONE	BOULON	13
30	PAF15-07010027	90480-12072	TAPÓN	CAP	TAPPO	BOUCHON	5
31	REC93102-60004	93102-60004	RETÉN DE ACEITE	OIL SEAL	PARAOLIO	JOINT SPI	1
32	REC63P-46241-00	63P-46241-00	CORREA DISTRIBUCIÓN	BELT, TIMING	CINGHIA DISTRIBUZIONE	COURROIE DISTRIBUTION	1
33	REC93102-38008	93102-38008	RETÉN DE ACEITE	OIL SEAL	PARAOLIO	JOINT SPI	2
34	REC69J-12111-00	69J-12111-00	VÁLVULA ADMISIÓN Ø92.5 mm	VALVE, INTAKE Ø92.5 mm	VALVOLA ASPIRAZIONE Ø92.5 mm	SOUPAPE D ADMISSION Ø92.5 mm	8
35	REC69J-12119-00	69J-12119-00	RETÉN DE ACEITE	OIL SEAL	PARAOLIO	JOINT SPI	16



REC10W30U3
REC10W30U6
REC10W40U3
REC10W40U6

4T STROKES F200A/C • F225A/B/C • F250A/B

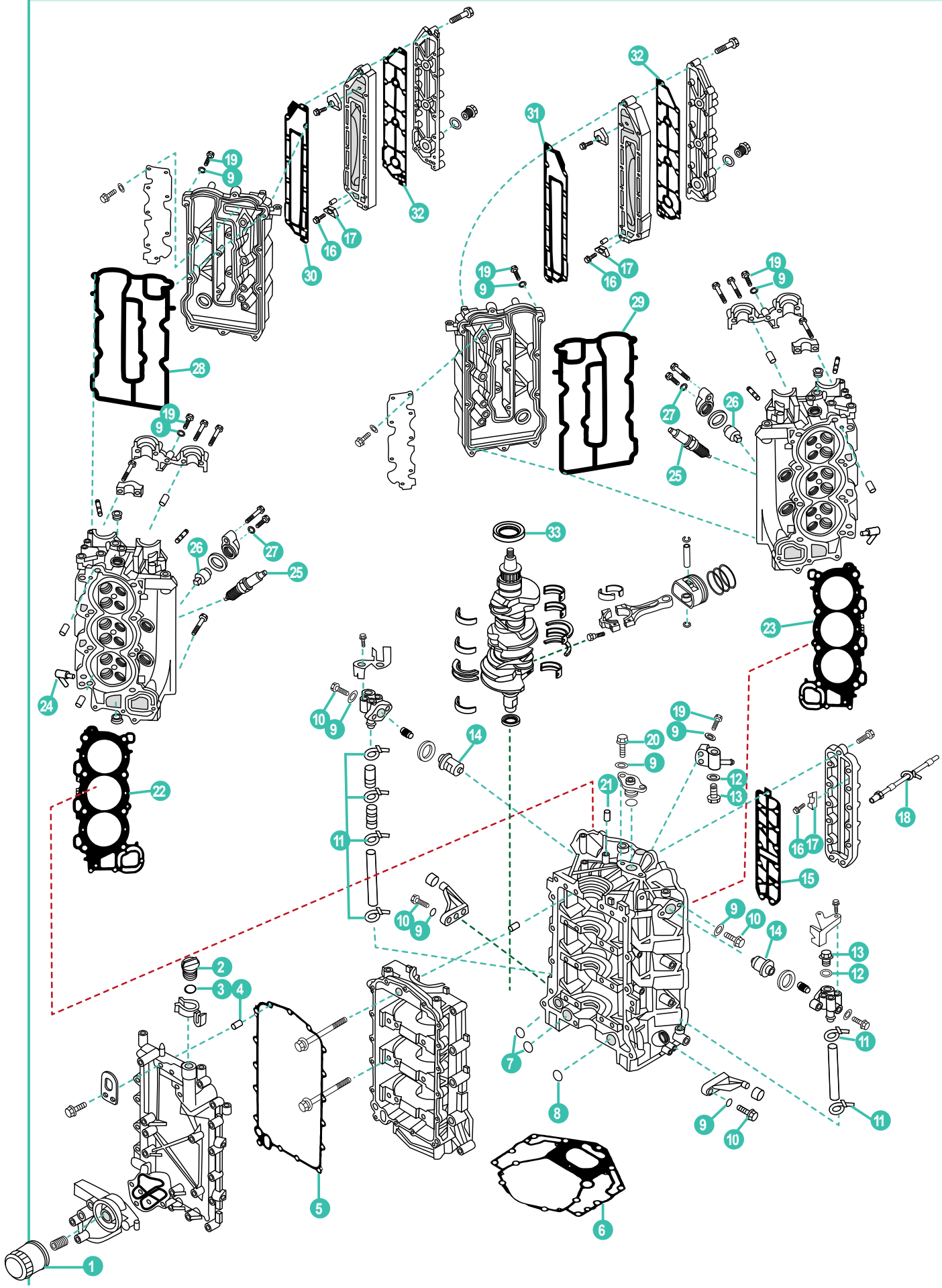

	REF	OEM					UN.
1	REC35-822626Q15	69J-13440-01	FILTRO ACEITE	OIL FILTER	FILTRO DELL'OLIO	FILTRE À HUILE	1
2	PAF15-07050004	6G8-15363-00	TAPÓN ACEITE	PLUG, OIL	TAPPO OLIO	BOUCHON REMPLISSAGE D'HUILE	1
3	PAJASOF40431-025	93210-24M79	TÓRICA	O-RING	O-RING	JOINT TORIQUE	1
4	REC93606-12019	93606-12019	PIN CENTRADOR	HOLLOW PIN	SPINOTTO DI CENTRAGGIO	PIN DE CENTRAGE	2
5	REC69J-15451-00	69J-15451-00	JUNTA	GASKET	GUANIZIONE	JOINT	1
6	REC69J-11351-11	69J-11351-11	JUNTA BASE MOTOR	GASKET ENGINE	GUARNIZIONE BASE MOTORE	JOINT MOTEUR	1
7	REC93210-19MJ1	93210-19MJ1	TÓRICA	O-RING	O-RING	JOINT TORIQUE	2
8	REC93210-25552	93210-25552	TÓRICA	O-RING	O-RING	JOINT TORIQUE	1
9	PAGB/T97.1-6	92995-06600	ARANDELA	WASHER	RONDELLA	RONDELLE	28
10	PAGB/T5782-M6X25	97095-06025	PERNO	STUD	BULLONE	BOULON	8
11	REC09401-11425	90465-11M59	BRIDA	CLAMP	FLANGIA	COLLIER	6
12	PAF15-04000003	90430-14115	JUNTA	GASKET	GUARNIZIONE	JOINT	2
13	PAF15-04000002	90340-14M06	TORNILLO DRENAJE	BOLT, DISCHARGING OIL	VITE DRENAGGIO	VIS DE VIDANGE	2
14	REC67F-12411-01	67F-12411-01	TERMOSTATO	THERMOSTAT	TERMOSTATO	THERMOSTAT	2
15	REC6P2-1131B-00	6P2-1131B-00	JUNTA (NO SERIE A)	GASKET (NO SERIAL A)	GUARNIZIONE (NO SERIE A)	JOINT (NO SÉRIE A)	1
16	PAGB/T820-M4X12	98780-04015	TORNILLO	SCREW	VITE	VIS	6
17	CM15026A	6E5-11325-00	ÁNODO	ANODE	ANODO	ANODE	6
18	PAHT-2.5X60	90465-11M10	BRIDA	CLAMP	FLANGIA	COLLIER	1
19	PAGB/T5783-M6X30	97095-06030	PERNO	STUD	BULLONE	BOULON	18
20	PAGB/T5783-M6X20	97095-06020	PERNO	STUD	BULLONE	BOULON	2
21	REC93606-12019	93606-12019	PIN CENTRADOR	HOLLOW PIN	SPINOTTO DI CENTRAGGIO	PIN DE CENTRAGE	1
22	REC6P2-11181-00	6P2-11181-00	JUNTA CULATA 1	GASKET, CYLINDER HEAD 1	GUARNIZIONE TESTATA 1	JOINT DE CULASSE 1	1
23	REC6P2-11182-00	6P2-11182-00	JUNTA CULATA 2	GASKET, CYLINDER HEAD 2	GUARNIZIONE TESTATA 2	JOINT DE CULASSE 2	1
24	PAF15-04000005	676-11372-00	NIPLE DE MANGUERA	NIPPLE	TUBO	RACCORD D'EAU	1
25	NGKLFR6A-11	94702-00400	BUJÍA	SPARK PLUG	CANDELA	BOUGIE	6
26	CM67F-11325-01A	67F-11325-01	ÁNODO	ANODE	ANODO	ANODE	2
27	REC90430-06M03	90430-06M03	JUNTA	GASKET	GUANIZIONE	JOINT	2
28	REC6P2-11193-00	6P2-11193-00	JUNTA TAPA DE CULATA 1	GASKET, CYLINDER HEAD COVER 1	GUARNIZIONE, COPERCHIO TESTATA 1	JOINT DE CACHE CULBUTEUR 1	1
29	REC6P2-11194-00	6P2-11194-00	JUNTA TAPA DE CULATA 2	GASKET, CYLINDER HEAD COVER 2	GUARNIZIONE, COPERCHIO TESTATA 2	JOINT DE CACHE CULBUTEUR 2	1
30	REC6P2-41122-00	6P2-41122-00	JUNTA	GASKET	GUANIZIONE	JOINT	1
31	REC6P2-41112-00	6P2-41112-00	JUNTA	GASKET	GUANIZIONE	JOINT	1
32	REC6P2-41114-00	6P2-41114-00	JUNTA	GASKET	GUANIZIONE	JOINT	2
33	REC93102-63004	93102-63008	RETÉN DE ACEITE	OIL SEAL	PARAOLIO	JOINT SPI	1
34	PAPS2700.04.03	51Y-12119-00	RETÉN DE ACEITE	OIL SEAL	PARAOLIO	JOINT SPI	24
35	REC93102-38008	93102-38008	RETÉN DE ACEITE	OIL SEAL	PARAOLIO	JOINT SPI	4
36	REC6P2-46241-02	6P2-46241-01	CORREA DISTRIBUCIÓN	BELT, TIMING	CINGHIA DISTRIBUZIONE	COURROIE DISTRIBUTION	1

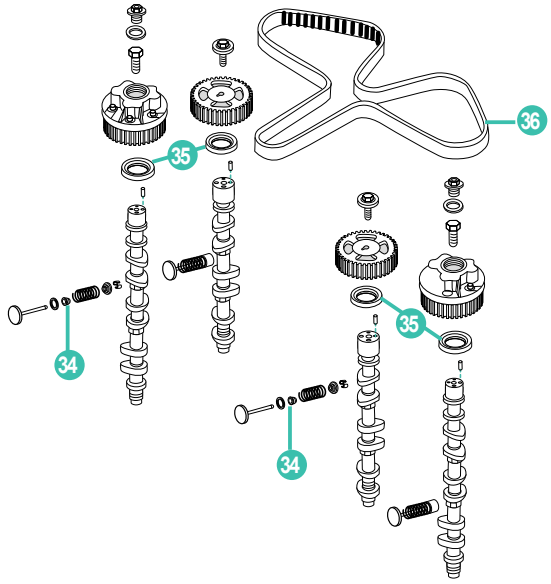

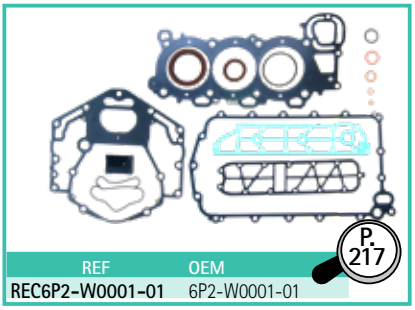

REF	OEM
REC6P2-W0001-01	6P2-W0001-01

P. 217



P. 40

REC10W30U3
REC10W30U6
REC10W40U3
REC10W40U6

4T STROKES F300A • F350A



	REF	OEM					UN.
1	RECN26-13440-00	N26-13440-00	FILTRO ACEITE	OIL FILTER	FILTRO DELL'OLIO	FILTRE À HUILE	1
2	CM63P-11325-01A	63P-11325-01	ÁNODO	ANODE	ANODO	ANODE	3
3	REC93606-12019	93606-12019	PIN CENTRADOR	HOLLOW PIN	SPINOTTO DI CENTRAGGIO	PIN DE CENTRAGE	5
4	REC6AW-15451-00	6AW-15451-00	JUNTA CÁRTER	CRANK CASE COMPLEX GASKET	GUARNIZIONE COPPA L'OLLIO	JOINT DE CACHE CULBUTEUR	1
5	PAF25-04000007	93604-08062	PIN CENTRADOR	HOLLOW PIN	SPINOTTO DI CENTRAGGIO	PIN DE CENTRAGE	2
6	PAJASOF40431-025	93210-24M79	TÓRICA	O-RING	O-RING	JOINT TORIQUE	1
7	PAF15-07050004	6G8-15363-00	TAPÓN ACEITE	PLUG, OIL	TAPPO OLIO	BOUCHON REMPLISSAGE D'HUILE	1
8	REC6AW-11351-00	6AW-11351-00	JUNTA BASE MOTOR	GASKET ENGINE	GUARNIZIONE BASE MOTORE	JOINT DE TETE MOTRICE	1
9	TEN01172	6AW-1132R-00	ÁNODO	ANODE	ANODO	ANODE	2
10	REC6AW-12411-00	6AW-12411-00	TERMOSTATO	THERMOSTAT	TERMOSTATO	THERMOSTAT	2
11	TEN01177	6AW-1132P-00	ÁNODO	ANODE	ANODO	ANODE	8
12	REC6AW-11182-00	6AW-11182-00	JUNTA DE CULATA 2	HEAD GASKET 2	GUARNIZIONE TESTATA 2	JOINT DE CULASSE 2	1
13	REC6AW-11181-00	6AW-11181-00	JUNTA DE CULATA 1	HEAD GASKET 1	GUARNIZIONE TESTATA 1	JOINT DE CULASSE 1	1
14	NGKLFR6A-11	94702-00400	BUJÍA	SPARK PLUG	CANDELE	BOUGIE	
15	TEN01170	6AW-11325-00	ÁNODO	ANODE	ANODO	ANODE	
16	REC67F-11328-00	67F-11328-00	TAPÓN	CAP	TAPPO	BOUCHON	
17	REC90430-06M03	90430-06M03	JUNTA	GASKET	GUARNIZIONE	JOINT	
18	PAGB/T97.1-8	92995-08600	ARANDELA	WASHER	RONDELLA	RONDELLE	

4T STROKES

JUNTAS DE CULATA | CYLINDER HEAD GASKET | GUARNIZIONE DE TESTATA | JOINTS DE CULASSE

REF	OEM
PAF2.6-04000001	69M-11181-00

F2.5 (2003+)

P. 173



REF	OEM
PAF4-04000014	67D-11181-A0

F4 (1998-2009)

P. 175



new

REF	OEM
PAF6-04000002	6BX-11181-00

F4B/M (2010+)
F5A/M (2010+)
F6C/M (2010+)

P. 176



REF	OEM
REC6G8-11181-A1	6G8-11181-A1

F8/9.9 (1985-05)

P. 181



REF	OEM
PAF15-07000100	66M-11181-10

F9.9/13.5/15 (1998-08)

P. 185

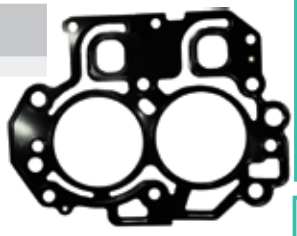

REF	OEM
REC6AG-11181-00	6AG-11181-00

F9.9/15/20 (2007+)

P. 187



REF	OEM
REC6BL-11181-00	6BL-11181-00

F20/25
FT25
T25 (2009+)

P. 195

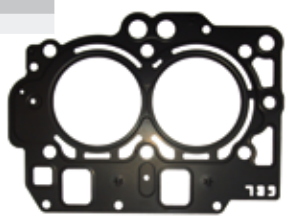

REF	OEM
PAF25-05040000	65W-11181-30

F20/25
T25
F45/50 (1998-09)

P. 191

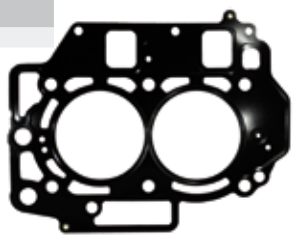

REF	OEM
REC67C-11181-01	67C-11181-01

F30/40 (2000-09)

P. 197

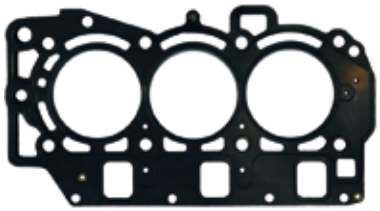

REF	OEM
REC6BG-11181-00	6BG-11181-00

F30/40 (2009+)

P. 201

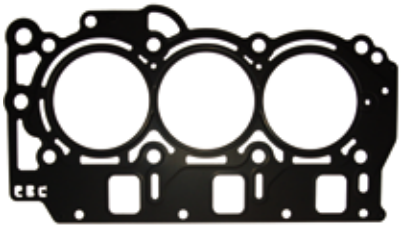

REF	OEM
REC6CJ-11181-00	6CJ-11181-00

F40GE/70
(2011+)

P. 205

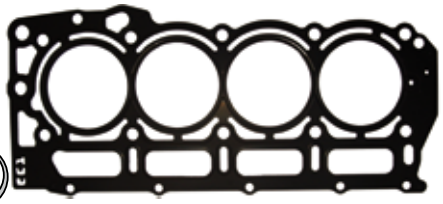

REF	OEM
REC67F-11181-03	67F-11181-03

F75/80/100/115
(1999+)

P. 209



REF	OEM
REC63P-11181-00	63P-11181-00

F150
FL150 (2004+)

P. 211



YAMAHA

RECAMBIOS MARINOS

REF	OEM
REC6DA-11181-00	6DA-11181-00

F175/200
FL200 (2013+)

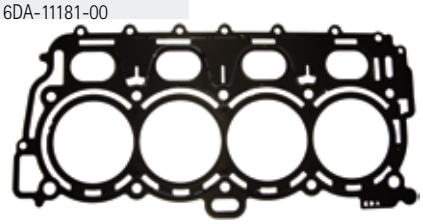

REF	OEM
REC6CB-11181-00	6CB-11181-00

F225/250/300
LF-FL225/250/300 (2011+)

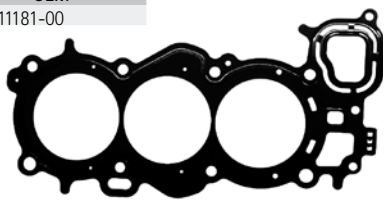

REF	OEM	
REC6P2-11182-00	6P2-11182-00	BABOR | PORT | BABORDO | GAUCHE
REC6P2-11181-00	6P2-11181-00	ESTRIBOR | STD | TRIBORDO | DROIT

F200/225/250
FL-LF 200/225/250 (2006-13)

P. 213



REC6P2-11182-00



REC6P2-11181-00

REF	OEM	
REC6AW-11181-00	6AW-11181-00	BABOR | PORT | BABORDO | GAUCHE
REC6AW-11182-00	6AW-11182-00	ESTRIBOR | STD | TRIBORDO | DROIT

F300/FL300
(2008+)

P. 214



REC6AW-11181-00



REC6AW-11182-00

REF	OEM	
REC69J-11182-03	69J-11182-03	BABOR | PORT | BABORDO | GAUCHE
REC69J-11181-03	69J-11181-03	ESTRIBOR | STD | TRIBORDO | DROIT

F200/225
FL200/225 (2002-07)



REC69J-11182-03



REC69J-11181-03

4T STROKES

KITS
JUNTAS DE CULATA

CYLINDER HEAD GASKET KIT

KIT
GUARNIZIONE TESTATA

KITS
JOINTS DE CULASSE

REF	OEM
REC6G8-W0001-A3	6G8-W0001-A3

F9.9 (1996-06)
F8BM (1996-99)



REF	OEM
REC66M-W0001-01	66M-W0001-01

F15 (2001-04)
F13.5 (2002-04)
FT 9.9/T9.9 (2001-04)
F9.9 (2001-04)

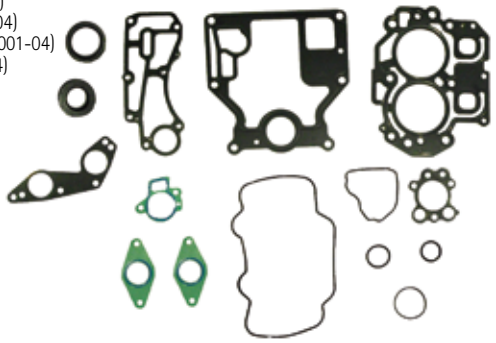

REF	OEM
REC65W-W0001-00	65W-W0001-00

F20/25 (1998-01)
T25/FT25 (2000-01)

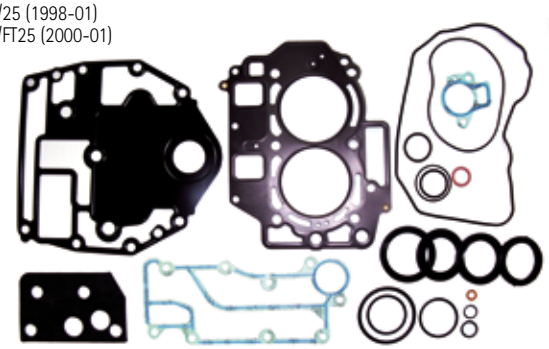

REF	OEM
REC67C-W0001-01	67C-W0001-00 67C-W0001-01

F30 ALL
F40ALL (2000-09)

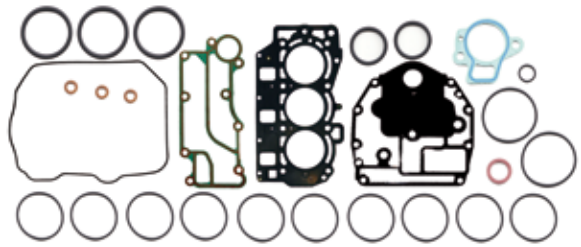

new

REF	OEM
REC6P2-W0001-01	6P2-W0001-00 6P2-W0001-01

FL/LF/F250 AET/TX
6P22 / 6P32 (2006)
FL/F200C 6AL1-6AM6 (2006-11)
FL/F225B/C 6AS1-6BBA (2007-11)
LF/FL/F250A/B/T 6BR2-6P36 (2007-11)

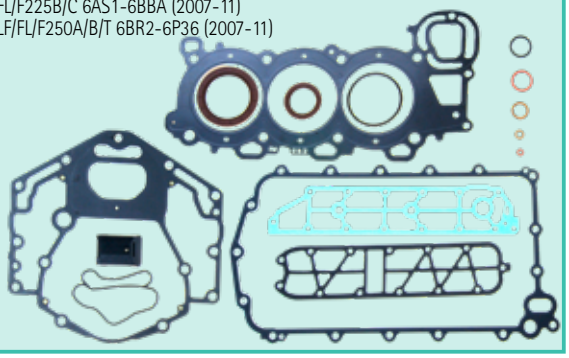

new

REF	OEM
REC67F-W0001-00	67F-W0001-00

F75 (2003-17)
F80 (1999-03)
F100 (1999-03)
F90 (2003-17)
F115 (2000-15)

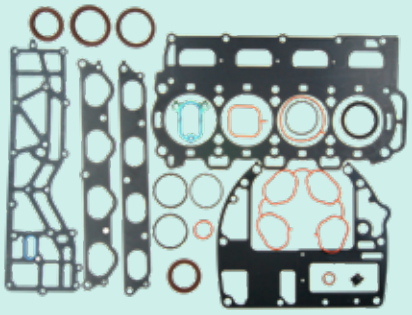

4T STROKES

JUNTAS BASE DE MOTOR — CYLINDER GASKET

GUARNIZIONE BASE MOTORE — JOINTS DE TÊTE MOTRICE

REF	OEM
PAF2.6-00000003	69M-45113-A0

F2.5



REF	OEM
PAF6-00000001	6BX-45113-00

F4/F5/F6

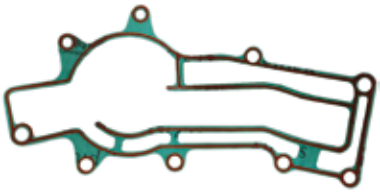

REF	OEM
PAF4-00000006	67D-45113-A0

F4

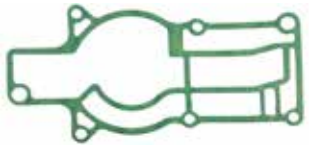

REF	OEM
PAF15-00000014	66M-11351-10

T/FT9.9
F9.9
F15
F13.5



REF	OEM
REC6G8-11351-A0	6G8-11351-A0

T/FT 9.9
F9.9
F8

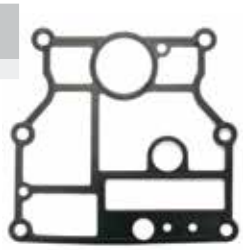

REF	OEM
PAF25-00000013	65W-11351-10

F20
F25
T/FT25



REF	OEM
REC6AH-11351-00	6AH-11351-10

F9.9
F13.5
F15
F20

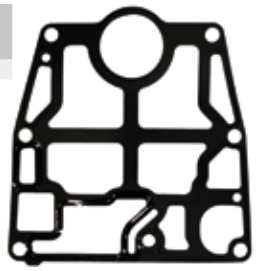

REF	OEM
REC63P-11351-01	63P-11351-01

F150
F175
F200

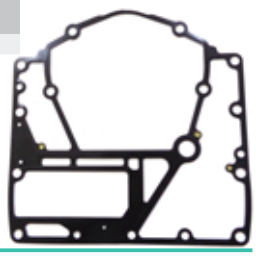

REF	OEM
REC67C-11351-00	67C-11351-01

F40
T/FT50
F50
T/FT60
F30
F60

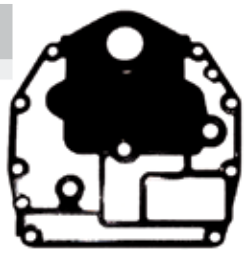

REF	OEM
REC69J-11351-11	69J-11351-11

F200
F225
F250



REF	OEM
REC68V-11351-00	68V-11351-00

F75
F80
F90
F115
F100



REF	OEM
REC6AW-11351-00	

F300
F350

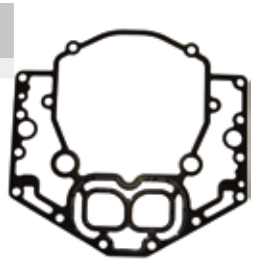

4T STROKES GUÍA JUNTAS DE MOTOR — ENGINE GASKET GUIDE — GUIDA GUARNIZIONE MOTORE — GUIDE JOINTS DE MOTEURS

		CYL	JUNTA CULATA CYLINDER HEAD GASKET GUARNIZIONE TESTATA JOINT DE CULASSE	KIT	JUNTA BASE MOTOR CYLINDER GASKET GUARNIZIONE BASE MOTORE JOINT DE TETE MOTRICE
F2.6A/M	2003	1	PAF2.6-04000001		PAF2.6-00000003
F4A/M	1998	1	PAF4-04000014		PAF4-00000006
F8A/B	1985-99	2	REC6G8-11181-A1	REC6G8-W0001-A3	REC6G8-11351-A0
F9.9A/B	1985-99	2	REC6G8-11181-A1	REC6G8-W0001-A3	REC6G8-11351-A0
F9.9C	2001-07	2	PAF15-07000100	REC66M-W0001-01	PAF15-00000014
F9.9H	2008	2	REC6AG-11181-00		REC6AH-11351-00
FT9.9D, F13.5 A	2001-07	2	PAF15-07000100	REC66M-W0001-01	PAF15-00000014
F13.5B, F15C/E/M	2008	2	REC6AG-11181-00		REC6AH-11351-00
F15A/E/M/P	2001-07	2	PAF15-07000100	REC66M-W0001-01	PAF15-00000014
F20B/E/M	2008	2	REC6AG-11181-00		REC6AH-11351-00
F20D	2011	2	REC6BL-11181-00		
F20A	1998	2	PAF25-05040000	REC65W-W0001-00	PAF25-00000013
T25/F25A/A/E/M	1998-09	2	PAF25-05040000	REC65W-W0001-00	PAF25-00000013
T25/F25D/M/F	2009	2	REC6BL-11181-00		
F30A/E/TR, F40B/E/TR	2000-09	3	REC67C-11181-01	REC67C-W0001-01	REC67C-11351-00
F30B, F40F	2009	3	REC6BG-11181-00		
F40G, F70A	2011	4	REC6CJ-11181-00		
F80A/B/C/TLR	1999	4	REC67F-11181-03	REC67F-W0001-00	REC68V-11351-00
F100A/B/D/TLR	1999	4	REC67F-11181-03	REC67F-W0001-00	REC68V-11351-00
F115A/TX/TLR	2000	4	REC67F-11181-03	REC67F-W0001-00	REC68V-11351-00
F150A/T/B	2004	4	REC63P-11181-00		REC63P-11351-01
F17A	2014	4	REC6DA-11181-00		REC63P-11351-01
F200A/TX/TR	2002-07	6	REC69J-11181-03 REC69J-11182-03		REC69J-11351-11
F200A/C, F225A/B/C	2007	6	REC6P2-11181-00 REC6P2-11182-00	REC6P2-W0001-01	REC69J-11351-11
F200B/F/G/CA	2013	4	REC6DA-11181-00		REC63P-11351-01
F225A/TR/TX/TUR	2002-07	6	REC69J-11181-03 REC69J-11182-03		REC69J-11351-11
F225CA/F, F250CA/D	2011	6	REC6CB-11181-00		
F250A/B/T	2009	6	REC6P2-11181-00 REC6P2-11182-00	REC6P2-W0001-01	REC69J-11351-11
F300A/TR, F350A/C/T	2008	8	REC6AW-11181-00 REC6AW-11182-00		REC6AW-11351-00
F300B/CA	2011	6	REC6CB-11181-00		

CIGÜEÑAL — CRANKSHAFT — ALBERO MOTORE — VILEBREQUIN

4T STROKES — GUÍA CIGÜEÑAL COMPLETO — GUIDE CRANKSHAFT ASSY — GUIDA ALBERO MOTORE COMPLETO — GUIDE VILEBREQUIN COMPLET

4T STROKES		REF
F2.5	2003-13	PAF2.6-04030000
F4	1998-09	PAF4-04030000
F9.9	1998-09	PAF15-07030000
F9.9	2009-19	PAF20-05020004
F13.5	1999-07	PAF15-07030000
F13.5	2007-09	PAF20-05020004
F15	1998-07	PAF15-07030000

4T STROKES		REF
F15	2007-19	PAF20-05020004
F20/AE/S/TL	2003-06	PAF25-05020001
F20	2007-19	PAF20-05020004
T25E/TL/R/B	2000-09	PAF25-05020001
F25	1999-09	PAF25-05020001
F45AET	1999	PAF25-05020001
F50TJR	1999	PAF25-05020001

PISTONES — PISTONS — PISTONI — PISTONS

4T STROKES — KITS DE PISTONES — PISTON KITS — KIT PISTONE — KIT PISTON

	STD REF	OEM
	PAF2.6-04020001	69M-E1631-01-96
	REC69M-E1603-01	69M-E1603-01
	PAF2.6-04020005	69M-E1633-00



F2.5AMH/MLH/MH/MSH (2004+)

	STD REF	OEM
	PAF20-05020001	6AH-11631-00
	PAF20-05020100	6AH-11603-00
	PAF20-05020003	137-11633-10
	PAF20-05020002	93450-17129



F9.9 HMH, HE (2009+)
F13.5 B, BMH (2007-09)
F15 CMH, MH, ELH, CWH, CE (2007+)
F20 BMH, ELH, BE, MH (2007+)

	STD REF	OEM
	PAF4-04020200	68D-E1631-00-96
	REC68D-E1603-00	68D-E1603-00
	PAF4-04020005	68D-E1633-00
	PAF4-04020006	93450-14088



F4A/MSHA/AMH/MLHB-D/MH (2002-09)

	STD REF	OEM
	PAF25-05020100	65W-11631-00-96
	REC67C-11603-00	67C-11603-00
	PAF25-05020105	62Y-11633-00
	PAF25-05020106	93450-17129



F20AES/AET/AE-S (2003-06)
F25ELH/AE/AW/A/AET/MHZ/MHA/AM/AEH/A-ES/
T25ELRZ-T/FT25B (1998-09)
F30A/ERZ/MLH/AET/ELHB/AMH/TR/AWH/ETL (2001-09)
F40B/ELH/BE/ERZ/ERA/BMH/BWH (2000-09)

	STD REF	OEM
	PAF15-07020001	66M-11631-00-96
	REC66N-11603-00	66N-11603-00
	PAF15-07020006	634-11633-00
	PAF15-07020005	93450-15023



F9.9C/CE/CMH/CWH/D (1998-08)
F13.5AMH/AEH/AEP (2000-07)
FT/F15A/PR/PLR/AEP/ELH/MH/AE/AM (2000-07

2T STROKES **2B • 2MSH**

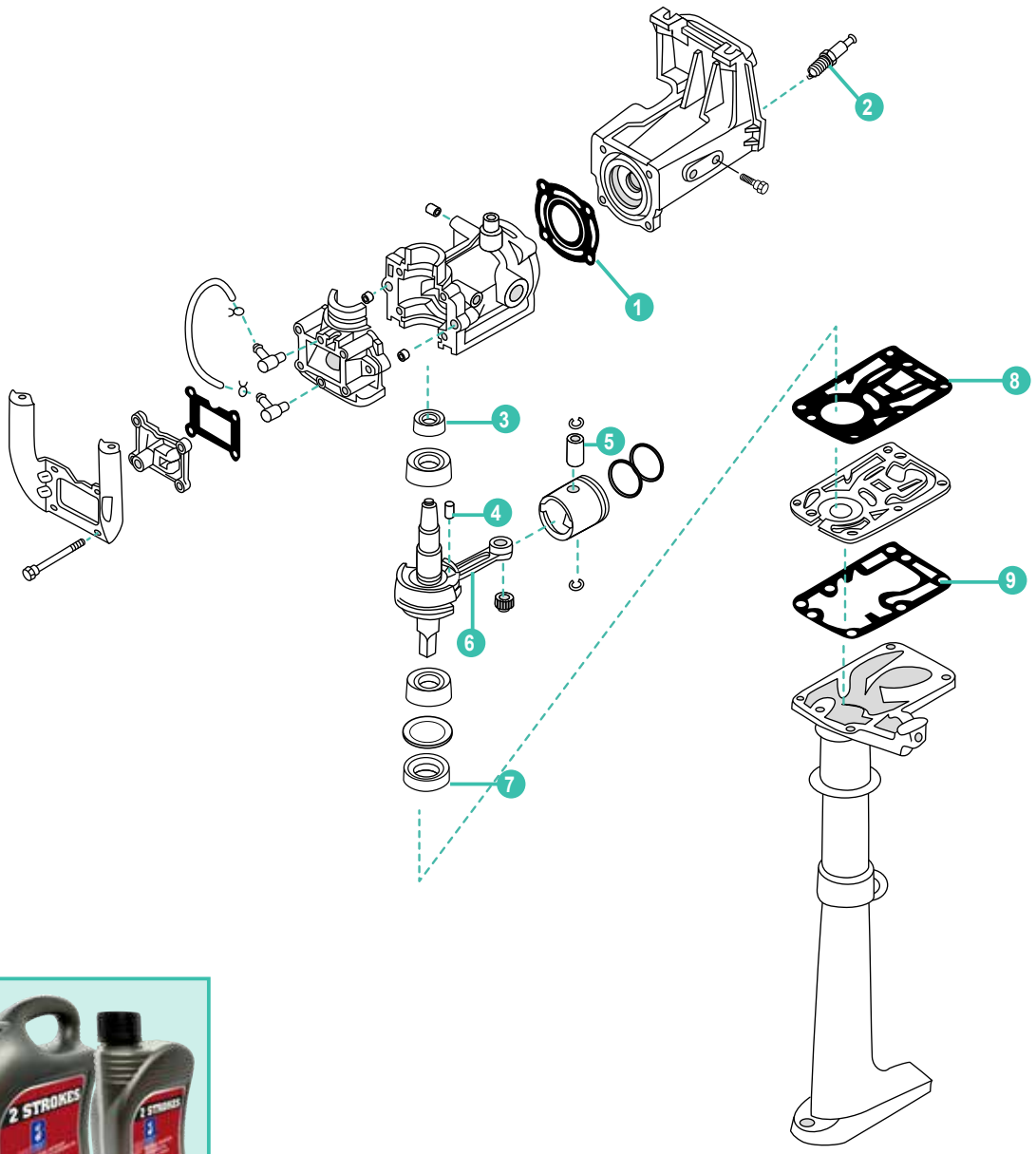



REC2TU3
REC2TU6

	REF	OEM					UN.
1	REC6F8-11181-A0	6F8-11181-A1	JUNTA CULATA	GASKET, CYLINDER HEAD	GUARNIZIONE TESTATA	JOINT DE CULASSE	1
2	NGKB7HS	94702-00040	BUJÍA	SPARK PLUG	CANDELA	BOUGIE	1
3	PAF2.6-04010001	93102-20070	RETÉN DE ACEITE	OIL SEAL	PARAOLIO	JOINT SPI	1
4	REC646-11681-00	646-11681-00	PIN DE BIELA	PIN, CRANK	SPINOTTO BIELLA	PIN DE BIELLE	1
5	REC646-11633-00	646-11633-00	PIN, PISTÓN	PIN, PISTON	SPINOTTO PISTONE	AXE DE PISTON	1
6	REC646-11651-02	646-11651-02	BIELA	CONNECTING ROD	BIELLA	BIELLE	1
7	REC93102-15M32	93102-15M32	RETÉN DE ACEITE	OIL SEAL	PARAOLIO	JOINT SPI	1
8	REC6A1-14613-A0	6A1-14613-A0	JUNTA TUBO DE ESCAPE	GASKET, EXHAUST PIPE	GUARNIZIONE, TUBO SCARICO	JOINT, PIPE D'ECHAPPEMENT	1
9	REC646-14623-A1	646-14623-A1	JUNTA	GASKET	GUARNIZIONE	JOINT	1

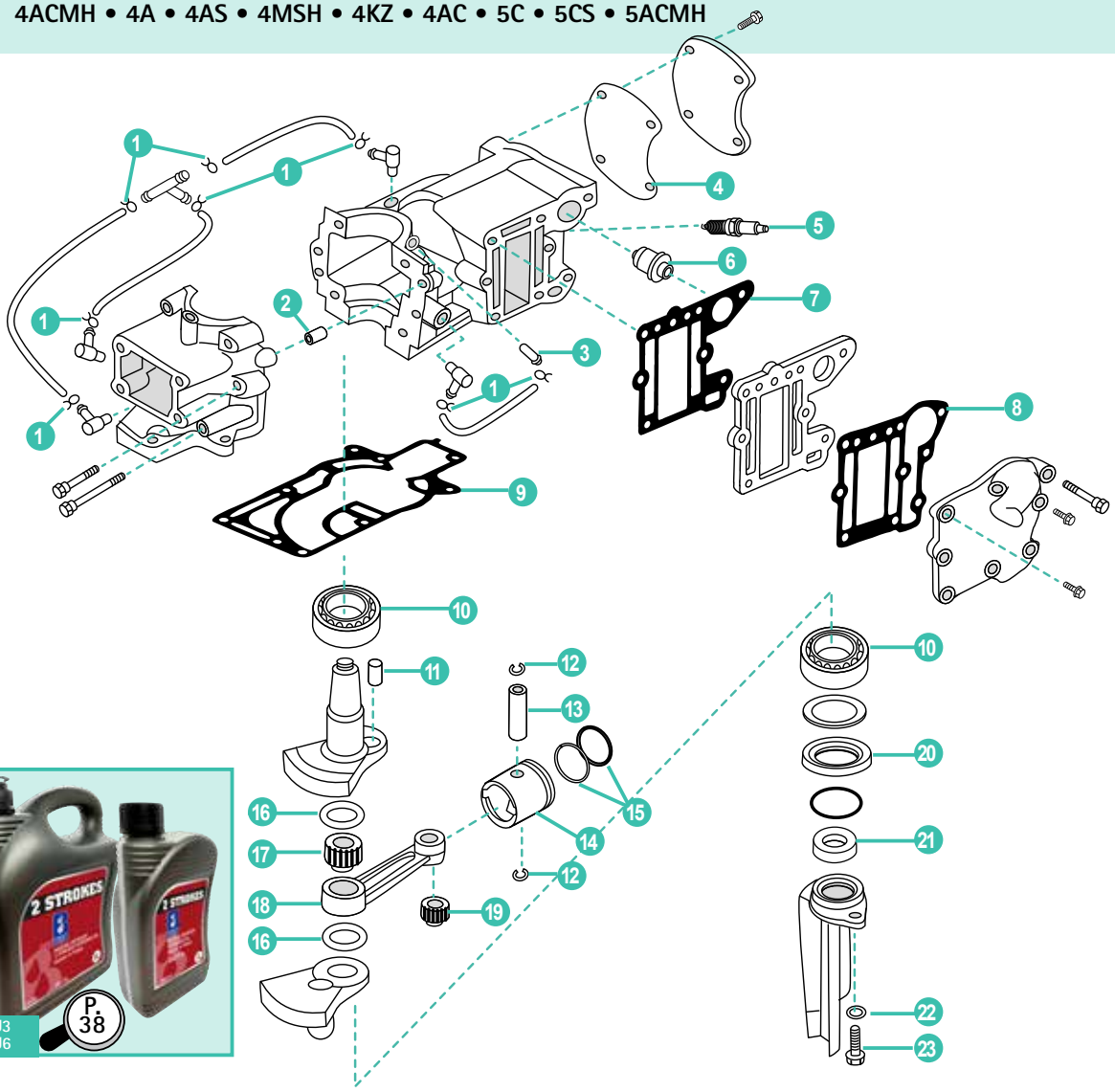

	REF	OEM					UN.
1	PAHT-2.5X60	90467-06016	CLIP ABRAZADERA	CLIP	CLIP FASCETTA	COLLIER	8
2	REC93606-12019	93606-12019	PIN CENTRADOR	HOLLOW PIN	SPINOTTO DI CENTRAGGIO	PIN DE CENTRAGE	2
3	REC624-14485-00	624-14485-00	PIPA DE AGUA	PIPE, WATER	TUBO	RACCORD TUYAU D'EAU	1
4	REC6E0-11193-A1	6E0-11193-A1	JUNTA TAPA	GASKET, COVER	GAURNIZIONE COPERCHIO	JOINT COUVERCLE	1
5	NGKBR7HS	94702-00272	BUJÍA	SPARK PLUG	CANDELA	BOUGIE	1
6	REC6E5-12411-02	6E5-12411-01	TERMOSTATO	THERMOSTAT	TERMOSTATO	THERMOSTAT	1
7	REC6E0-41112-A1	6E0-41112-A1	JUNTA DE ESCAPE	EXHAUST GASKET	GUARNIZIONE DI SCARICO	JOINT D'ECHAPPEMENT	1
8	REC6E0-41114-A1	6E0-41114-A1	JUNTA EXTERIOR, TAPA DE ESCAPE	GASKET, EXHAUST OUTER COVER	GUARNIZIONE ESTERIORE, COPERCHIO SCARICO	JOINT DE COUVERCLE EXT ECHAPPEMENT	1
9	REC6E0-45113-A1	6E0-45113-A1	JUNTA BASE MOTOR	GASKET ENGINE	GUARNIZIONE BASE MOTORE	JOINT MOTEUR	1
10	REC93306-204U0	93306-204U0	RODAMIENTO	BEARING	CUSCINETTO	PALIER DE VILEBREQUIN	2
11	REC6G1-11681-00	6G1-11681-00	PIN DE CIGÜEÑAL	PIN, CRANK	SPINOTTO AALBERO MOTORE	PIN DE VILEBREQUIN	1
12	REC93450-13022	93450-13022	CIRCLIP	CIRCLIP	CIRCLIP	CIRCLIP	2
13	REC6G1-11633-00	6G1-11633-00	PIN, PISTÓN	PIN, PISTON	SPINOTTO PISTONE	AXE DE PISTON	1
14	REC6E0-11631-00-98K	6E0-11631-00-98	PISTON	PISTON STD	PISTONE	PISTON	1
15	REC6G1-11610-00	6G1-11610-00	KIT SEGMENTOS DE PISTÓN	PISTON RING KIT	KIT FASCIA PISTONE	KIT SEGMENTS	1
	REC6J1-11610-00	6J1-11610-00	KIT SEGMENTOS DE PISTÓN 5C	PISTON RING KIT 5C	KIT FASCIA PISTONE 5C	KIT SEGMENTS 5C	1
16	REC90209-18112	90209-18112	ARANDELA	WASHER	RONDELLA	RONDELLE	2
17	REC93310-418V1	93310-418V1	COJINETE DE BIELA	BEARING, CONNECTING ROD	CUSCINETTO BIELLA	PALIER DE BIELLE	1
18	REC6E0-11651-01	6E0-11651-01	COJINETE DE BIELA	BEARING, CONNECTING ROD	CUSCINETTO BIELLA	PALIER DE BIELLE	1
19	REC93310-112V0	93310-112V0	RODAMIENTO	BEARING	CUSINETTO	PALIER	1
20	REC93101-20M29	93101-20M29	RETÉN DE ACEITE	OIL SEAL	PARAOLIO	JOINT SPI	1
21	REC93101-10M25	93101-10M25	RETÉN DE ACEITE	OIL SEAL	PARAOLIO	JOINT SPI	1
22	PAGB/T97.1-6	92995-06600	ARANDELA	WASHER	RONDELLA	RONDELLE	1
23	PAGB/T5783-M6X16	97095-06016	TORNILLO	BOLT	VITE	VIS	1

2T STROKES 6CMH • 6CWH • 6MSH • 6DMH • 6MH • 6D 8CMH • 8CWH • 8MSH • 8MH • 8D

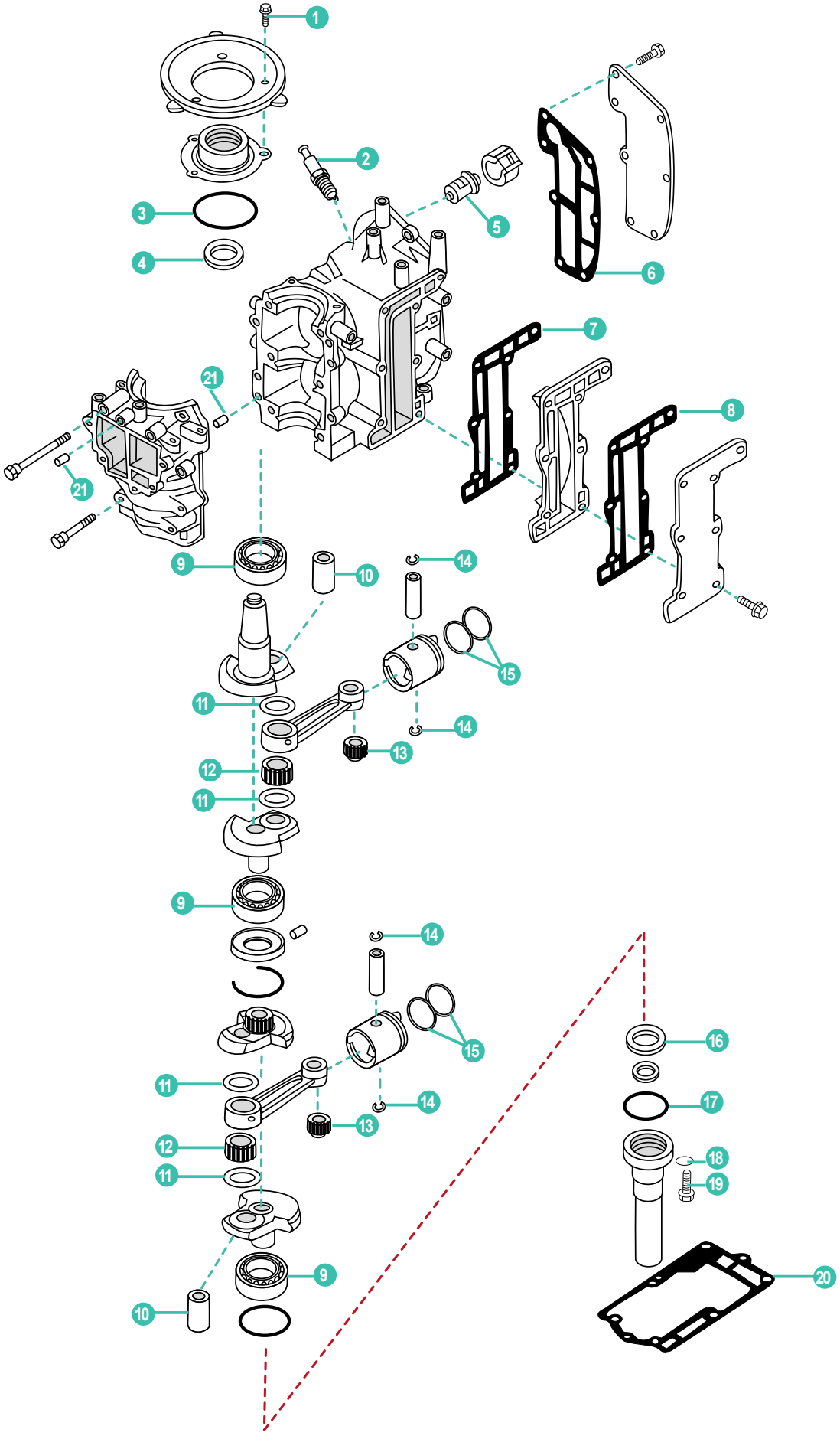

	REF	OEM					UN.
1	PAGB/T5783-M5x12	97013-06016	TORNILLO	BOLT	VITE	VIS	3
2	NGKBR7HS-10	94702-00271	BUJÍA	SPARK PLUG	CANDELA	BOUGIE	2
	NGKBR6HS-10	94702-00274	BUJÍA	SPARK PLUG	CANDELA	BOUGIE	2
3	REC93210-54M54	93210-54M54	TÓRICA	O-RING	O-RING	JOINT TORIQUE	1
4	REC93102-20M25	93102-20M25	RETÉN DE ACEITE	OIL SEAL	PARAOLIO	JOINT SPI	1
5	REC6E5-12411-02	6E5-12411-01	TERMOSTATO	THERMOSTAT	TERMOSTATO	THERMOSTAT	1
6	REC6G1-11193-A1	6G1-11193-A1	JUNTA TAPA TERMOSTATO	GASKET, THERMOSTAT COVER	GUARNIZIONE COPERCHIO TERMOSTATO	JOINT COUVERCLE DE THERMOSTAT	1
7	REC6G1-41112-A1	6G1-41112-A1	JUNTA EXTERIOR, TAPA DE ESCAPE	GASKET, EXHAUST OUTER COVER	GUARNIZIONE ESTERIORE, COPERCHIO SCARICO	JOINT DE COUVERCLE EXT ECHAPPEMENT	1
8	REC6G1-41114-A0	6G1-41114-A0	JUNTA DE ESCAPE	EXHAUST GASKET	GUARNIZIONE DI SCARICO	JOINT D'ECHAPPEMENT	1
9	REC93306-204U0	93306-204U0	RODAMIENTO	BALL BEARING	CUSCINETTO	ROULEMENT À BILLE	3
10	REC6G1-11681-00	6G1-11681-00	PIN	PIN	SPINOTTO	LEVIER D'ENTRAINEMENT	2
11	REC90209-18112	90209-18112	ARANDELA	WASHER	RONDELLA	RONDELLE	4
12	REC93310-418V1	93310-418V1	COJINETE DE BIELA	BEARING, CONNECTING ROD	CUSCINETTO BIELLA	PALIER DE BIELLE	2
13	REC93310-112V0	93310-112V0	COJINETE DE BIELA	BEARING, CONNECTING ROD	CUSCINETTO BIELLA	PALIER DE BIELLE	2
14	REC93450-13022	93450-13022	CIRCLIP	CIRCLIP	CIRCLIP	CIRCLIP	4
15	REC6G1-11610-00	6N0-E1603-00	KIT SEGMENTOS DE PISTÓN	PISTON RING SET	KIT FASCIA PISTONE	KIT SEGMENTS	2
16	REC93101-20M34	93101-20M34	RETÉN DE ACEITE	OIL SEAL	PARAOLIO	JOINT SPI	1
17	REC93210-42159	93210-42159	TÓRICA	O-RING	O-RING	JOINT TORIQUE	1
18	PAGB/T97.1-6	92995-06600	ARANDELA	WASHER	RONDELLA	RONDELLE	1
19	PAGB/T5783-M6X16	97095-06016	TORNILLO	BOLT	VITE	VIS	1
20	REC6G1-45113-A1	6G1-45113-A1	JUNTA BASE MOTOR	GASKET ENGINE	GUARNIZIONE BASE MOTORE	JOINT MOTEUR	1
21	PAF25-04000007	93604-08062	PIN CENTRADOR	HOLLOW PIN	SPINOTTO DI CENTRAGGIO	PIN DE CENTRAGE	6



REC2TU3
REC2TU6

P. 38



REF	OEM
REC6G1-W0093-00	6G1-W0093-00

P. 95

2T STROKES **E8D • E8DMH**

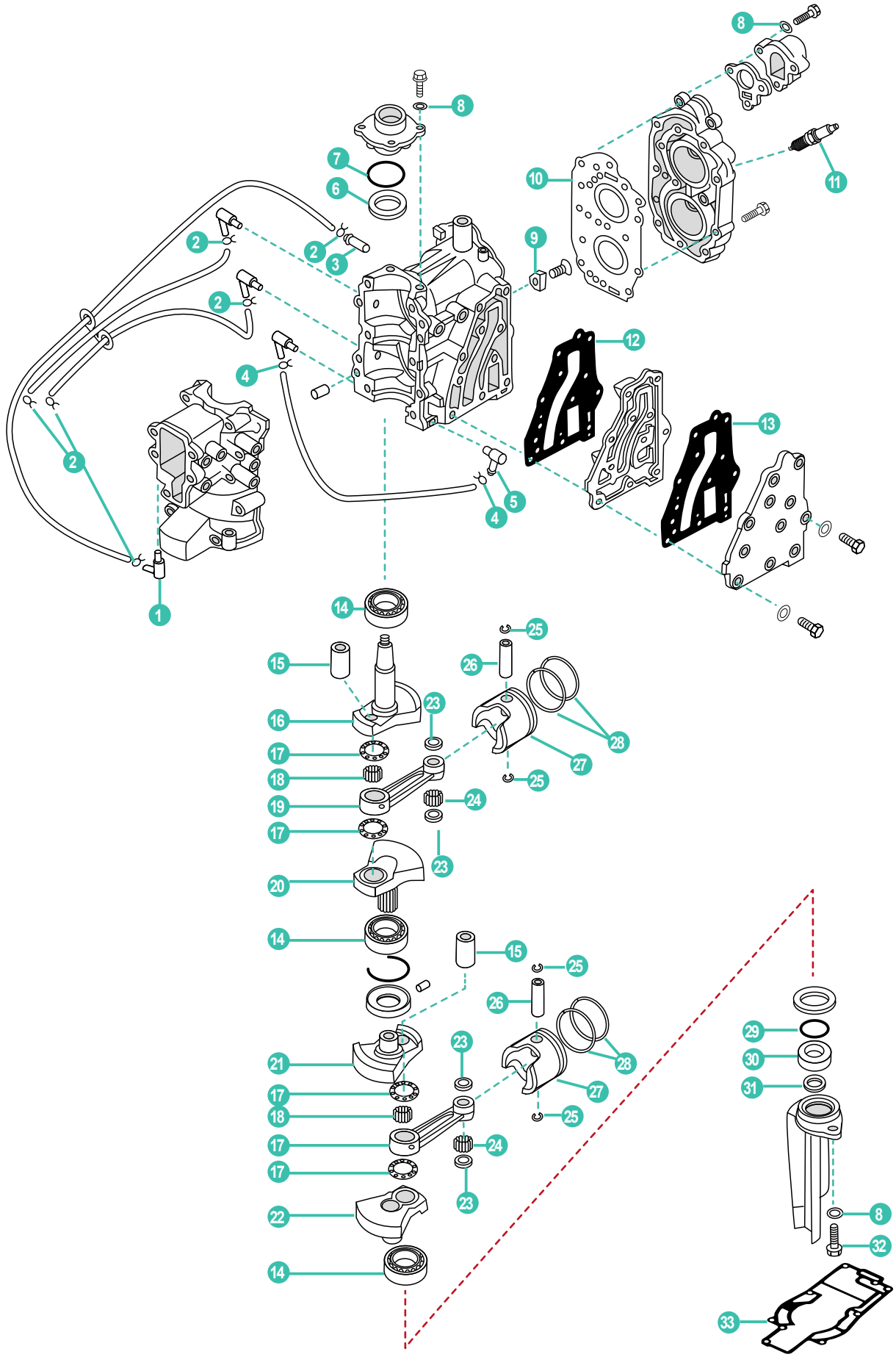

	REF	OEM					UN.
1	REC650-11370-00	650-11370-01	NIPLE DE MANGUERA	NIPPLE	TUBO	RACCORD D'EAU	1
2	PAHT-2.5X60	90467-06016	PRESILLA	CLIP	CLIP	CLIP	6
3	REC624-14485-00	624-14485-00	PIPA DE AGUA	PIPE, WATER	TUBO	RACCORD TUYAU D'EAU	1
4	PAF4-04000030	90467-09M09	PRESILLA	CLIP	CLIP	CLIP	2
5	PAF15-04000005	676-11372-00	NIPLE DE MANGUERA	NIPPLE	TUBO	RACCORD D'EAU	1
6	REC93102-20M25	93102-20M25	RETÉN DE ACEITE	OIL SEAL	PARAOLIO	JOINT SPI	1
7	REC93210-42159	93210-42159	TÓRICA	O-RING	O-RING	JOINT TORIQUE	1
8	PAGB/T97.1-6	92995-06600	ARANDELA	WASHER	RONDELLA	RONDELLE	6
9	TEN01166	664-11325-00	ÁNODO	ANODE	ANODO	ANODE	1
10	REC677-11181-A0	677-11181-A1	JUNTA CULATA	GASKET, CYLINDER HEAD	GUARNIZIONE TESTATA	JOINT DE CULASSE	1
11	NGKB7HS-10	94702-00217	BUJÍA	SPARK PLUG	CANDELA	BOUGIE	2
12	REC677-41112-A0	677-41112-A1	JUNTA DE ESCAPE	EXHAUST GASKET	GUARNIZIONE DI SCARICO	JOINT D'ECHAPPEMENT	1
13	REC677-41112-A0	677-41114-A1	JUNTA EXTERIOR, TAPA DE ESCAPE	GASKET, EXHAUST OUTER COVER	GUARNIZIONE ESTERIORE, COPERCHIO SCARICO	JOINT DE COUVERCLE EXT ECHAPPEMENT	1
14	REC93306-204U0	93306-240U0	RODAMIENTO	BALL BEARING	CUSCINETTO	ROULEMENT À BILLE	3
15	REC6G1-11681-00	6G1-11681-00	PIN	PIN	SPINOTTO	LEVIER D'ENTRAINEMENT	2
16	REC677-11412-02	677-11412-02	CIGÜEÑAL 1	CRANK 1	ALBERO MOTORE 1	VILEBREQUIN 1	1
17	REC90209-18112	90209-18112	ARABDELA	WASHER	RONDELLA	RONDELLE	4
18	REC93310-418U0	93310-418U0	COJINETE DE BIELA	BEARING, CONNECTING ROD	CUSCINETTO BIELLA	PALIER DE BIELLE	2
19	REC6E0-11651-01	6E0-11651-01	BIELA	CONNECTING ROD	BIELLA	BIELLE	2
20	REC677-11422-02	677-11422-02	CIGÜEÑAL 2	CRANK 2	ALBERO MOTORE 2	VILEBREQUIN 2	1
21	REC677-11432-02	677-11432-02	CIGÜEÑAL 3	CRANK 3	ALBERO MOTORE 3	VILEBREQUIN 3	1
22	REC677-11442-02	677-11442-02	CIGÜEÑAL 4	CRANK 4	ALBERO MOTORE 4	VILEBREQUIN 4	1
23	REC90201-12565	90201-12565	ARANDELA PLANA	WASHER PLATE	RONDELLA PIANA	RONDELLE	4
24	REC93602-14118	93602-14118	COJINETE DE BIELA	BEARING, CONNECTING ROD	CUSCINETTO BIELLA	PALIER DE BIELLE	56
25	REC93450-13022	93450-13022	CIRCLIP	CIRCLIP	CIRCLIP	CIRCLIP	4
26	REC6G1-11633-00	6G1-11633-00	PIN, PISTÓN	PIN, PISTON	SPINOTTO PISTONE	AXE DE PISTON	2
	REC677-11631-00K	677-11631-00-97	PISTÓN STD	PISTON STD	PISTONE STD	PISTON STD	2
27	REC677-11635-00K	677-11635-00	PISTÓN 0.25mm O/S	PISTON 0.25mm O/S	PISTONE 0.25mm O/S	PISTON 0.25mm O/S	2
	REC677-11636-00K	677-11636-00	PISTÓN 0.50mm O/S	PISTON 0.50mm O/S	PISTONE 0.50mm O/S	PISTON 0.50mm O/S	2
	REC647-11610-00	647-11610-00	KIT SEGMENTOS DE PISTÓN STD	PISTON RING SET STD	KIT FASCE STD	KIT SEGMENTS STD	2
28	REC647-11610-10	647-11610-10	KIT SEGMENTOS DE PISTÓN 0.25mm O/S	PISTON RING SET 0.25mm O/S	KIT FASCE 0.25mm O/S	KIT SEGMENTS 0.25mm O/S	2
	REC647-11610-20	647-11610-20	KIT SEGMENTOS DE PISTÓN 0.50mm O/S	PISTON RING SET 0.50mm O/S	KIT FASCE 0.50mm O/S	KIT SEGMENTS 0.50mm O/S	2
29	REC93210-42M70	93210-42M70	TÓRICA	O-RING	O-RING	JOINT TORIQUE	1
30	REC93101-20M29	93101-20M29	RETÉN DE ACEITE	OIL SEAL	PARAOLIO	JOINT SPI	1
31	REC93101-14M01	93101-14M01	RETÉN DE ACEITE	OIL SEAL	PARAOLIO	JOINT SPI	1
32	PAGB/T5783-M6X16	97095-06016	PERNO	STUD	BULLONE	BOULON	2
33	REC677-45113-A0	677-45113-A0	JUNTA BASE MOTOR	GASKET ENGINE	GUARNIZIONE BASE MOTORE	JOINT MOTEUR	1



REC2TU3
REC2TU6

P. 38



REF	OEM
REC677-W0093-00	677-W0093-00

P. 95

2T STROKES — 9.9F/FM/FEM/MHV • 9.9FMH/MSH • 13.5AMH • 15F/FEM/FM/MH/MSH • 15FW/MHH



REC2TU3
REC2TU6

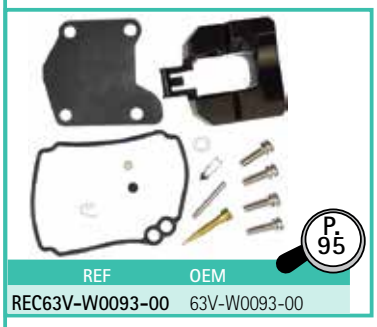

REF	OEM
REC63V-W0093-00	63V-W0093-00

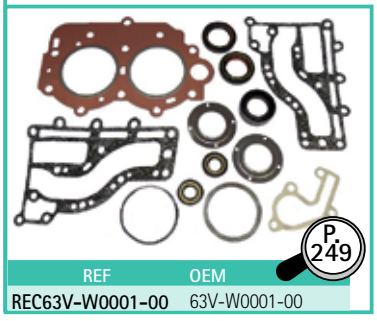

REF	OEM
REC63V-W0001-00	63V-W0001-00

	REF	OEM					UN.
1	PAGB/T5783-M6X20	90119-06MA2	TORNILLO	BOLT	VITE	VIS	4
2	REC682-12413-00-1S	682-12413-00-1S	TAPA TERMOSTATO	COVER, THERMOSTAT	COPERCHIO TERMOSTATO	COUVERCLE DE THERMOSTAT	1
3	REC682-12414-A1	682-12414-A1	JUNTA TAPA TERMOSTATO	GASKET, THERMOSTAT COVER	GUARNIZIONE COPERCHIO TERMOSTATO	JOINT COUVERCLE DE THERMOSTAT	1
4	REC6E5-12411-30	6E5-12411-30	TERMOSTATO	THERMOSTAT	TERMOSTATO	THERMOSTAT	1
5	NGKB7HS-10	94702-00271	BUJÍA	SPARK PLUG	CANDELA	BOUGIE	2
6	REC6E7-11111-01-1S	6E7-11111-01-1S	CULATA	HEAD CYLINDER	TESTATA	CULASSE	1
7	REC63V-11181-A1	63V-11181-A2	JUNTA CULATA	GASKET, CYLINDER HEAD	GUARNIZIONE TESTATA	JOINT DE CULASSE	1
8	TEN01162	682-11325-00	ÁNODO DE ZINC	ZINC ANODE	ANODO ZINCO	ANODE ZINC	1
9	REC650-14485-03	650-14485-03	NIPLE DE MANGUERA	NIPPLE	TUBO	RACCORD D'EAU	2
10	PAHT-2.5X60	90467-06016	BRIDA	CLAMP	FLANGIA	COLLIER	4
11	REC93606-12019	93606-12019	PIN CENTRADOR	HOLLOW PIN	SPINOTTO DI CENTRAGGIO	PIN DE CENTRAGE	2
12	REC624-14485-00	624-14485-00	PIPA DE AGUA	PIPE, WATER	TUBO	RACCORD TUYAU D'EAU	1
13	REC63V-41111-00-1S	63V-41111-00-1S	PLACA ESCAPE	INNER COVER, EXHAUST	PIASTRA SCARICO	PLAQUE D'ECHAPPEMENT	1
14	REC63V-41112-A0	63V-41112-A0	JUNTA TAPA	GASKET, COVER	GAURNIZIONE COPERCHIO	JOINT COUVERCLE	2
15	REC63V-41113-00-1S	63V-41113-00-1S	CUBIERTA DE ESCAPE	EXHAUST COVER	COPERCHIO SCARICO	COUVERCLE D'ECHAPPEMENT	1
16	PAF15-04000005	676-11372-00	NIPLE DE MANGUERA	NIPPLE	TUBO	RACCORD D'EAU	1
17	PAGB/T5783-M6X30	90119-06M04	TORNILLO	BOLT	VITE	VIS	13
18	REC93110-23M00	93110-23M00	RETÉN DE ACEITE	OIL SEAL	PARAOLIO	JOINT SPI	1
19	REC63V-11445-00	63V-11445-00	ESPACIADOR	COLLAR	DISTANZIALE	ENTRETOISE	2
20	REC93306-205U7	93306-205U7	RODAMIENTO	BALL BEARING	CUSCINETTO	ROULEMENT À BILLE	3
21	REC63V-11412-00	63V-11412-00	CIGÜEÑAL 1	CRANK 1	ALBERO MOTORE 1	VILEBREQUIN 1	1
22	REC63V-11422-00	63V-11422-00	CIGÜEÑAL 2	CRANK 2	ALBERO MOTORE 2	VILEBREQUIN 2	1
23	REC63V-11432-00	63V-11432-00	CIGÜEÑAL 3	CRANK 3	ALBERO MOTORE 3	VILEBREQUIN 3	1
24	REC63V-11442-00	63V-11442-00	CIGÜEÑAL 4	CRANK 4	ALBERO MOTORE 4	VILEBREQUIN 4	1
25	REC682-11681-00	682-11681-00	PIN	PIN	SPINOTTO	PIN	2
26	REC90209-20159	90209-20M23	ARANDELA	WASHER	RONDELLA	RONDELLE	4
27	REC650-11651-04	650-11651-00	BIELA	CONNECTING ROD	BIELLA	BIELLE	2
28	REC93310-620V5	93310-620V5	COJINETE DE BIELA	BEARING, CONNECTING ROD	CUSCINETTO BIELLA	PALIER DE BIELLE	2
29	REC63V-11515-02	63V-11515-02	ARILLO	SEAL LABYRINTH	GUARNIZIONE	JOINT	1
30	REC93440-52009	93440-52008	CLIP	CLIP	CLIP	CLIP	1
31	REC90201-14377	9020-14377	ARANDELA	WASHER	RONDELLA	RONDELLE	4
32	REC93602-14104	93602-14104	AGUJAS DE RODAMIENTO	PIN DOWEL	SPILLO CUSCINETTO	AIGUILLE DE PALIER	50
33	REC93450-15023	93450-15023	CIRCLIP	CIRCLIP	CIRCLIP	CIRCLIP	4
34	REC634-11633-00	634-11633-00	PIN, PISTÓN	PIN, PISTON	SPINOTTO PISTONE	AXE DE PISTON	2
	REC682-11610-01	682-11610-01	KIT SEGMENTOS DE PISTÓN STD	PISTON RING SET STD	KIT FASCE STD	KIT SEGMENTS STD	2
35	REC682-11610-11	682-11610-11	KIT SEGMENTOS DE PISTÓN 0.25mm O/S	PISTON RING SET 0.25mm O/S	KIT FASCE 0.25mm O/S	KIT SEGMENTS 0.25mm O/S	2
	REC682-11610-21	682-11610-21	KIT SEGMENTOS DE PISTÓN 0.50mm O/S	PISTON RING SET 0.50mm O/S	KIT FASCE 0.50mm O/S	KIT SEGMENTS 0.50mm O/S	2
	REC6E7-11631-00K	6E7-11631-00-97	PISTÓN STD	PISTON STD	PISTONE STD	PISTON STD	2
36	REC6E7-11635-00K	6E7-11635-00	PISTÓN 0.25mm O/S	PISTON 0.25mm O/S	PISTONE 0.25mm O/S	PISTON 0.25mm O/S	2
	REC6E7-11636-00K	6E7-11636-00	PISTÓN 0.50mm O/S	PISTON 0.50mm O/S	PISTONE 0.50mm O/S	PISTON 0.50mm O/S	2
37	REC90201-46M29	90201-46M29	ARANDELA	WASHER	RONDELLA	RONDELLE	1
38	REC93210-46M16	93210-46M16	TÓRICA	O-RING	O-RING	JOINT TORIQUE	1
39	REC93102-25M48	93102-25M48	RETÉN DE ACEITE	OIL SEAL	PARAOLIO	JOINT D'HUILE	1
40	REC93101-25018	93101-250-18	RETÉN DE ACEITE	OIL SEAL	PARAOLIO	JOINT D'HUILE	1
41	REC93101-13018	93101-13018	RETÉN DE ACEITE	OIL SEAL	PARAOLIO	JOINT D'HUILE	2
42	REC63V-15396-01-CA	63V-15396-01-CA	CUERPO DEL RETÉN	SHELL, OIL SEAL	GUARNIZIONE CORPO	LOGEMENT JOINT SPI	1
43	PAGB/T97.1-8	92995-06600	ARANDELA	WASHER	RONDELLA	RONDELLE	1
44	PAGB/T5783-M6X16	97095-06016	TORNILLO	BOLT	VITE	VIS	1
45	REC63V-45113-A1	63V-45113-A1	JUNTA BASE MOTOR	GASKET ENGINE	GUARNIZIONE BASE MOTORE	JOINT DE TETE MOTRICE	1

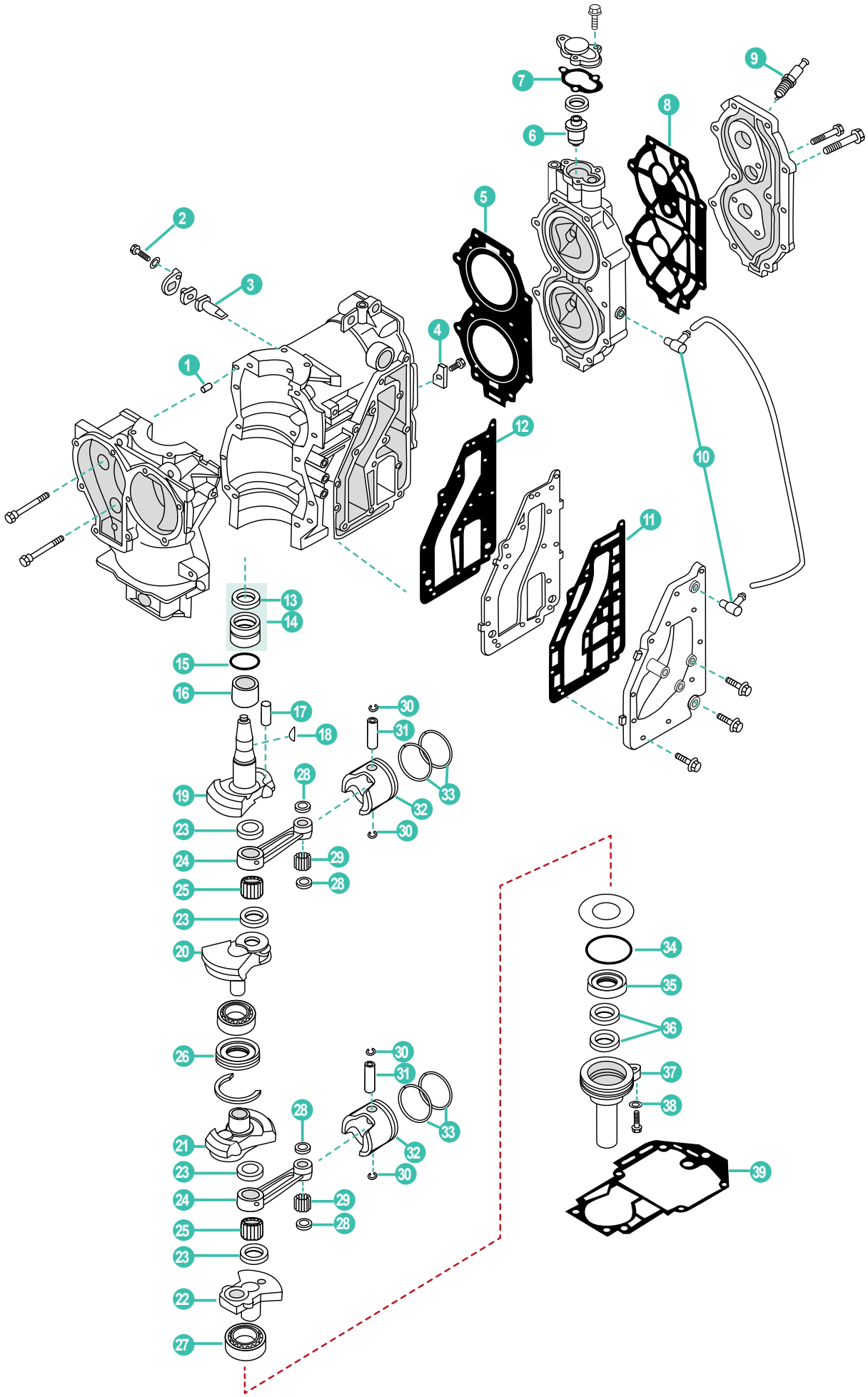
1
2
3
4
5
6
7
8
9
10
11
12
13
14
15
16
17
18
19
20
21
22
23
24
25
26
27
28
29
30
31
32
33
34
35
36
37
38
39

	REF	OEM					UN.
1	REC93606-12019	93606-12019	PIN CENTRADOR	HOLLOW PIN	SPINOTTO DI CENTRAGGIO	PIN DE CENTRAGE	2
2	PAGB/T5783-M5X12	97013-06016	TORNILLO	BOLT	VITE	VIS	1
3	TEN01150	6J8-11325-00	ÁNODO DE ZINC	ZINC ANODE	ANODO DI ZINCO	ANODE ZINC	1
4	TEN01121	689-11325-00	ÁNODO DE ZINC	ZINC ANODE	ANODO DI ZINCO	ANODE ZINC	1
5	REC61N-11181-00	61N-11181-A1	JUNTA CULATA	GASKET, CYLINDER HEAD	GUARNIZIONE TESTATA	JOINT DE CULASSE	1
6	REC6E5-12411-02	6E5-12411-01	TERMOSTATO	THERMOSTAT	TERMOSTATO	THERMOSTAT	1
7	REC655-12414-A1	655-12414-A1	JUNTA TAPA TERMOSTATO	GASKET, THERMOSTAT COVER	GUARNIZIONE COPERCHIO TERMOSTATO	JOINT COUVERCLE DE THERMOSTAT	1
8	REC61T-11193-A0	61T-11193-A1	JUNTA TAPA DE CULATA	GASKET, CYLINDER HEAD COVER	GUARNIZIONE COPERCHIO TESTATA	JOINT COUVERCLE DE CULASSE	1
9	NGKBR7HS-10	94702-00271	BUJÍA	SPARK PLUG	CANDELA	BOUGIE	2
	NGKB7HS-10	94702-00217	BUJÍA	SPARK PLUG	CANDELA	BOUGIE	2
10	PAF15-04000005	676-11372-00	NIPLE DE MANGUERA	NIPPLE	TUBO	RACCORD D'EAU	2
11	REC6K8-41124-A1	6K8-41124-A1	JUNTA EXTERIOR, TAPA DE ESCAPE	GASKET, EXHAUST OUTER COVER	GUARNIZIONE ESTERIORE, COPERCHIO SCARICO	JOINT DE COUVERCLE EXT ECHAPPEMENT	1
12	REC6K8-41122-A1	6K8-41122-A1	JUNTA DE ESCAPE	EXHAUST GASKET	GUARNIZIONE DI SCARICO	JOINT D'ECHAPPEMENT	1
13	REC93102-32M07	93102-32M07	RETÉN DE ACEITE	OIL SEAL	PARAOLIO	JOINT SPI	1
14	REC93399-99951	93399-99951	RODAMIENTO	BEARING	CUSCINETTO	ROULEMENT À BILLE	1
15	REC93210-46M16	93210-46M16	TÓRICA	O-RING	O-RING	JOINT TORIQUE	1
16	REC90387-32002	90387-32002	COLLAR	COLLAR	COLLARE	COLLIER	1
17	REC689-11681-00	689-11681-01	PIN	PIN	SPINOTTO	PIN	2
18	REC90280-05049	90280-05049	CHAVETA	KEY WOODRUFF	CHIAVETTA	CLAVETTE	1
19	REC6G0-11412-00	69P-11412-00	CIGÜEÑAL 1	CRANK 1	ALBERO MOTORE 1	VILEBREQUIN 1	1
20	REC6G0-11422-00	69P-11422-00	CIGÜEÑAL 2	CRANK 2	ALBERO MOTORE 2	VILEBREQUIN 2	1
21	REC6G0-11432-00	69P-11432-00	CIGÜEÑAL 3	CRANK 3	ALBERO MOTORE 3	VILEBREQUIN 3	1
22	REC6G0-11442-00	69P-11442-00	CIGÜEÑAL 4	CRANK 4	ALBERO MOTORE 4	VILEBREQUIN 4	1
23	REC90209-24M03	90209-24M03	ARANDELA	WASHER	RONDELLA	RONDELLE	4
24	REC689-11651-00	689-11651-00	BIELA	ROD CONNECTING	BIELLA	BIELLE	2
25	REC93310-624U5	93310-62406	COJINETE DE BIELA	BEARING, CONNECTING ROD	CUSCINETTO BIELLA	PALIER DE BIELLE	2
26	REC61N-11515-00	61N-11515-00	ARO	SEAL, LABYRINTH	O-RING	JOINT	1
27	REC93306-305U3	93306-305U3	RODAMIENTO	BEARING	CUSCINETTO	PALIER	1
28	REC90201-20M27	90201-20M27	ARANDELA PLANA	WASHER, PLATE	RONDELLA PIANA	RONDELLE	4
29	REC93602-20M02	93602-20M02	AGUJA PASADOR	NEEDLE PIN	SPILLO	AIGUILLE	68
	REC93602-18M12	93602-18M12	AGUJAS PASADOR 25N/M & 20D/M	NEEDLE PIN 25N/M & 20D/M	SPILLO 25N/M & 20D/M	AIGUILLE 25N/M & 20D/M	
30	REC688-11634-00	688-11634-00	CIRCLIP	CIRCLIP	CIRCLIP	CIRCLIP	4
31	REC689-11633-00	689-11633-00	PIN, PISTÓN	PIN, PISTON	SPINOTTO PISTONE	AXE DE PISTON	2
	REC61N-11631-00K	61N-11631-00-95	PISTÓN STD	PISTON STD	PISTONE STD	PISTON STD	2
32	REC61N-11635-00K	61N-11635-00	PISTÓN 0.25mm O/S	PISTON 0.25mm O/S	PISTONE 0.25mm O/S	PISTON 0.25mm O/S	2
	REC61N-11636-00K	61N-1163-00	PISTÓN 0.50mm O/S	PISTON 0.50mm O/S	PISTONE 0.50mm O/S	PISTON 0.50mm O/S	2
	REC61N-11603-00	61N-11603-00	KIT SEGMENTOS DE PISTÓN STD	PISTON RING SET STD	KIT FASCE STD	KIT SEGMENTS STD	2
33	REC61N-11604-00	61N-11604-00	KIT SEGMENTOS DE PISTÓN 0.25mm O/S	PISTON RING SET 0.25mm O/S	KIT FASCE 0.25mm O/S	KIT SEGMENTS 0.25mm O/S	2
	REC61N-11605-00	61N-11605-00	KIT SEGMENTOS DE PISTÓN 0.50mm O/S	PISTON RING SET 0.50mm O/S	KIT FASCE 0.50mm O/S	KIT SEGMENTS 0.50mm O/S	2
34	REC93210-58M21	93210-58M21	TÓRICA	O-RING	O-RING	JOINT TORIQUE	1
35	REC93102-25008	93102-25008	RETÉN DE ACEITE	OIL SEAL	PARAOLIO	JOINT SPI	1
36	REC93101-16001	93101-16001	RETÉN DE ACEITE	OIL SEAL	PARAOLIO	JOINT SPI	2
37	REC689-15396-01-CA	689-15396-01-5B	CUERPO DEL RETÉN	SHELL, OIL SEAL	GUARNIZIONE CORPO	LOGEMENT JOINT SPI	1
38	PAGB/T97.1-8	92995-06600	ARANDELA	WASHER	RONDELLA	RONDELLE	1
39	REC61T-45113-A0	689-45113-A1	JUNTA BASE MOTOR	GASKET ENGINE	GUARNIZIONE BASE MOTORE	JOINT DE TETE MOTRICE	1



REC2TU3
REC2TU6

P. 38



REF	OEM
REC61N-W0093-00	61N-W0093-00

P. 96

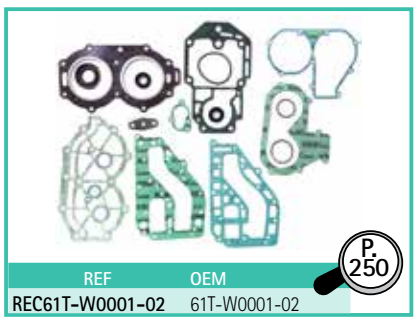

REF	OEM
REC61T-W0001-02	61T-W0001-02

P. 250

2T STROKES 25HP J/JEO/ESH • 30HP D/DEO/DETO • 30ELH/ELA • 30DMHO/DMSH • 30ERZ/DEL • 30MLH (1986-13)

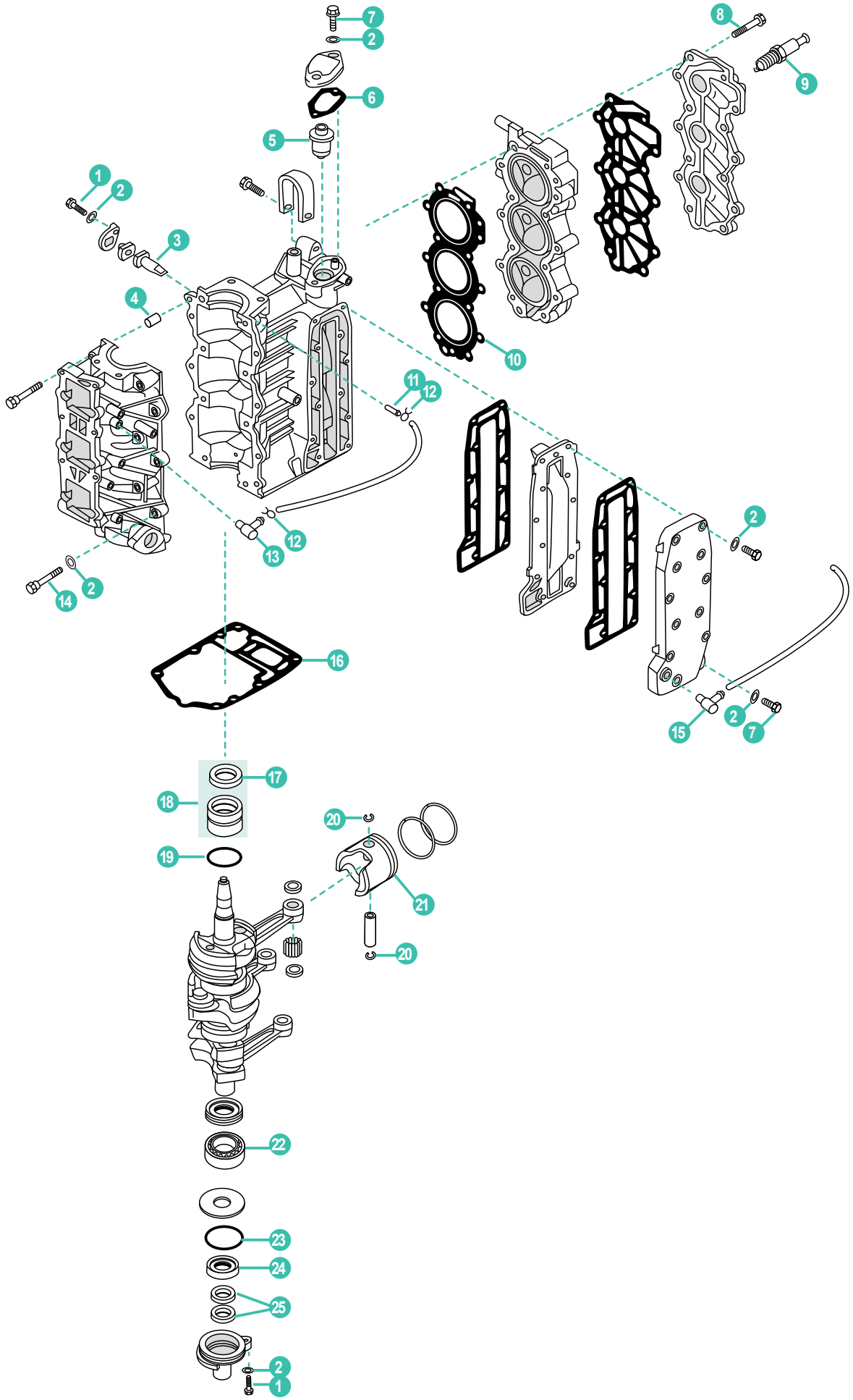

	REF	OEM					UN.
1	PAGB/T5783-M6X16	97095-06016	PERNO	STUD	BULLONE	BOULON	4
2	PAGB/T97.1-6	92990-06600	ARANDELA PLANA	FLAT WASHER	RONDELLA PIANA	RONDELLE PLANE	24
3	TEN01150	6J8-11325-00	ÁNODO	ANODE	ANODO	ANODE	2
4	REC93606-12019	93606-12019	PIN CENTRADOR	HOLLOW PIN	SPINOTTO DI CENTRAGGIO	PIN DE CENTRAGE	2
5	REC6E5-12411-02	6E5-12411-01	TERMOSTATO	THERMOSTAT	TERMOSTATO	THERMOSTAT	1
6	REC61A-12414-A0	61A-12414-A0	JUNTA TAPA TERMOSTATO	GASKET, THERMOSTAT COVER	GUARNIZIONE COPERCHIO TERMOSTATO	JOINT COUVERCLE DE THERMOSTAT	1
7	PAGB/T5782-M6X25	97095-06025	PERNO	BOLT	PERNO	BOULON	3
8	REC90119-08M21	90119-08M21	TORNILLO CON ARANDELA	BOLT, FLANGE	VITE CON RONDELLA	VIS DE BRIDE	14
9	NGKBR7HS-10	94702-00271	BUJÍA	SPARK PLUG	CANDELA	BOUGIE	3
10	REC6J8-11181-A2	6J8-11181-A1	JUNTA CULATA	GASKET, CYLINDER HEAD	GUARNIZIONE TESTATA	JOINT DE CULASSE	1
11	REC624-14485-00	624-14485-00	PIPA DE AGUA	PIPE, WATER	TUBO	RACCORD TUYAU D'EAU	1
12	PAHT-2.5X60	90467-06016	PRESILLA	CLAMP	CLIP	COLLIER	2
13	REC650-11370-00	650-11370-00	NIPLE DE MANGUERA	NIPPLE	TUBO	RACCORD D'EAU	1
14	PAGB/T5783-M6X30	970-95-06030	PERNO	BOLT	PERNO	BOULON	6
15	PAF15-04000005	676-11372-00	NIPLE DE MANGUERA	NIPPLE	TUBO	RACCORD D'EAU	1
16	REC6J8-45113-00	6J8-45113-A0	JUNTA BASE MOTOR	GASKET ENGINE	GUARNIZIONE BASE MOTORE	JOINT DE TETE MOTRICE	1
17	REC93102-26M27	93102-26M27	RETÉN DE ACEITE	OIL SEAL	PARAOLIO	JOINT SPI	1
18	REC93311-632U7	93311-632U7	COJINETE DE RODILLOS	BEARING CYL	CUSCINETTO CILINDRO	ROULEMENT	1
19	REC93210-42159	93210-42159	TÓRICA	O-RING	O-RING	JOINT TORIQUE	1
20	PAF25-05020106	93450-17129	CIRCLIP	CIRCLIP	CIRCLIP	CIRCLIP	6
21	REC6J8-11631-02	6J8-11631-02-97	PISTÓN STD	PISTO STD	PISTONE STD	PISTON STD	3
22	REC93306-305U3	93306-305U3	RODAMIENTO	BALL BEARING	CUSCINETTO	ROULEMENT À BILLE	
23	PAF15-06080003	93210-56M80	TÓRICA	O-RING	O-RING	JOINT TORIQUE	1
24	REC93101-25M35	93101-25M28	RETÉN DE ACEITE	OIL SEAL	PARAOLIO	JOINT SPI	1
25	REC93104-16M01	93104-16M04	RETÉN DE ACEITE	OIL SEAL	PARAOLIO	JOINT SPI	2



REC2TU3
REC2TU6

P. 38

E40X • 40XMH • E40XMH/XW/XWT

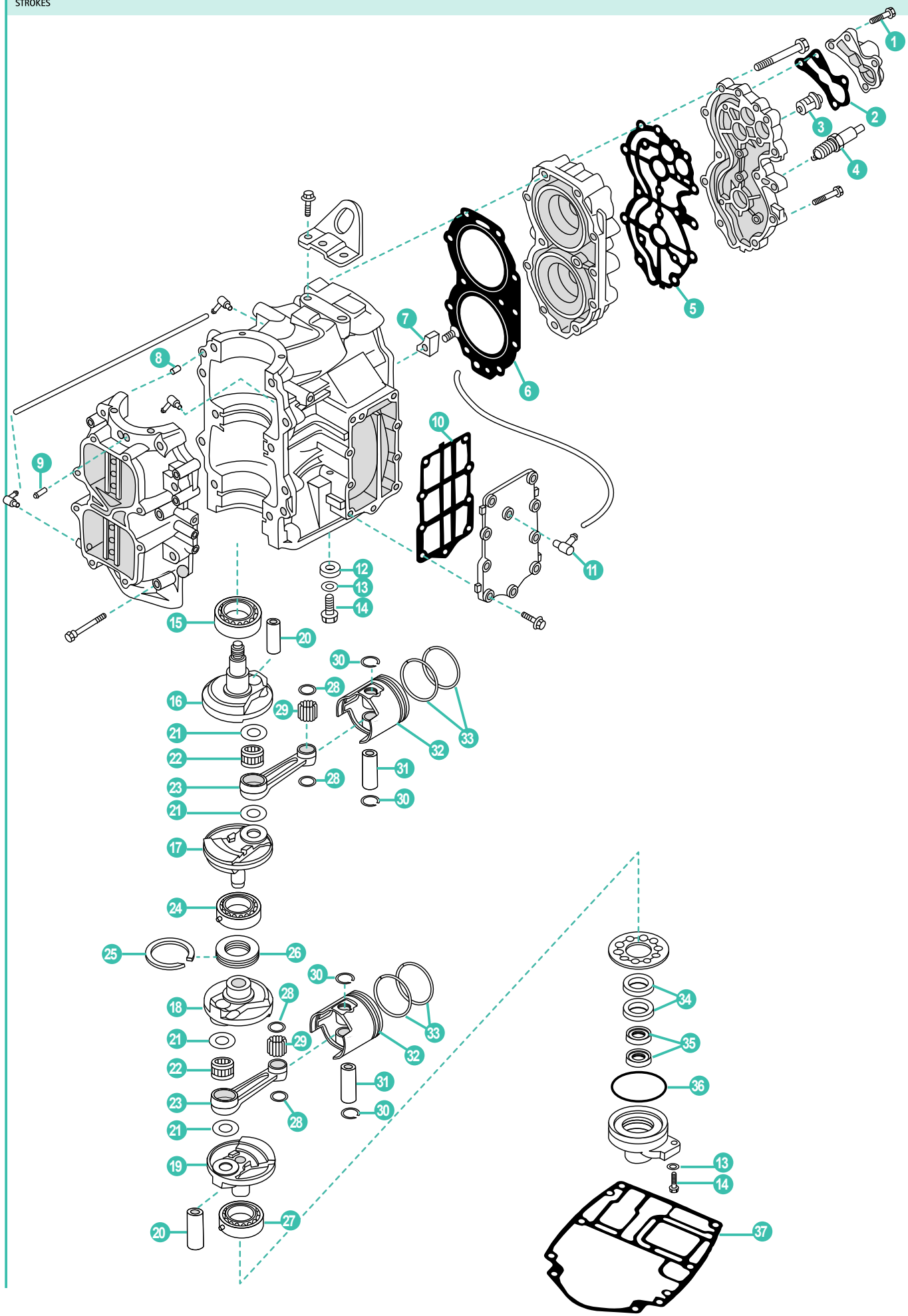

	REF	OEM					UN.
1	PAGB/T5782-M6X35	90119-06MA5	TORNILLO	BOLT WITH WASHER	VITE	VIS	4
2	REC676-12414-A0	676-12414-A0	JUNTA TAPA TERMOSTATO	GASKET, THERMOSTAT COVER	GUARNIZIONE COPERCHIO TERMOSTATO	JOINT COUVERCLE DE THERMOSTAT	1
3	REC6E5-12411-02	6E5-12411-01	TERMOSTATO	THERMOSTAT	TERMOSATO	THERMOSTAT	1
4	NGKBR7HS	B7H-S0000-00-00	BUJÍA	SPARK PLUG	CANDELA	BOUGIE	2
5	REC66T-11193-A0	66T-11193-A0	JUNTA DE CULATÍN	HEAD VOER GASKET	GUARNIZIONE TESTATA	JOIN DE COUVRE CULASSE	1
6	REC66T-11181-00	66T-11181-A2	JUNTA CULATA	GASKET, CYLINDER HEAD	GUARNIZIONE TESTATA	JOINT DE CULASSE	1
7	TEN01166	676-11325-00	ÁNODO	ANODE	ANODO	ANODE	1
8	PAF15-00000014	93608-12063	PIN CENTRADOR	HOLLOW PIN	SPINOTTO DI CENTRAGGIO	PIN DE CENTRAGE	2
9	REC624-14485-00	624-14485-00	PIPA DE AGUA	PIPE, WATER	TUBO	RACCORD TUYAU D'EAU	1
10	REC66T-41114-A0	667-41114-A0	JUNTA TAPA	GASKET, COVER	GAURNIZIONE COPERCHIO	JOINT COUVERCLE	1
11	PAF15-04000005	676-11372-00	NIPLE DE MANGUERA	NIPPLE	TUBO	RACCORD D'EAU	1
12	TEN01127	676-45251-00	ÁNODO	ANODE	ANODO	ANODE	1
13	PAGB/T97.1-8	92995-06600	ARANDELA	WASHER	RONDELLA	RONDELLE	2
14	PAGB/T5783-M6X20	97095-06020	TORNILLO	BOLT	VITE	VIS	2
15	REC93306-307U0	93306-307U0	RODAMIENTO	BEARING	CUSCINETTO	ROULEMENT À BILLE	1
16	REC66T-11412-00	66T-11412-00	CIGÜEÑAL 1	CRANK 1	ALBERO MOTORE 1	VILEBREQUIN 1	1
17	REC66T-11422-00	66T-11422-00	CIGÜEÑAL 2	CRANK 2	ALBERO MOTORE 2	VILEBREQUIN 2	1
18	REC66T-11432-00	66T-11432-00	CIGÜEÑAL 3	CRANK 3	ALBERO MOTORE 3	VILEBREQUIN 3	1
19	REC66T-11442-00	66T-11442-00	CIGÜEÑAL 4	CRANK 4	ALBERO MOTORE 4	VILEBREQUIN 4	1
20	REC66T-11681-00	66T-11681-00	PIN	PIN	SPINOTTO	PIN D'ENTRAINEMENT	2
21	REC90209-27M07	90209-27M07	ARANDELA	WASHER	RONDELLA	RONDELLE	4
22	REC93310-727U0	93310-727U0	RODAMIENTO	BEARING	CUSCINETTO	ROULEMENT	2
23	REC6F5-11651-00	6F5-11651-00	BIELA	ROD CONNECTING	BIELLA	BIELLE	2
24	REC93332-000UE	93332-000UE	RODAMIENTO	BEARING	CUSCINETTO	ROULEMENT À BILLE	1
25	REC93440-68M03	93440-68M03	CIRCLIP	CIRCLIP	CIRCLIP	CIRCLIP	1
26	REC6F5-11515-00	6F5-11515-00	ARILLO	SEAL, LABERYNTH	GUARNIZIONE TONDA	JOINT	1
27	REC93306-306V5	9306-306V5	RODAMIENTO	BEARING	CUSCINETTO	ROULEMENT	1
28	REC90201-20417	90201-20417	ARANDELA	WASHER PLATE	RONDELLA	RONDELLE	4
29	REC93603-21111	93603-21111	AGUJAS DE RODAMIENTO	PIN, DOWEL	SPINOTTO CENTRAGGIO	AIGUILLE	56
30	REC663-11634-00	633-11634-00	JUNTA	CLIP	GUARNIZIONE	JOINT	4
31	REC6F5-11633-00	6F5-11633-00	PIN, PISTÓN	PIN, PISTON	SPINOTTO PISTONE	AXE DE PISTON	2
	REC66T-11631-01K	66T-11631-01-93	PISTÓN STD	PISTON STD	PISTONE STD	PISTON STD	2
32	REC66T-11635-01K	66T-11635-01	PISTÓN 0.25mm O/S	PISTON 0.25mm O/S	PISTONE 0.25mm O/S	PISTON 0.25mm O/S	2
	REC66T-11636-01K	66T-11636-01	PISTÓN 0.50mm O/S	PISTON 0.50mm O/S	PISTONE 0.50mm O/S	PISTON 0.50mm O/S	2
	REC66T-11603-00	66T-11603-00	KIT SEGMENTOS DE PISTÓN STD	PISTON RING SET STD	KIT FASCE STD	KIT SEGMENTS STD	2
33	REC66T-11604-00	66T-11604-00	KIT SEGMENTOS DE PISTÓN 0.25mm O/S	PISTON RING SET 0.25mm O/S	KIT FASCE 0.25mm O/S	KIT SEGMENTS 0.25mm O/S	2
	REC66T-11605-00	66T-11605-00	KIT SEGMENTOS DE PISTÓN 0.50mm O/S	PISTON RING SET 0.50mm O/S	KIT FASCE 0.50mm O/S	KIT SEGMENTS 0.50mm O/S	2
34	REC93102-30M56	93102-30M56	RETÉN DE ACEITE	OIL SEAL	PARAOLIO	JOINT SPI	2
35	REC93101-16001	93101-16001	RETÉN DE ACEITE	OIL SEAL	PARAOLIO	JOINT SPI	2
36	REC93210-65M50	93210-65M50	TÓRICA	O-RING	O-RING	JOINT TORIQUE	1
37	REC66T-45113-A0	66T-45113-A00	JUNTA BASE MOTOR	GASKET ENGINE	GUARNIZIONE BASE MOTORE	JOINT DE TETE MOTRICE	1



REC2TU3
REC2TU6
P. 38


P. 96

REF	OEM
REC66T-W0093-01	66T-W0093-01

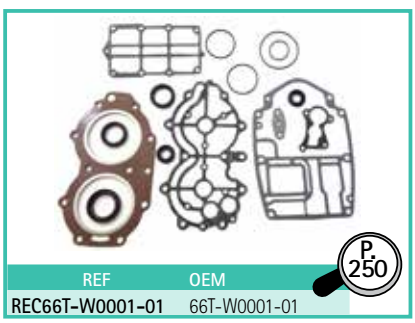
P. 250

REF	OEM
REC66T-W0001-01	66T-W0001-01

2T STROKES E40GMH/S/L • E40JMH • E40JWH • 40GWH • 40JWH

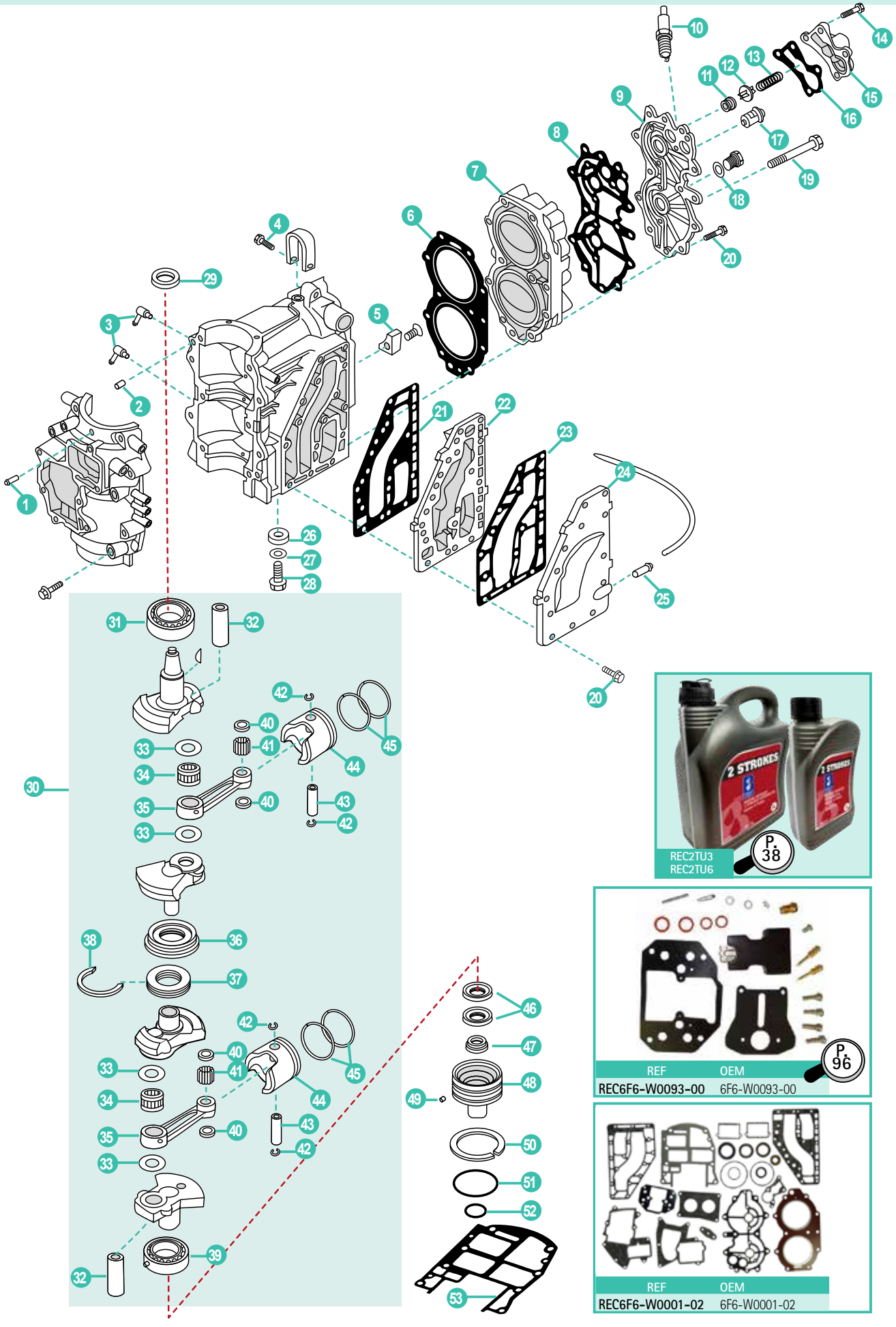

	REF	OEM					UN.
1	PAT15-04010202	624-14485-00	PIPA DE AGUA	PIPE, WATER	TUBO	RACCORD TUYAU D'EAU	1
2	PAF25-00000014	93608-12063	PIN CENTRADOR	HOLLOW PIN	SPINOTTO DI CENTRAGGIO	PIN DE CENTRAGE	2
3	REC650-11370-00	650-11370-01	NIPLE DE MANGUERA	NIPPLE	TUBO	RACCORD D'EAU	2
4	PAGB/T5783-M8X35	90101-08001	TORNILLO	BOLT	VITE	VIS	1
5	TEN01166	676-11325-00	ÁNODO	ANODO	ANODO	ANODE	1
6	REC6F5-11181-A2	6F5-11181-A1	JUNTA CULATA	GASKET, CYLINDER HEAD	GUARNIZIONE TESTATA	JOINT DE CULASSE	1
7	REC6F6-11111-00-1S	6F6-11111-00-1S	CULATA DE CILINDRO	CYLINDER HEAD	TESTA CILINDRO	CULASSE	1
8	REC6F6-11193-A1	6F6-11193-A1	JUNTA TAPA	GASKET, COVER	GUARNIZIONE COPERCHIO	JOINT DE COUVRE CULASSE	1
9	REC6F6-11191-00-1S	6F6-11191-00-1S	TAPA CULATA DE CILINDRO	HEAD CYLINDER COVER	COPERCHIO TESTATA CILINDRO	CUVERCLE DE CULASSE	1
10	NGKB7HS	94702-00040	BUJÍA	SPARK PLUG	CANDELA	BOUGIE	2
11	REC90480-18065	90480-18065	TAPÓN	PLUG	TAPPO	BOUCHON	1
12	REC663-12416-00	663-12416-00	VÁLVULA DE PRESIÓN	VALVE, PRESS CONTROL	VALVOLA DI PRESSIONE	SOUPAPE DE PRESSION	1
13	REC90501-14M02	90501-14M02	RESORTE DE COMPRESIÓN	SPRING COMPRESSION	MOLLA DI COMPRESSIONE	RESSORT	1
14	PAGB/T5783-M6X30	90119-06MA4	TORNILLO CON ARANDELA	BOLT, FLANGE	VITE CON RONDELLA	VIS DE BRIDE	4
15	REC6E9-12413-00-1S	6E9-12413-00-1S	TAPA TERMOSTATO	COVER, THERMOSTAT	COPERCHIO TERMOSTATO	COUVERCLE THERMOSTAT	1
16	REC6E9-12414-A1	6E9-12414-A1	JUNTA TAPA TERMOSTATO	GASKET, THERMOSTAT COVER	GUARNIZIONE COPERCHIO TERMOSTATO	JOINT COUVERCLE DE THERMOSTAT	1
17	REC6F5-12411-03	6F5-12411-02	TERMOSTATO	THERMOSTAT	TERMOSTATO	THERMOSTAT	1
18	PAF15-04000003	90430-14115	JUNTA	GASKET	GUARNIZIONE	JOINT	1
19	PAGB/T5783-M6X25	90119-08MA5	TORNILLO	BOLT	VITE	VIS	11
20	PAGB/T5783-M6X25	90119-06MA3	TORNILLO CON ARANDELA	BOLT, FLANGE	VITE CON RONDELLA	VIS DE BRIDE	20
21	REC6F5-41112-A0	6F5-41112-A0	JUNTA DE ESCAPE	EXHAUST GASKET	GUARNIZIONE DI SCARICO	JOINT D'ECHAPPEMENT	1
22	REC6F5-41111-01-1S	6F5-41111-01-1S	CUBIERTA INTERIOR DE ESCAPE	INNER EXHAUST COVER	COPERCHIO INTERIORE SCARICO	COUVERCLE INTERIEUR D'ECHAPPEMENT	1
23	REC6F5-41114-A0	6F5-41114-A0	JUNTA EXTERIOR, TAPA DE ESCAPE	GASKET, EXHAUST OUTER COVER	GUARNIZIONE ESTERIORE, COPERCHIO SCARICO	JOINT DE COUVERCLE EXT ECHAPPEMENT	1
24	REC6F5-41113-A0-1S	6F5-41113-01-1S	CUBIERTA EXTERIOR DE ESCAPE	OUTTER EXHAUST COVER	COPERCHIO ESTERNO SCARICO	COUVERCLE EXTERIEUR D'ECHAPPEMENT	1
25	PAF4-04010102	650-24378-00	PIPA DE AGUA	PIPE, WATER	TUBO	RACCORD TUYAU D'EAU	1
26	TEN01127	676-45251-00	ÁNODO	ANODE	ANODO	ANODE	1
27	PAGB/T97.1-6	92995-06600	ARANDELA	WASHER	RONDELLA	RONDELLE	1
28	PAGB/T5783-M6X16	97095-06016	PERNO	BOLT	PERNO	BOULON	1
29	REC93102-35M18	93102-35M18	RETÉN DE ACEITE	OIL SEAL	PARAOLIO	JOINT SPI	1
30	REC6F6-11400-02	6F6-11400-01	CIGÜEÑAL COMPLETO	CRANK ASSY	ALBERO MOTORE COMPLETO	VILEBREQUIN COMPLET	1
31	REC93306-307U0	93306-307U0	RODAMIENTO	BALL BEARING	CUSCINETTO	ROULEMENT À BILLE	1
32	REC6F5-11681-00	6F5-11681-00	PIN	PIN	SPINOTTO	PIN D'ENTRAINEMENT	2
33	REC90209-27M07	90209-27M07	ARANDELA DE SEPARACIÓN	WASHER	RONDELLA DISTANZIALE	RONDELLE	14
34	REC93310-727V7	93310-727V7	COJINETE DE BIELA	BEARING, CONNECTING ROD	CUSCINETTO BIELLA	PALIER DE BIELLE	2
35	REC6F5-11651-00	6F5-11651-00	BIELA	ROD, CONNECTING	BIELLA	BIELLE	2
36	REC93332-000UE	93332-000UE	COJINETE	BEARING	CUSCINETTO	PALIER	1
37	REC6F5-11515-00	6F5-11515-00	SELLO LABERINTO	LABERINTH SEAL	GUARNIZIONE SIGILLATA	JOINT	1
38	REC93440-68M03	93440-68M03	CIRCLIP	CIRCLIP	CIRCLIP	CIRCLIP	1
39	REC93306-306V1	93306-303V1	COJINETE	BEARING	CUSCINETTO	PALIER	1
40	REC90201-20417	90201-20417	ARANDELA PLANA	FLAT WASHER	RONDELLA PIANA	RONDELLE	4
41	REC93603-21111	93603-21111	AGUJA PASADOR	NEEDLE PIN	SPILLO	CLAVETTE	56
42	REC663-11634-00	663-11634-00	CIRCLIP	CIRCLIP	CIRCLIP	CIRCLIP	4
43	REC6F5-11633-00	6F5-11633-00	PIN, PISTÓN	PIN, PISTON	SPINOTTO PISTONE	AXE DE PISTON	2
	REC6F6-11631-00K	6F6-11631-00-95	PISTÓN STD	PISTON STD	PISTONE STD	PISTON STD	2
44	REC6F6-11635-00K	6F6-11635-00	PISTÓN 0.25mm O/S	PISTON 0.25mm O/S	PISTONE 0.25mm O/S	PISTON 0.25mm O/S	2
	REC6F6-11636-00K	6F6-11636-00	PISTÓN 0.50mm O/S	PISTON 0.50mm O/S	PISTONE 0.50mm O/S	PISTON 0.50mm O/S	2
	REC6F5-11610-00	6F6-11610-00	KIT SEGMENTOS DE PISTÓN STD	PISTON RING SET STD	KIT FASCE STD	KIT SEGMENTS STD	2
45	REC6F5-11610-10	6F6-11610-010	KIT SEGMENTOS DE PISTÓN 0.25mm O/S	PISTON RING SET 0.25mm O/S	KIT FASCE 0.25mm O/S	KIT SEGMENTS 0.25mm O/S	2
	REC6F5-11610-20	6F6-11610-20	KIT SEGMENTOS DE PISTÓN 0.50mm O/S	PISTON RING SET 0.50mm O/S	KIT FASCE 0.50mm O/S	KIT SEGMENTS 0.50mmO/S	2
46	REC93101-30M33	93101-30M33	RETÉN DE ACEITE	OIL SEAL	PARAOLIO	JOINT SPI	2
47	REC93104-16M01	93104-16M01	RETÉN DE ACEITE	OIL SEAL	PARAOLIO	JOINT SPI	1
48	REC6F5-15396-01-5B	6F5-15396-01-5B	CUERPO DEL RETÉN	SHELL, OIL SEAL	GUARNIZIONE CORPO	LOGEMENT JOINT SPI	1
49	PAGB/T879.4-3X20	91690-30010	PASADOR DE RESORTE	PIN, SPRING	SPINOTO DI RITORNO	GOUPILLE FENDUE	1
50	REC93440-68M03	93440-68M03	CIRCLIP	CIRCLIP	CIRCLIP	CIRCLIP	1
51	REC93210-65M50	93210-65M50	TÓRICA	O-RING	O-RING	JOINT TORIQUE	1
52	REC93210-22M02	93210-22M02	TÓRICA	O-RING	O-RING	JOINT TORIQUE	1
53	REC6F5-45113-A0	6F5-45113-A0	JUNTA BASE MOTOR	GASKET ENGINE	GUARNIZIONE BASE MOTORE	JOINT DE TETE MOTRICE	1

2T STROKES 25Q/QEO · 40A/C • 40ELR • 40H/HE • 40MLHZ • 40O/OS • 40TLR • 40V/VE/VEO/VETO/VMHO • 40YETO/Z 50D/DE • 50H/HEDO/HETO/HMHD/HWHDLO/HRDO • 50MTO

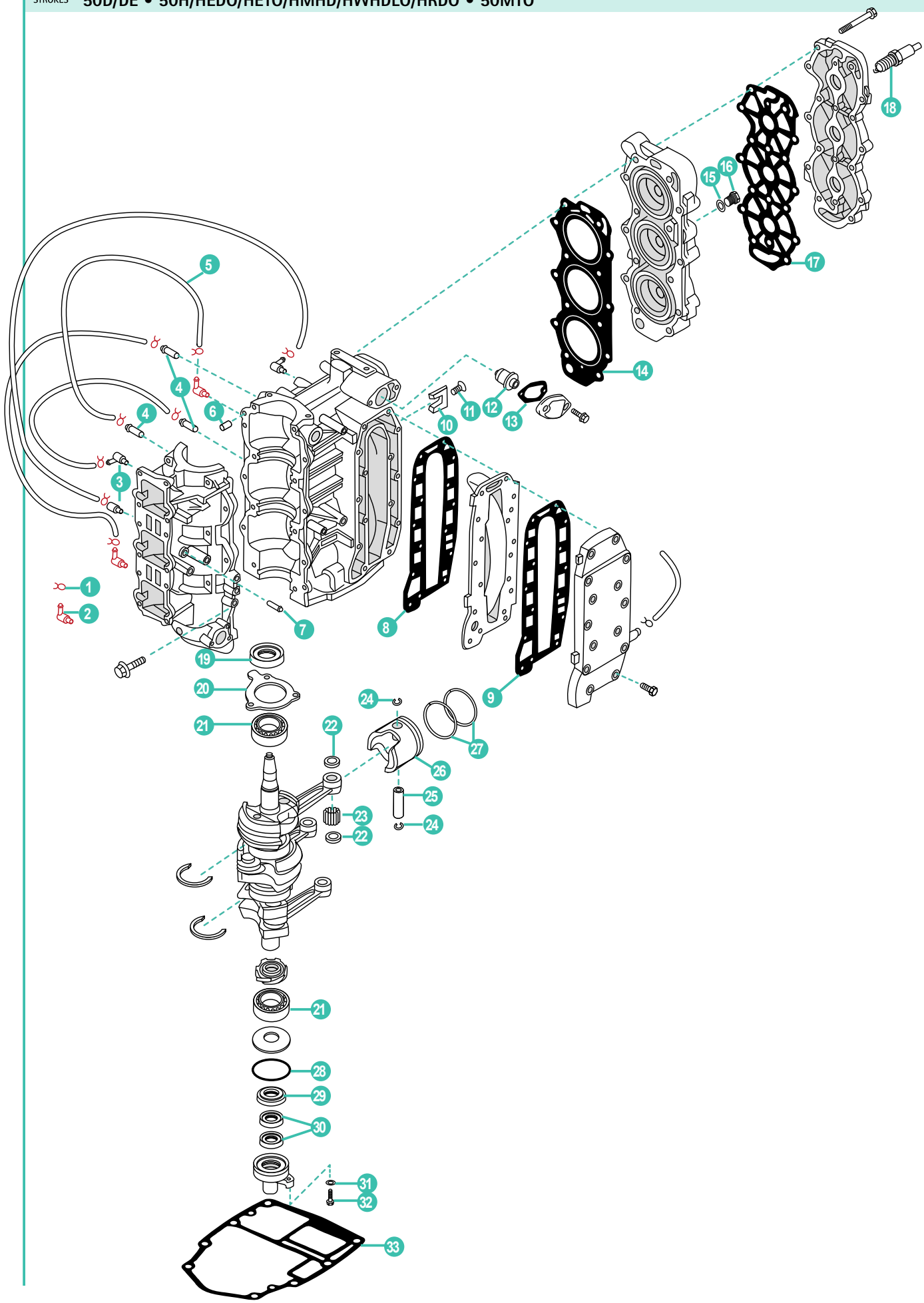

	REF	OEM					UN.
1	PAHT-2.5X60	90467-06016	CLIP	CLIP	CLIP	CLIP	8
2	REC688-11370-00	688-11370-01	NIPLE DE MANGUERA	NIPPLE	TUBO	RACCORD D'EAU	2
3	REC650-11370-00	650-11370-01	NIPLE DE MANGUERA	NIPPLE	TUBO	RACCORD D'EAU	2
4	REC624-14485-00	624-14485-00	PIPA DE AGUA	PIPE, WATER	TUBO	RACCORD TUYAU D'EAU	3
5	PAF2.6-04000015	90445-07MA3	TUBO L200	HOSE L200	TUBO L200	TUYAU L200	1
6	REC93606-12019	93606-12019	PIN CENTRADOR	HOLLOW PIN	SPINOTTO DI CENTRAGGIO	PIN DE CENTRAGE	2
7	PAF4-04010102	650-24378-00	PIPA DE AGUA	PIPE, WATER	TUBO	RACCORD TUYAU D'EAU	1
8	REC6H4-41112-A0	6H4-41112-A0	JUNTA DE ESCAPE	EXHAUST GASKET	GUARNIZIONE DI SCARICO	JOINT D'ECHAPPEMENT	1
9	REC6H4-41114-A0	6H4-41114-A0	JUNTA EXTERIOR, TAPA DE ESCAPE	GASKET, EXHAUST OUTER COVER	GUARNIZIONE ESTERIORE, COPERCHIO SCARICO	JOINT DE COUVERCLE EXT ECHAPPEMENT	1
10	TEN01147	688-11325-00	ÁNODO	ANODE	ANODO	ANODE	2
11	PAGB/T820-M4X12	98780-04016	TORNILLO	SCREW	VITE	VIS	2
12	REC6E5-12411-30	6E5-12411-30	TERMOSTATO	THERMOSTAT	TERMOSTATO	THERMOSTAT	1
13	REC61A-12414-A0	6J8-12414-A0	JUNTA TAPA TERMOSTATO	GASKET, THERMOSTAT COVER	GUARNIZIONE COPERCHIO TERMOSTATO	JOINT COUVERCLE DE THERMOSTAT	1
14	REC63D-11181-A1	63D-11181-A2	JUNTA CULATA	GASKET, CYLINDER HEAD	GUARNIZIONE TESTATA	JOINT DE CULASSE	1
15	PAF15-04000003	90430-14115	JUNTA	GASKET	GAURNIZIONE	JOINT	1
16	PAF15-04000002	90340-14M00	TAPÓN	PLUG	TAPPO	BOUCHON	1
17	REC63D-11193-A0	63D-11193-A0	JUNTA TAPA	GASKET, COVER	GUARNIZIONE COPERCHIO	JOINT COUVERCLE	1
18	NGKBR8HS-10	94702-00247	BUJÍA	SPARK PLUG	CANDELA	BOUGIE	3
	NGKBR7HS-10	94702-00271	BUJÍA	SPARK PLUG	CANDELA	BOUGIE	3
19	REC93102-23096	93102-23096	RETÉN DE ACEITE	OIL SEAL	PARAOLIO	JOINT SPI	1
20	REC6H4-15369-A1	6H4-15369-A1	JUNTA DE CUERPO	GASKET, OIL SEAL HOUSING	GUARNIZIONE CORPO	JOINT	1
21	REC93306-305U8	93306-305-U8	RODAMIENTO	BEARING	CUSCINETTO	PALIER	2
22	REC6H4-11641-00	6H4-11641-00	ARANDELA	WASHER	RONDELLA	RONDELLE	6
23	REC93602-20M02	93602-20M02	AGUJA DE RODAMIENTO	BEARING NEEDLE	SPILLO DE CUSCINETTO	CLAVETTE DE PALIER	93
24	REC6H4-11634-01	6H4-11634-01	CIRCLIP	CIRCLIP	CIRCLIP	CIRCLIP	6
25	REC648-11633-00	648-11633-00	PIN, PISTÓN	PIN, PISTON	SPINOTTO PISTONE	AXE DE PISTON	3
	REC6H4-11631-01K	6H4-11631-01-95	PISTÓN STD	PISTON STD	PISTONE STD	PISTON STD	3
26	REC6H4-11635-01K	6H4-11635-01	PISTÓN 0.25mm O/S	PISTON 0.25mm O/S	PISTONE 0.25mm O/S	PISTON 0.25mm O/S	3
	REC6H4-11636-01K	6H4-11636-01	PISTÓN 0.50mm O/S	PISTON 0.50mm O/S	PISTONE 0.50mm O/S	PISTON 0.50mm O/S	3
27	REC63D-11603-00	63D-11603-00	KIT SEGMENTOS DE PISTÓN STD	PISTON RING SET STD	KIT FASCE STD	KIT SEGMENTS STD	3
	REC63D-11605-00	63D-11605-00	KIT SEGMENTOS DE PISTÓN 0.50mm O/S	PISTON RING SET 0.50mm O/S	KIT FASCE 0.50mm O/S	KIT SEGMENTS 0.50mm O/S	3
28	REC93210-58M21	93210-58M21	TÓRICA	O-RING	O-RING	JOINT TORIQUE	1
29	REC93102-25M28	93102-25M28	RETÉN DE ACEITE	OIL SEAL	PARAOLIO	JOINT SPI	1
30	REC93104-16M01	93104-16M01	RETÉN DE ACEITE	OIL SEAL	PARAOLIO	JOINT SPI	2
31	PAGB/T5783-M5X12	92995-06600	ARANDELA	WASHER	RONDELLA	RONDELLE	1
32	PAGB/T5783-M6X20	97095-06020	TORNILLO	BOLT	VITE	VIS	1
33	REC6H4-45113-00	6H4-45113-00	JUNTA BASE MOTOR	GASKET ENGINE	GUARNIZIONE BASE MOTORE	JOINT DE TETE MOTRICE	1

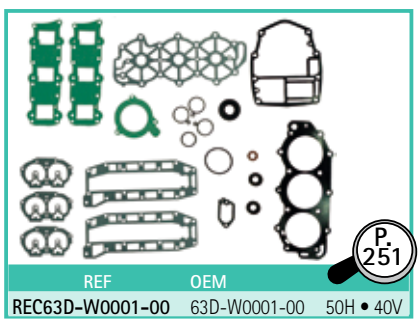
P. 251

REF	OEM	
REC63D-W0001-00	63D-W0001-00	50H • 40V

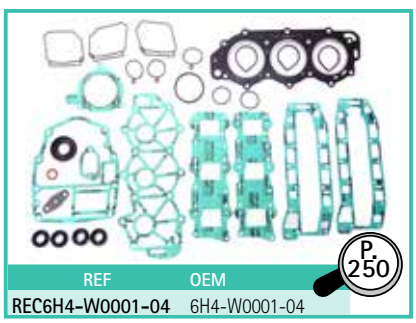
P. 250

REF	OEM
REC6H4-W0001-04	6H4-W0001-04

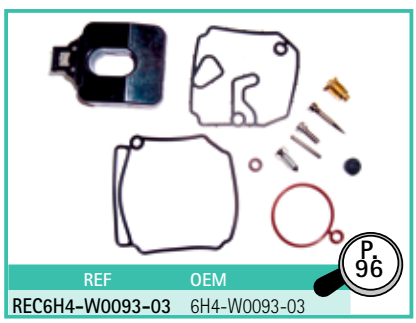
P. 96

REF	OEM
REC6H4-W0093-03	6H4-W0093-03

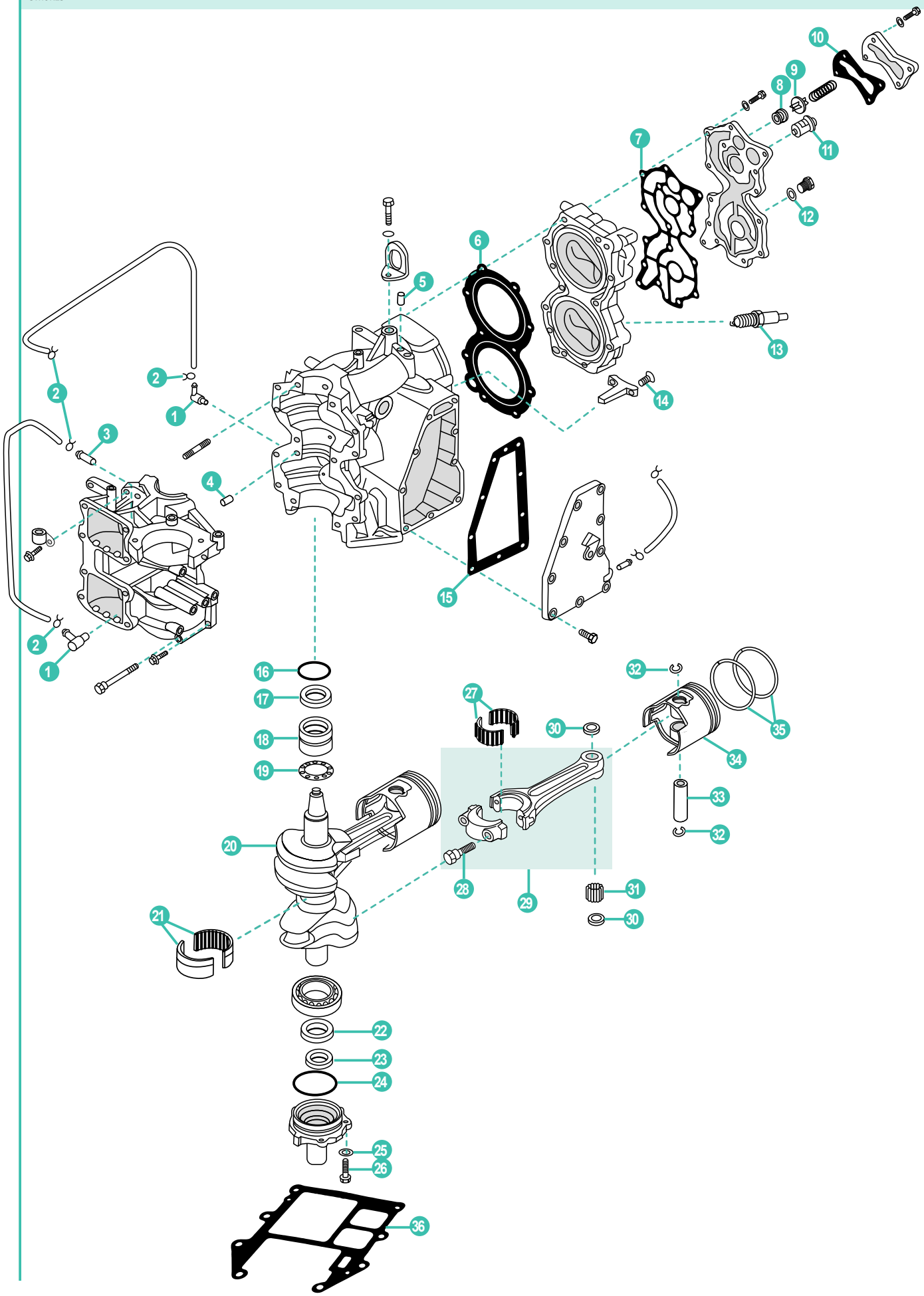
1
2
3
4
5
6
7
8
9
10
11
12
13
14
15
16
17
18
19
20
21
22
23
24
25
26
27
28
29
30
31
32
33
34
35
36

	REF	OEM					UN.
1	REC650-11370-00	650-11370-01	NIPLE DE MANGUERA	NIPPLE	TUBO	RACCORD D'EAU	2
2	PAHT-2.5X60	90467-06016	PRESILLA	CLIP	CLIP	CLIP	4
3	REC624-14485-00	624-14485-00	PIPA DE AGUA	PIPE, WATER	TUBO	RACCORD TUYAU D'EAU	1
4	PAF25-00000014	93608-12063	PIN CENTRADOR	HOLLOW PIN	SPINOTTO DI CENTRAGGIO	PIN DE CENTRAGE	1
5	PAF25-04000007	93604-08062	PIN CENTRADOR	HOLLOW PIN	SPINOTTO DI CENTRAGGIO	PIN DE CENTRAGE	1
6	REC697-11181-A1	697-11181-A2	JUNTA CULATA	GASKET, CYLINDER HEAD	GUARNIZIONE TESTATA	JOINT DE CULASSE	1
7	REC663-11193-00	663-11193-A0	JUNTA TAPA	GASKET, COVER	GUARNIZIONE COPERCHIO	JOINT DE COUVRE CULASSE	1
8	REC90480-18065	90480-18065	TAPÓN	GROMMET	TAPPO	BOUCHON	1
9	REC663-12416-00	663-12416-00	VÁLVULA DE PRESIÓN	VALVE, PRESSURE CONTROL	VALVOLA DI PRESSIONE	SOUPAPE DE PRESION	1
10	REC663-12414-00	663-12414-A0	JUNTA TAPA TERMOSTATO	GASKET, THERMOSTAT COVER	GUARNIZIONE COPERCHIO TERMOSTATO	JOINT COUVERCLE DE THERMOSTAT	1
11	REC6F5-12411-03	6F5-12411-02	TERMOSTATO	THERMOSTAT	TERMOSTATO	THERMOSTAT	1
12	PAF15-04000003	90430-14115	JUNTA	GASKET	GUARNIZIONE	JOINT	1
	NGKB8HS-10	94702-00160	BUJÍA 55E	SPARK PLUG 55E	CANDELA 55E	BOUGIE 55E	2
13	NGKB7HS	94702-00040	BUJÍA E48	SPARK PLUG E48	CANDELA E48	BOUGIE E48	2
	NGKB8HS	94702-00041	BUJÍA E55C	SPARK PLUG E55C	CANDELA E55C	BOUGIE E55C	2
14	PAGB/T820-M4X12	98780-04015	TORNILLO CABEZA PLANA	SCREW, FLAT HEAD	VITE TESTA PLANA	VIS	2
15	REC663-41114-00	663-41114-A0	JUNTA DE ESCAPE	EXHAUST GASKET	GUARNIZIONE DI SCARICO	JOINT D'ECHAPPEMENT	1
16	REC93210-42159	93210-42159	TÓRICA	O-RING	O-RING	JOINT TORIQUE	1
17	REC93102-32M07	93102-32M07	RETÉN DE ACEITE	OIL SEAL	PARAOLIO	JOINT SPI	1
18	REC93311-632U1	93311-632U1	COJINETE DE RODILLOS	BEARING	CUSCINETTO A RULLI	ROULEMENT À BILLE	1
19	REC663-11561-00	663-11561-00	ARANDELA PLANA	CHIM, RANK	SPESSORE		1
20	REC663-11411-00	663-11411-01	CIGÜEÑAL	CRANK SHAFT	ALBERO MOTORE	VILEBREQUIN	1
21	REC93311-832U4	93311-832U4	COJINETE DE RODILLOS	BEARING	CUSCINETTO A RULLI	ROULEMENT À BILLE	1
22	REC93102-28135	93102-28135	RETÉN DE ACEITE	OIL SEAL	PARAOLIO	JOINT SPI	1
23	REC93104-18049	93104-18049	RETÉN DE ACEITE	OIL SEAL	PARAOLIO	JOINT SPI	1
24	REC93210-62269	93210-62269	TÓRICA	O-RING	O-RING	JOINT TORIQUE	1
25	PAGB/T97.1-6	92995-06600	ARANDELA	WASHER	RONDELLA	RONDELLE	3
26	PAGB/T5783-M6X16	97095-06016	PERNO	BOLT	PERNO	BOULON	3
27	REC93310-730V8	93310-730V8	COJINETE DE RODILLOS	BEARING	CUSCINETTO A RULLI	ROULEMENT À BILLE	2
28	REC90109-08022	90109-08022	PERNO	BOLT	PERNO	BOULON	2
29	REC688-11650-03	688-11650-03	BIELA COMPLETA	CONNECTING ROD ASSY	BIELLA COMPLETA	BIELLE COMPLÈTE	2
30	REC90201-20417	90201-20417	ARANDELA PLANA	WASHER	RONDELLA PIANA	RONDELLE	4
31	REC93603-21111	93603-21111	AGUJA DE RODAMIENTO	BEARING NEEDLE	SPILLO DE CUSCINETTO	CLAVETTE DE PALIER	56
32	REC688-11634-00	688-11634-00	CIRCLIP	CIRCLIP	CIRCLIP	CIRCLIP	4
33	REC663-11633-00	663-11633-00	PIN, PISTÓN	PIN, PISTON	SPINOTTO PISTONE	AXE DE PISTON	2
	REC688-11631-03K	688-11631-03-94	PISTÓN STD	PISTON STD	PISTONE STD	PISTON STD	2
34	REC688-11635-03K	688-11635-03	PISTÓN 0.25mm O/S	PISTON 0.25mm O/S	PISTONE 0.25mm O/S	PISTON 0.25mm O/S	2
	REC688-11636-03K	688-11636-03	PISTÓN 0.50mm O/S	PISTON 0.50mm O/S	PISTONE 0.50mm O/S	PISTON 0.50mm O/S	2
35	REC688-11603-A0	688-11603-A0	KIT SEGMENTOS DE PISTÓN STD	PISTON RING SET STD	KIT FASCE STD	KIT SEGMENTS STD	2
	REC688-11605-A0	688-11605-A0	KIT SEGMENTOS DE PISTÓN 0.50mm O/S	PISTON RING SET 0.50mm O/S	KIT FASCE 0.50mm O/S	KIT SEGMENTS 0.50mm O/S	2
36	REC696-45113-00	696-45113-00	JUNTA BASE MOTOR	GASKET ENGINE	GUARNIZIONE BASE MOTORE	JOINT DE TETE MOTRICE	1



REC2TU3
REC2TU6
P. 38

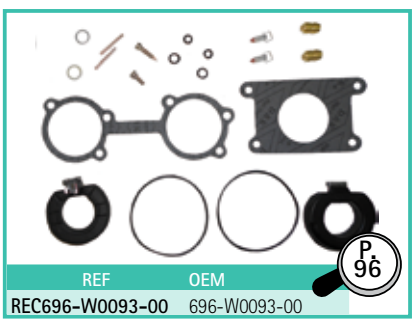
REF	OEM
REC696-W0093-00	696-W0093-00

P. 96

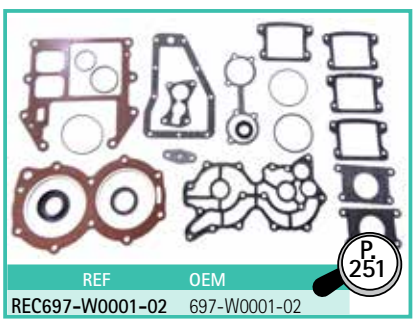
REF	OEM
REC697-W0001-02	697-W0001-02

P. 251

2T STROKES 50G/GEO/GETO • 60F/FEDO/FEHT/FEO/FET/FETO • 60TDR/TLR-B/TR-Z • 70B/BEHDO/BEMO/BEO/BETO • 70TDR/TR

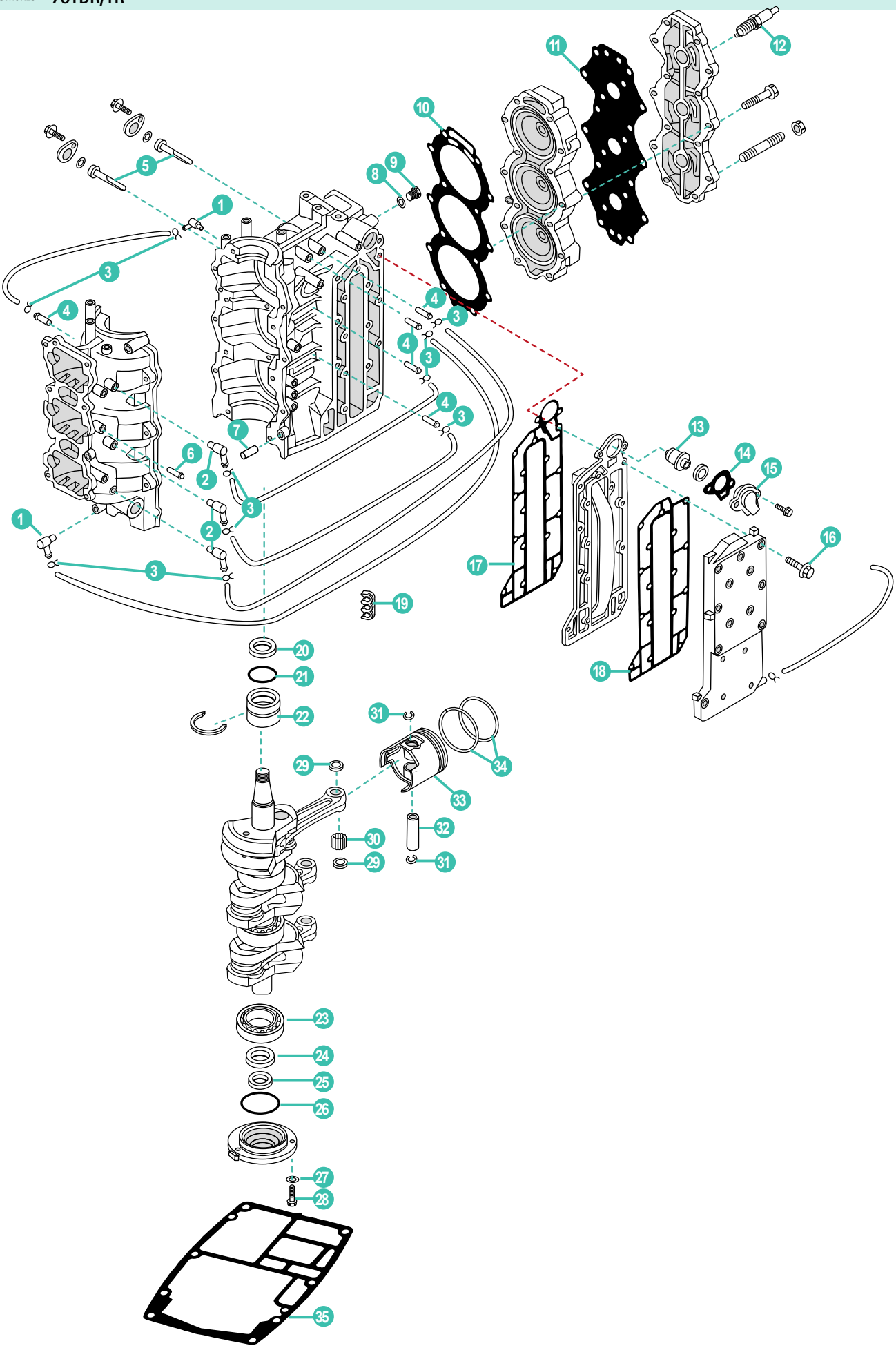

	REF	OEM					UN.
1	REC688-11370-00	688-11370-01	NIPLE DE MANGUERA	NIPPLE	TUBO	RACCORD D'EAU	2
2	REC650-11370-00	650-11370-01	NIPLE DE MANGUERA	NIPPLE	TUBO	RACCORD D'EAU	3
3	PAHT-2.5X60	90467-06016	CLIP	CLIP	CLIP	CLIP	10
4	REC624-14485-00	624-14485-00	PIPA DE AGUA	PIPE, WATER	TUBO	RACCORD TUYAU D'EAU	5
5	CM6H3-11325-01A	6H3-11325-01	ÁNODO	ANODE	ANODO	ANODE	2
6	PAF4-04010102	650-24378-00	PIPA DE AGUA	PIPE, WATER	TUBO	RACCORD TUYAU D'EAU	4
7	PAF25-00000014	93608-12063	PIN CENTRADOR	HOLLOW PIN	SPINOTTO DI CENTRAGGIO	PIN DE CENTRAGE	2
8	PAF15-04000003	90430-14115	JUNTA	GASKET	GUARNIZIONE	JOINT	1
9	PAF15-04000002	90340-14M00	TAPÓN	PLUG STRAIGHT SREW	TAPPO	BOUCHON	1
10	REC6H3-11181-A0	6H3-11181-A2	JUNTA CULATA	GASKET, CYLINDER HEAD	GUARNIZIONE TESTATA	JOINT DE CULASSE	1
11	REC6H3-11193-A1	6H3-11193-A1	JUNTA CULATÍN	GASKET COVER	GUARNIZIONE COPERCHIO	JOINT DE COUVRE CULASSE	1
12	NGKBR8HS-10	94702-00247	BUJÍA	SPARK PLUG	CANDELA	BOUGIE	3
13	REC6H3-12411-10	6H3-12411-10	TERMOSTATO	THERMOSTAT	TERMOSTATO	THERMOSTAT	1
14	REC6H3-12414-A1	6H3-12414-A1	JUNTA TAPA TERMOSTATO	GASKET, THERMOSTAT COVER	GUARNIZIONE COPERCHIO TERMOSTATO	JOINT COUVERCLE DE THERMOSTAT	1
15	PAF15-07010021	6H3-12413-00-1S	TAPA TERMOSTATO	COVER, THERMOSTAT	COPERCHIO TERMOSTATO	COUVERCLE DE THERMOSTAT	1
16	PAGB/T5782-M6X35	90119-06MA5	TORNILLO	BOLT	VITE	VIS	16
17	REC6H3-41112-A0	6H3-41112-A0	JUNTA DE ESCAPE	EXHAUST GASKET	GUARNIZIONE DI SCARICO	JOINT D'ECHAPPEMENT	1
18	REC6H3-41114-A0	6H3-41114-A0	JUNTA EXTERIOR, TAPA DE ESCAPE	GASKET, EXHAUST OUTER COVER	GUARNIZIONE ESTERIORE, COPERCHIO SCARICO	JOINT DE COUVERCLE EXT ECHAPPEMENT	1
19	PAF25-05000016	90464-07M05	ABRAZADERA	CLAMP	FASCETTA	COLLIER	1
20	REC93102-36M24	93102-36M24	RETÉN DE ACEITE	OIL SEAL	PARAOLIO	JOINT SPI	1
21	REC93210-46M16	93210-46M16	TÓRICA	O-RING	O-RING	JOINT TORIQUE	1
22	REC93311-636U6	93311-636U6	RODAMIENTO	BEARING	CUSCINETTO	ROULEMENT À BILLE	1
23	REC93306-306V1	93306-306V1	RODAMIENTO	BEARING	CUSCINETTO	ROULEMENT À BILLE	1
24	REC93102-30M23	93102-30M23	RETÉN DE ACEITE	OIL SEAL	PARAOLIO	JOINT SPI	1
25	REC93106-18M01	93106-18M01	RETÉN DE ACEITE	OIL SEAL	PARAOLIO	JOINT SPI	1
26	REC93210-65M50	93210-65M50	TÓRICA	O-RING	O-RING	JOINT TORIQUE	1
27	PAGB/T97.1-8	92995-06600	ARANDELA	WASHER	RONDELLA	RONDELLE	3
28	PAGB/T5783-M6X20	97095-06020	TORNILLO	BOLT	VITE	VIS	3
29	REC90201-20417	90201-20417	ARANDELA	WASHER	RONDELLA	RONDELLE	6
30	REC93603-18M09	93603-18M09	AGUJA DE RODAMIENTO	BEARING NEEDLE	SPILLO DE CUSCINETTO	CLAVETTE DE PALIER	84
31	REC688-11634-00	688-11634-10	CIRCLIP	CIRCLIP	CIRCLIP	CIRCLIP	6
32	REC6H3-11633-00	6H3-11633-00	PIN, PISTÓN	PIN, PISTON	SPINOTTO PISTONE	AXE DE PISTON	3
	REC6H3-11631-01K	6H3-11631-01-96	PISTÓN STD	PISTON STD	PISTONE STD	PISTON STD	3
33	REC6H3-11635-01K	6H3-11635-01	PISTÓN 0.25mm O/S	PISTON 0.25mm O/S	PISTONE 0.25mm O/S	PISTON 0.25mm O/S	3
	REC6H3-11636-01K	6H3-11636-01	PISTÓN 0.50mm O/S	PISTON 0.50mm O/S	PISTONE 0.50mm O/S	PISTON 0.50mm O/S	3
	REC6K5-11601-02	6K5-11601-02	KIT SEGMENTOS DE PISTÓN STD	PISTON RING SET STD	KIT FASCE STD	KIT SEGMENTS STD	3
34	REC6K5-11601-12	6K5-11601-12	KIT SEGMENTOS DE PISTÓN 0.25mm O/S	PISTON RING SET 0.25mm O/S	KIT FASCE 0.25mm O/S	KIT SEGMENTS 0.25mm O/S	3
	REC6K5-11601-22	6K5-11601-22	KIT SEGMENTOS DE PISTÓN 0.50mm O/S	PISTON RING SET 0.50mm O/S	KIT FASCE 0.50mm O/S	KIT SEGMENTS 0.50mm O/S	3
35	REC6H3-45113-00	6H3-45113-00	JUNTA BASE MOTOR	GASKET ENGINE	GUARNIZIONE BASE MOTORE	JOINT DE TETE MOTRICE	1



REC2TU3
REC2TU6

P. 38

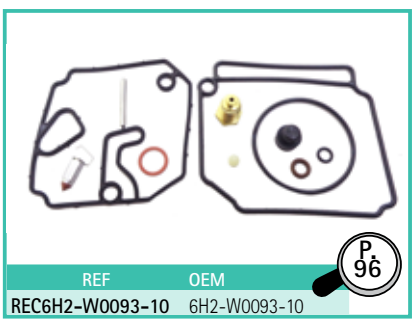

REF	OEM
REC6H2-W0093-10	6H2-W0093-10

P. 96

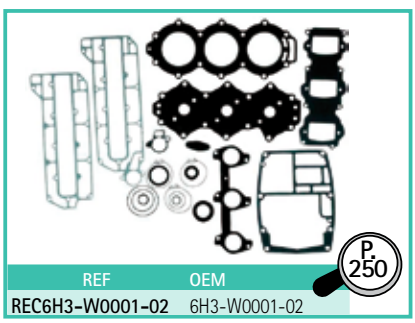

REF	OEM
REC6H3-W0001-02	6H3-W0001-02

P. 250

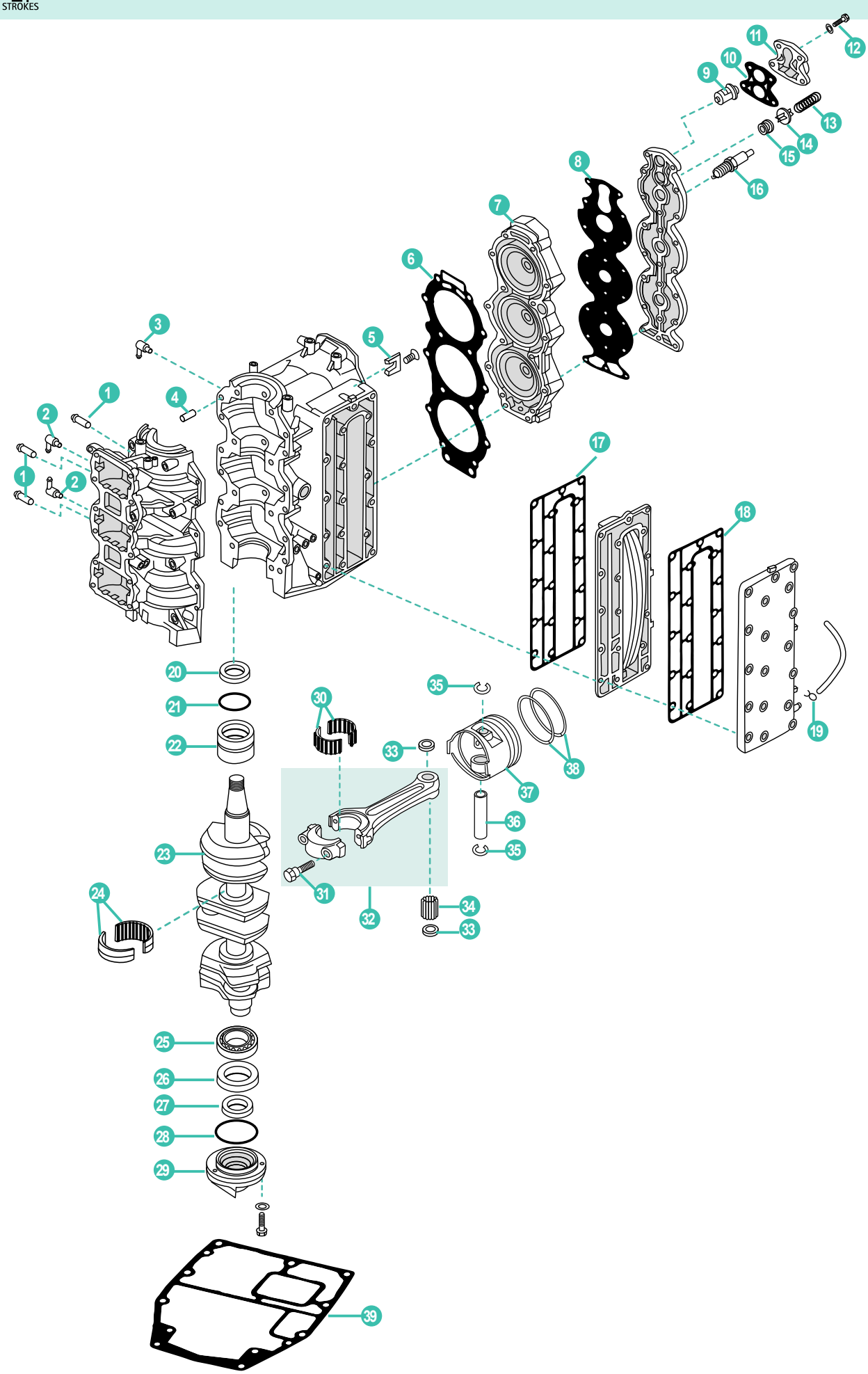
1
2
1
2
3
4
5
6
7
8
9
10
11
12
13
14
15
16
17
18
19
20
21
22
23
24
25
26
27
28
29
30
31
32
33
34
33
35
36
37
38
35
39

	REF	OEM					UN.
1	REC624-14485-00	624-14485-00	PIPA DE AGUA	PIPE, WATER	TUBO	RACCORD TUYAU D'EAU	4
2	REC688-11370-00	688-11370-01	NIPLE DE MANGUERA	NIPPLE	TUBO	RACCORD D'EAU	2
3	REC650-11370-00	650-11370-01	NIPLE DE MANGUERA	NIPPLE	TUBO	RACCORD D'EAU	1
4	PAF25-00000014	93608-12063	PIN CENTRADOR	HOLLOW PIN	SPINOTTO DI CENTRAGGIO	PIN DE CENTRAGE	2
5	TEN01147	688-11325-00	ÁNODO	ANODE	ANODO	ANODE	2
6	REC688-11181-A1	688-11181-A1	JUNTA CULATA	GASKET, CYLINDER HEAD	GUARNIZIONE TESTATA	JOINT DE CULASSE	1
7	REC688-11111-02-1S	688-11111-02-1S	CULATA	CYLINDER HEAD	TESTATA	CULASSE	1
8	REC688-11193-A1	688-11193-A1	JUNTA TAPA	GASKET, COVER	GUARNIZIONE COPERCHIO	JOINT DE COUVRE CULASSE	1
9	REC6E5-12411-30	688-12411-10	TERMOSTATO	THERMOSTAT	TERMOSTATO	THERMOSTAT	1
10	REC688-12414-A1	688-12414-A1	JUNTA TAPA TERMOSTATO	GASKET, THERMOSTAT COVER	GUARNIZIONE COPERCHIO TERMOSTATO	JOINT COUVERCLE DE THERMOSTAT	1
11	REC688-12413-00-1S	688-12413-00-1S	TAPA TERMOSTATO	COVER, THERMOSTAT	COPERCHIO TERMOSTATO	COUVERCLE DE THERMOSTAT	1
12	PAGB/T5783-M6X35	90119-06MA5	TORNILLO	BOLT, WITH WASHER	VITE	VIS	4
13	REC90501-16M11	90501-16M11	MUELLE	SPRING COMPRESSION	MOLLA	RESSORT	1
14	REC688-12416-00	688-12416-00	VÁLVULA CONTROL DE PRESIÓN	VALVE, PRESSURE CONTROL	VALVOLA ANTIPRESSIONE	SOUPAPE DE DEPRESSION	1
15	REC90480-20M05	90480-20M05	JUNTA GOMA	GROMMET	GUARNIZIONE GOMMA	JOINT	1
16	NGKB8HS-10	90472-00247	BUJÍA	SPARK PLUG	CANDELA	BOUGIE	3
17	REC688-41112-A0	688-41112-A0	JUNTA DE ESCAPE	EXHAUST GASKET	GUARNIZIONE DI SCARICO	JOINT D'ECHAPPEMENT	1
18	REC688-41114-A0	688-41114-A0	JUNTA EXTERIOR, TAPA DE ESCAPE	GASKET, EXHAUST OUTER COVER	GUARNIZIONE ESTERIORE, COPERCHIO SCARICO	JOINT DE COUVERCLE EXT ECHAPPEMENT	1
19	PAF4-04000030	90467-08004	PRESILLA	CLAMP	CLIP	CLIP	
20	REC93102-36M02	93102-36M02	RETÉN DE ACEITE	OIL SEAL	PARAOLIO	JOINT SPI	1
21	REC93210-46M16	93210-46M16	TÓRICA	O-RING	O-RING	JOINT TORIQUE	1
22	REC93310-636U4	93310-636U4	RODAMIENTO	BEARING	CUSCINETTO	PALIER	1
23	REC688-11411-00	688-11411-01	CIGÜEÑAL	CRANK ASSY	ALBERO MOTORE	VILEBREQUIN	1
24	REC93310-835U8	93310-835U8	RODAMIENTO	BEARING	CUSCINETTO	ROULEMENT À BILLE	2
25	REC93306-206U5	93306-206U5	RODAMIENTO	BEARING	CUSCINETTO	ROULEMENT À BILLE	1
26	REC93102-30M05	93102-30M05	RETÉN DE ACEITE	OIL SEAL	PARAOLIO	JOINT SPI	1
27	REC93104-20M02	93104-20M02	RETÉN DE ACEITE	OIL SEAL	PARAOLIO	JOINT SPI	1
28	REC93210-62269	93210-62269	TÓRICA	O-RING	O-RING	JOINT TORIQUE	1
29	REC6H1-15359-01-94	6H1-15359-01-94	CUERPO DEL RETÉN	SHELL, OIL SEAL	GUARNIZIONE CORPO	LOGEMENT JOINT D'HUILE	1
30	REC93310-730V8	93310-730V8	COJINETE DE BIELA	BEARING, CONNECTING ROD	CUSCINETTO BIELLA	PALIER DE BIELLE	3
31	REC90109-08022	90109-08022	TORNILLO	BOLT	VITE	VIS	2
32	REC688-11650-03	688-11650-03	BIELA	CONNECTING ROD ASSY	BEILLA	BIELLE	3
33	REC90201-20417	90201-20417	ARANDELA	WASHER PLATE	RONDELLA	RONDELLE	6
34	REC93603-21111	93603-21111	AGUJA DE RODAMIENTO	BEARING NEEDLE	SPILLO DE CUSCINETTO	CLAVETTE DE PALIER	84
35	REC688-11634-00	688-11634-00	CIRCLIP	CIRCLIP	CIRCLIP	CIRCLIP	6
36	REC663-11633-00	663-11633-00	PIN, PISTÓN	PIN, PISTON	SPINOTTO PISTONE	AXE DE PISTON	3
37	REC688-11631-03K	688-11631-03-94	PISTÓN STD	PISTON STD	PISTONE STD	PISTON STD	3
38	REC688-11603-A0	688-11603-A0	KIT SEGMENTOS DE PISTÓN STD	PISTON RING SET STD	KIT FASCE STD	KIT SEGMENTS STD	3
	REC688-11605-A0	688-11605-A0	KIT SEGMENTOS DE PISTÓN 0.50mm O/S	PISTON RING SET 0.50mm O/S	KIT FASCE 0.50mm O/S	KIT SEGMENTS 0.50mm O/S	3
39	REC688-45113-A0	688-45113-A0	JUNTA BASE MOTOR	GASKET ENGINE	GUARNIZIONE BASE MOTORE	JOINT DE TETE MOTRICE	1



REC2TU3
REC2TU6

P. 38

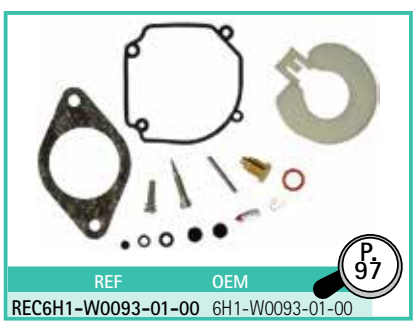

REF	OEM
REC6H1-W0093-01-00	6H1-W0093-01-00

P. 97

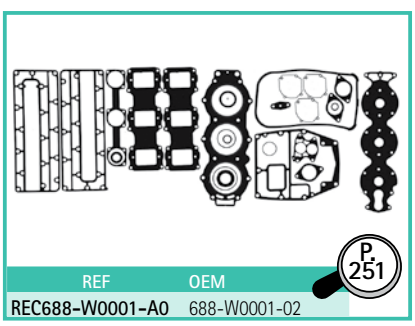

REF	OEM
REC688-W0001-A0	688-W0001-02

P. 251

2T STROKES 100A/AETO • 100TLR • 115AEL/B/BETO/BE-TR/C/CEO/CETO • C115TLR • 130B/BETO • 130TLR/TLRZ • 140A • 140B

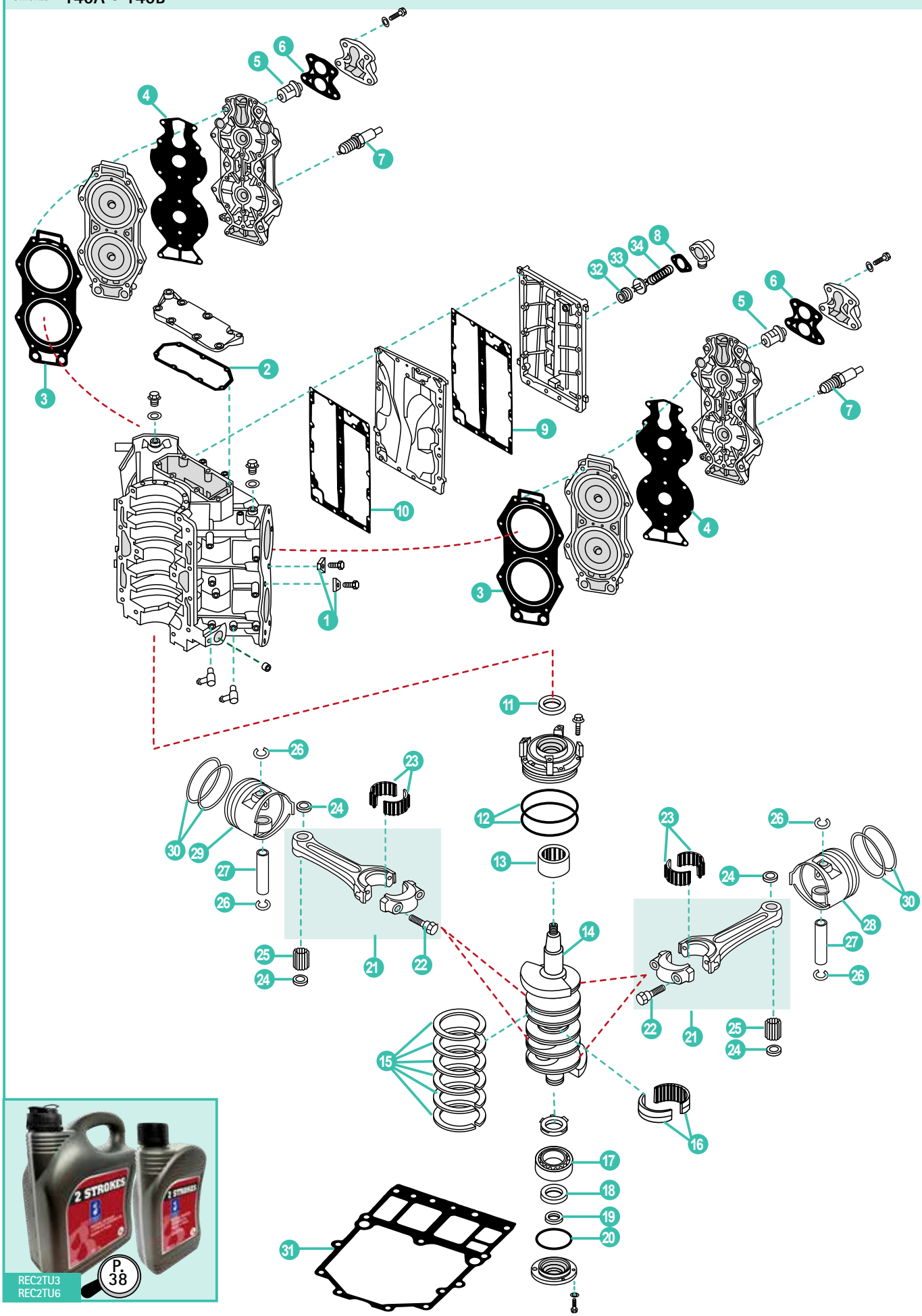

	REF	OEM					UN.
1	TEN01152	6E5-11325-00	ÁNODO	ANODE	ANODO	ANODE	4
2	REC6E5-11381-A1	6E5-11381-A2	JUNTA	GASKET	GUARNIZIONE	JOINT	1
3	REC6E5-11181-A0	6E5-11181-A2	JUNTA CULATA	GASKET, CYLINDER HEAD	GUARNIZIONE TESTATA	JOINT DE CULASSE	2
4	REC6E5-11193-A0	6E5-11193-A0	JUNTA CULATÍN	GASKET, HEAD COVER	GUARNIZIONE COPERCHIO TESTA	JOINT DE COUVRE CULASSE	2
5	REC6E5-12411-30	6E5-12411-30	TERMOSTATO	THERMOSTAT	TERMOSTATO	THERMOSTAT	2
6	REC688-12414-A1	688-12414-A1	JUNTA TAPA TERMOSTATO	GASKET, THERMOSTAT COVER	GUARNIZIONE COPERCHIO TERMOSTATO	JOINT COUVERCLE DE THERMOSTAT	2
7	NGKBR8HS-10	94702-00247	BUJÍA 100, 115	SPARK PLUG 100, 115	CANDELA 100, 115	BOUGIE 100, 115	4
	NGKBR9HS-10	94702-00309	BUJÍA 130	SPARK PLUG 130	CANDELA 130	BOUGIE 130	4
8	REC6G5-11382-A1	6G5-11382-A1	JUNTA	GASKET	GUARNIZIONE	JOINT	1
9	REC6E5-41112-A1	6E5-41112-A1	JUNTA EXTERIOR, TAPA DE ESCAPE	GASKET, EXHAUST OUTER COVER	GUARNIZIONE ESTERIORE, COPERCHIO SCARICO	JOINT DE COUVERCLE EXT ECHAPPEMENT	1
10	REC6E5-41112-A1	6E5-41112-A1	JUNTA DE ESCAPE	EXHAUST GASKET	GUARNIZIONE DI SCARICO	JOINT D'ECHAPPEMENT	1
11	REC93102-40M14	93102-40M14	RETÉN DE ACEITE	OIL SEAL	PARAOLIO	JOINT SPI	1
12	REC93211-04001	93211-04001	TÓRICA	O-RING	O-RING	JOINT TORIQUE	2
13	REC93311-940U3	93311-940U3	RODAMIENTO	BALL BEARING	CUSCINETTO	ROULEMENT À BILLE	1
14	REC6N7-11411-00	6N7-11411-00	CIGÜEÑAL	CRANKSHAFT	ALBERO MOTORE	VILEBREQUIN	1
15	REC6E5-11447-00	6E5-11447-00	ARO	SEAL, CRANK	O-RING	JOINT TORIQUE	6
16	REC93310-954U1	93310-954U1	RODAMIENTO	BALL BEARING	CUSCINETTO	ROULEMENT À BILLE	1
17	REC93306-208U0	93306-208U0	RODAMIENTO	BALL BEARING	CUSCINETTO	ROULEMENT À BILLE	1
18	REC93102-35M13	93102-35M13	RETÉN DE ACEITE	OIL SEAL	PARAOLIO	JOINT SPI	1
19	REC93101-22M15	93101-22M15	RETÉN DE ACEITE	OIL SEAL	PARAOLIO	JOINT SPI	1
20	REC93210-74M35	93210-74M35	TÓRICA	O-RING	O-RING	JOINT TORIQUE	1
21	REC6R5-11650-10	6R5-116950-0	BIELA	CONNECTING ROD ASSY	BIELLA	BIELLE	4
22	REC90109-08M71	90109-08M71	TORNILLO	BOLT	VITE	VIS	8
23	REC93310-836V2	93310-836V2	COJINETE DE BIELA	BEARING, CONNECTING ROD	CUSCINETTO BIELLA	PALIER DE BIELLE	4
24	REC90201-23M01	90201-23M01	ARANDELA	WASHER	RONDELLA	RONDELLE	8
24	REC90201-21M75	90201-21M75	ARANDELA	WASHER	RONDELLA	RONDELLE	8
25	REC93310-32337	93310-323V6	AGUJA DE RODAMIENTO	BEARING NEEDLE	SPILLO DE CUSCINETTO	CLAVETTE DE PALIER	4
26	REC6R5-11634-00	6R5-11634-10	CIRCLIP	CIRCLIP	CIRCLIP	CIRCLIP	8
27	REC6R5-11633-00	6R5-11633-10	PIN, PISTÓN	PIN, PISTON	SPINOTTO PISTONE	AXE DE PISTON	4
28	REC6R5-11642-01K	6R5-11642-11-93	PISTÓN STD 2	PISTON STD 2	PISTONE STD 2	PISTON STD 2	2
29	REC6R5-11631-11K	6R5-11361-11-93	PISTÓN STD 1	PISTON STD 1	PISTONE STD 1	PISTON STD 1	2
	REC64D-11603-01	64D-11603-01	KIT SEGMENTOS DE PISTÓN STD	PISTON RING SET STD	KIT FASCE STD	KIT SEGMENTS STD	4
30	REC64D-11604-01	64D-11604-01	KIT SEGMENTOS DE PISTÓN 0.25mm O/S	PISTON RING SET 0.25mm O/S	KIT FASCE 0.25mm O/S	KIT SEGMENTS 0.25mm O/S	4
	REC64D-11605-01	64D-11605-01	KIT SEGMENTOS DE PISTÓN 0.50mm O/S	PISTON RING SET 0.50mm O/S	KIT FASCE 0.50mm O/S	KIT SEGMENTS 0.50mm O/S	4
31	REC6G5-45113-A1	6G5-45113-A1	JUNTA BASE MOTOR	GASKET ENGINE	GUARNIZIONE BASE MOTORE	JOINT DE TETE MOTRICE	1
32	REC90480-20M05	90480-20M05	JUNTA GOMA	GROMMET	GUARNIZIONE GOMMA	JOINT	1
33	REC60H-12416-00	60H-12416-00	VÁLVULA CONTROL DE PRESIÓN	VALVE, PRESSURE CONTROL	VALVOLA ANTIPRESSIONE	SOUPAPE DE DEPRESSION	1
34	REC90501-16M11	90501-16M11	MUELLE	SPRING COMPRESSION	MOLLA	RESSORT	1

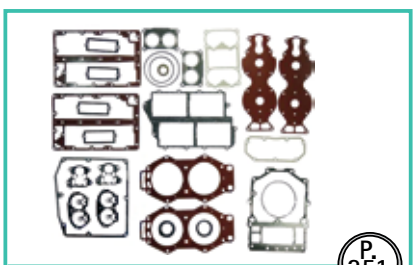

P. 251

REF	OEM
REC6E5-W0001-A2	6N6-W0001-A3

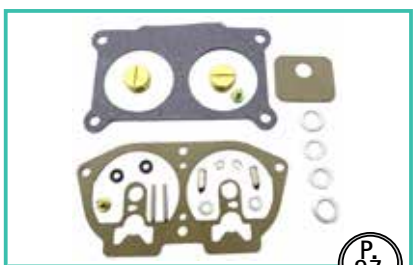

P. 97

REF	OEM
REC6E5-W0093-06	6E5-W0093-06

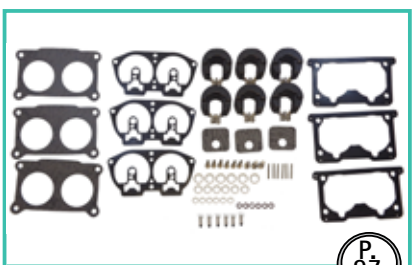

P. 97

REF	OEM
REC6N6-W0093-02	6N6-W0093-02

2T STROKES 150AET • 150F/FETO • 150L/SL150 • 150TR/150TXRA • D150H • 175D/DETO • S175 • L175 • 175D/DETO • S175 -L175 • 200AET • 200G/GETO • 200F/FETO • L200 • 200TLR • 225D/DET/DETO • L225A • L225B

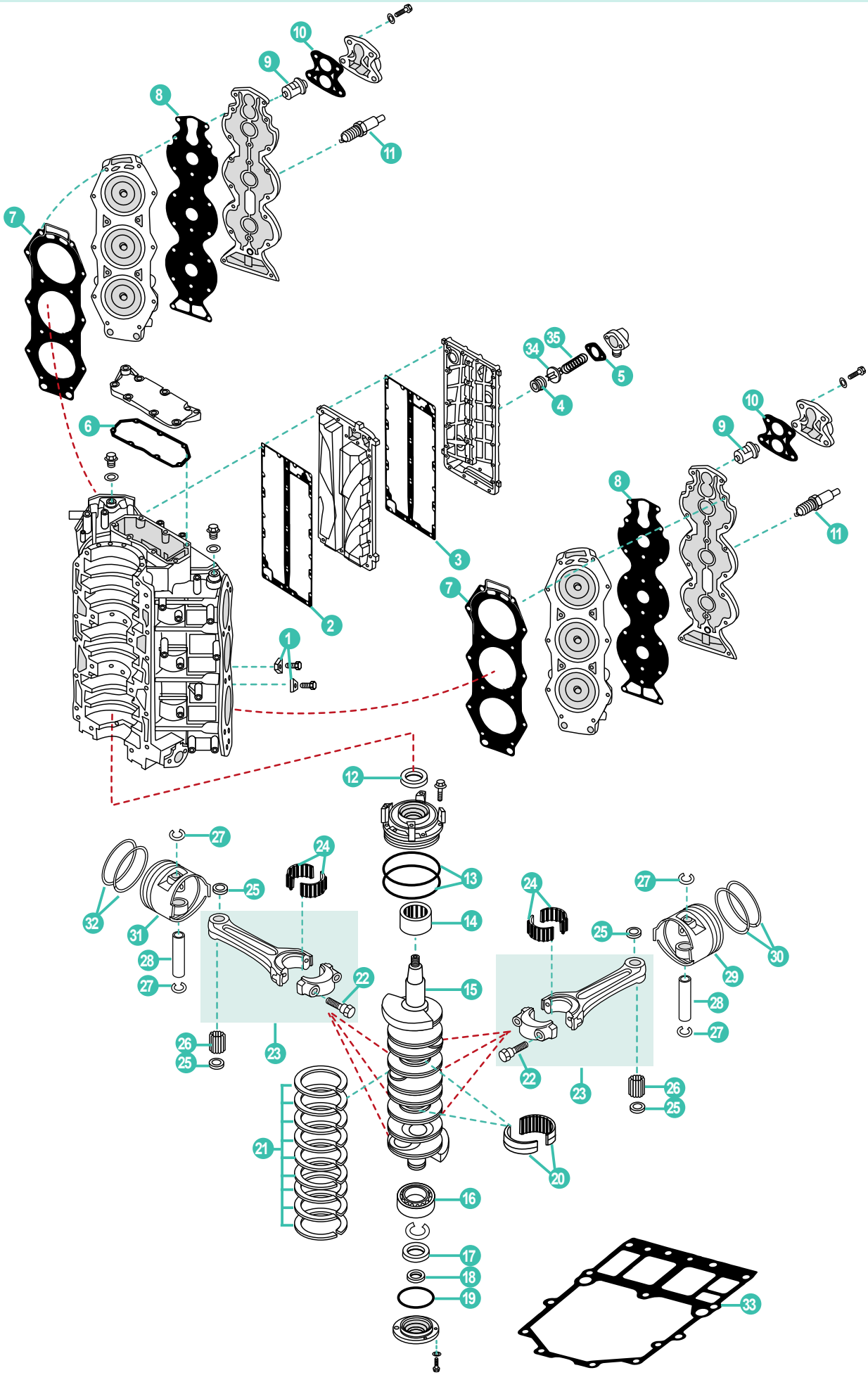

	REF	OEM					UN.
1	TEN01152	6E5-11325-00	ÁNODO	ANODE	ANODO	ANODE	8
2	REC6G5-41112-A1	6G5-41112-A1	JUNTA DE ESCAPE	EXHAUST GASKET	GUARNIZIONE DI SCARICO	JOINT D'ECHAPPEMENT	1
3	REC6G5-41114-A0	6G5-41114-A0	JUNTA EXTERIOR, TAPA DE ESCAPE	GASKET, EXHAUST OUTER COVER	GUARNIZIONE ESTERIORE, COPERCHIO SCARICO	JOINT DE COUVERCLE EXT ECHAPPEMENT	1
4	REC90480-20M05	90480-20M05	JUNTA DE GOMA	GROMMET	GUARNIZIONE GOMMA	JOINT	1
5	REC6G5-11382-A1	6G5-11382-A1	JUNTA	GASKET	GUARNIZIONE	JOINT	1
6	REC6E5-11381-A1	6E5-11381-A2	JUNTA	GASKET	GUARNIZIONE	JOINT	1
7	REC6G5-11181-A2	6G5-11181-A3	JUNTA CULATA	GASKET, CYLINDER HEAD	GUARNIZIONE TESTATA	JOINT DE CULASSE	2
8	REC6G5-11193-A0	6F5-11193-A0	JUNTA TAPA	GASKET, COVER	GUARNIZIONE COPERCHIO	JOINT DE COUVRE CULASSE	2
9	REC6E5-12411-30	6E5-12411-30	TERMOSTATO	THERMOSTAT	TERMOSTATO	THERMOSTAT	2
10	REC688-12414-A1	688-12414-A1	JUNTA TAPA TERMOSTATO	GASKET, THERMOSTAT COVER	GUARNIZIONE COPERCHIO TERMOSTATO	JOINT COUVERCLE DE THERMOSTAT	2
11	NGKBR8HS-10	94702-00271	BUJÍA	SPARK PLUG	CANDELA	BOUGIE	6
12	REC93102-40M14	93102-40M14	RETÉN DE ACEITE	OIL SEAL	PARAOLIO	JOINT SPI	1
13	REC93211-04001	93211-04001	TÓRICA	O-RING	O-RING	JOINT TORIQUE	2
14	REC93311-940U3	93311-940U3	RODAMIENTO	BEARING	CUSCINETTO	ROULEMENT À BILLE	1
	REC93311-940V0	93311-940V0	RODAMIENTO CIGÜEÑAL (6D0)	CRANKSAHFT BEARING (6D0)	CUSCINETTO ALBERO MOTORE (6D0)	ROULEMENT DE VILEBREQUIN (6D0)	1
15	REC6G5-11411-02	6G5-11411-02	CIGÜEÑAL	CRANKSHAFT	ALBERO MOTORE	VILEBREQUIN	1
16	REC93306-208U0	93306-208U0	RODAMIENTO	BEARING	CUSCINETTO	ROULEMENT	1
17	REC93102-35M13	93102-35M13	RETÉN DE ACEITE	OIL SEAL	PARAOLIO	JOINT SPI	1
18	REC93101-22M15	93101-22M15	RETÉN DE ACEITE	OIL SEAL	PARAOLIO	JOINT SPI	1
19	REC93210-74M35	93210-74M35	TÓRICA	O-RING	O-RING	JOINT TORIQUE	1
20	REC93310-954U1	93310-954U1	RODAMIENTO	BEARING	CUSCINETTO	ROULEMENT À BILLE	1
	REC93310-959U0	93310-959U0	RODAMIENTO CIGÜEÑAL **(6D0)**	CRANKSAHFT BEARING **(6D0)**	CUSCINETTO ALBERO MOTORE **(6D0)**	ROULEMENT DE VILEBREQUIN **(6D0)**	1
21	REC6E5-11447-00	6E5-11447-00	ARILLO	SEAL, CRANK	O-RING	JOINT	9
22	REC90109-08022	90109-08022	TORNILLO	BOLT	VITE	VIS	2
23	REC6R5-11650-10	6F5-11650-11	BIELA	CONNECTING ROD ASSY	BIELLA	BIELLE	6
24	REC93310-836V2	93310-836V2	COJINETE DE BIELA	BEARING, CONNECTING ROD	CUSCINETTO BIELLA	PALIER DE BIELLE	6
25	REC90201-23M01	90201-23M01	ARANDELA	WASHER PLATE	RONDELLA	RONDELLE	12
	REC90201-21M75	90201-21M75	ARANDELA **(61A)**	WASHER (61A)	RONDELLA **(61A)**	RONDELLE **(61A)**	12
26	REC93310-32337	93310-32337	AGUJA DE RODAMIENTO	BEARING NEEDLE	SPILLO DE CUSCINETTO	CLAVETTE DE PALIER	6
	REC93310-32668	93310-32668	AGUJA DE RODAMIENTO **(250G)**	BEARING NEEDLE **(250G)**	SPILLO DE CUSCINETTO **(250G)**	CLAVETTE DE PALIER **(250G)**	6
27	REC6R5-11634-00	6R5-11634-10	CIRCLIP	CIRCLIP	CIRCLIP	CIRCLIP	12
28	REC6R5-11633-00	6R5-11633-10	PIN, PISTÓN	PIN, PISTON	SPINOTTO PISTONE	AXE DE PISTON	6
29	REC64D-11642-00K	64D-11642-02-90	PISTON STD **2**	PISTON STD **2**	PISTONE STD **2**	PISTON STD **2**	3
	REC64D-11603-01	64D-11603-02	KIT SEGMENTOS DE PISTÓN STD	PISTON RING SET STD	KIT FASCE STD	KIT SEGMENTS STD	3
30	REC64D-11604-01	64D-11604-01	KIT SEGMENTOS DE PISTÓN 0.25mm O/S	PISTON RING SET 0.25mm O/S	KIT FASCE 0.25mm O/S	KIT SEGMENTS 0.25mm O/S	3
	REC64D-11605-01	64D-11605-02	KIT SEGMENTOS DE PISTÓN 0.50mm O/S	PISTON RING SET 0.50mm O/S	KIT FASCE 0.50mm O/S	KIT SEGMENTS 0.50mm O/S	3
31	REC64D-11631-00K	64D-11631-02-90	PISTON STD **1**	PISTON STD **1**	PISTONE STD **1**	PISTON STD **1**	3
	REC64D-11603-01	64D-11603-02	KIT SEGMENTOS DE PISTÓN STD	PISTON RING SET STD	KIT FASCE STD	KIT SEGMENTS STD	3
32	REC64D-11604-01	64D-11604-02	KIT SEGMENTOS DE PISTÓN 0.25mm O/S	PISTON RING SET 0.25mm O/S	KIT FASCE 0.25mm O/S	KIT SEGMENTS 0.25mm O/S	3
	REC64D-11605-01	64D-11605-02	KIT SEGMENTOS DE PISTÓN 0.50mm O/S	PISTON RING SET 0.50mm O/S	KIT FASCE 0.50mm O/S	KIT SEGMENTS 0.50mm O/S	3
33	REC6G5-45113-A1	6G5-45113-A1	JUNTA BASE MOTOR	GASKET ENGINE	GUARNIZIONE BASE MOTORE	JOINT DE TETE MOTRICE	1
34	REC60H-12416-00	60H-12416-00	VÁLVULA CONTROL DE PRESIÓN	VALVE, PRESSURE CONTROL	VALVOLA ANTIPRESSIONE	SOUPAPE DE DEPRESSION	1
35	REC90501-16M11	90501-16M11	MUELLE	SPRING COMPRESSION	MOLLA	RESSORT	1



REC2TU3
REC2TU6

P. 38



REF	OEM
REC64D-W0093-00	64D-W0093-00

P. 97

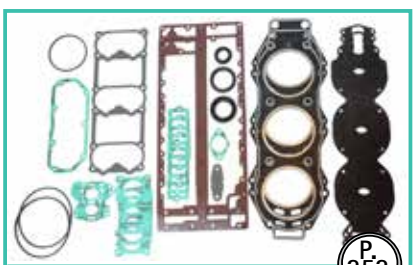

REF	OEM
REC6G5-W0001-A3	6G5-W0001-A3-00

P. 252

2T STROKES

JUNTAS DE CULATA | CYLINDER HEAD GASKET | GUARNIZIONE DE TESTATA | JOINT DE CULASSE

REF	OEM
REC6F8-11181-A0	6F8-11181-A1

2CMH (2003+)

P. 220



REF	OEM
REC677-11181-A0	677-11181-A1

E8D/DMH (1997-03)

P. 225



REF	OEM
REC63V-11181-A1	63V-11181-A1

9.9F/MH/MSH
E9.9D
15F/FMH/MSH
E15D
13.5 AWH/AMH (1995+)

P. 227



REF	OEM
REC6E7-11181-00	6E7-11181-A2

9.9D
15D (1988-96)



REF	OEM
REC6L2-11181-A1	6L2-11181-A3

20D/M
25D/M/N (1988+)



REF	OEM
REC695-11181-00	695-11181-A1

20C
25D (1986-02)



REF	OEM
REC6H3-11181-A0	6H3-11181-A2

25B
50G
60T
E60
60FE
70B/ET/CE (1984+)

P. 241



REF	OEM
REC6H4-11181-00	6H4-11181-A2

25Q
40N/H
50E/D (1984-94)



REF	OEM
REC61N-11181-00	61N-11181-A2

25VE/VM
E25A/BMH
30G
E30HMH/H (1996-12)



REF	OEM
REC689-11181-00	689-11181-A2

30A (1990-92)



REF	OEM
REC6J8-11181-A2	6J8-11181-A2

30D
25J (1986+)

P. 231



REF	OEM
REC6F5-11181-A2	6F5-11181-A2

40GWH/JWH
E40GMH/JMH (2003)

P. 235



REF	OEM
REC63D-11181-A1	63D-11181-A2

40V
C40/EL/TLR/Y
50H/TLR/TR
(1995+)

P. 237

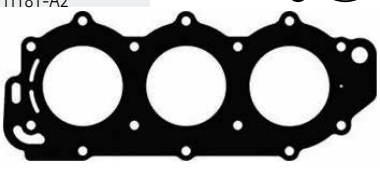

REF	OEM
REC6R7-11181-A0	6R7-11181-A1

40G (1993)



REF	OEM
REC676-11181-01	676-11181-A2

40QE/QM/QWC (1990-98)



REF	OEM
REC66T-11181-00	66T-11181-A0

P. 233

40X
E40X/M (1998-09)



REF	OEM
REC697-11181-A1	697-11181-A2

P. 239

E55CMH
E48CMH
55BET
55B/BE/BM (1990-05)



REF	OEM
REC688-11181-A1	688-11181-A2

P. 243

75A/AE/CET
80A/AE
85A/AE
90A/AE/TR (1986-14)



REF	OEM
REC6E5-11181-A0	6E5-11181-A2

P. 245

100A
115A/E/B/C
C115T 130B
140A (1984+)



REF	OEM
REC6G5-11181-A2	6G5-11181-A3

P. 247

150A/E/C/AET
175AET/B/D
200AET/B/C/FETGE
225AET/BETO/D



REF	OEM
REC60V-11181-00	60V-11181-00

Z250
VZ250
LZ250 (2003-07)



REF	OEM
REC68F-11181-00	68F-11181-00

Z/VZ/LZ200 (2001-07)
Z/VZ/LZ150 (2000-07)
Z/VZ175 (2001-07)



REF	OEM
REC6D0-11181-00	6D0-11181-00

VZ/LZ/Z300 (2004-07)



new

REF	OEM
REC61A-11181-A0	69L-11181-00

225G/F (1194-03)
250A/B/F (1992-06)

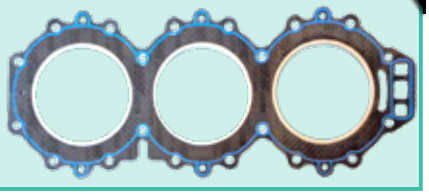

2T STROKES KITS JUNTAS DE CULATA — CYLINDER HEAD GASKET KIT — KIT GUARNIZIONE TESTATA — KITS JOINT DE CULASSE

REF	OEM
REC63V-W0001-00	63V-W0001-01

9.9-15F/FMH/FEMH/MSH (1995-00)
13.5AWH (1998)



new

REF	OEM
REC6E7-W0001-A1	6E7-W0001-00 6E7-W0001-A1

9.9D
15D

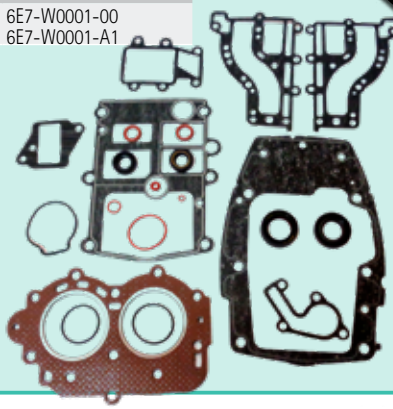

REF	OEM
REC61T-W0001-02	61T-W0001-02

E25A, 25VM, 30G/GE/A



REF	OEM
REC695-W0001-A2	695-W0001-01

25D/DE (1985-92)
20CM/C (1985-92)

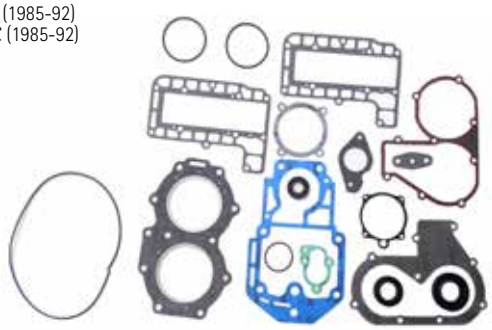

REF	OEM
REC6H3-W0001-02	6H3-W0001-02

25B/BETO (1994-95)
50G/GEO/GETOL (1994-98)
60FEO/FETO/FEDO/TLR/FEHTO/TR (1994-2007)

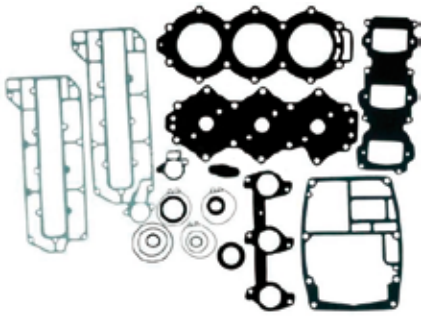

REF	OEM
REC6R6-W0001-02-00	6R6-W0001-02

40QE-2 (1995-97)
40QM (1996)
40QWC (1998)



REF	OEM
REC6H4-W0001-04	6H4-W0001-04

25QEO (1992-94)
40HE (1992-94)
50DE/DEMTO (1992-94)

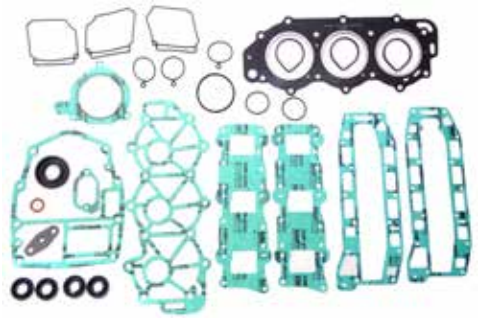

REF	OEM
REC66T-W0001-01	66T-W0001-01

E40X/XMH/XW/
MLHZ (2001-13)



REF	OEM
REC6L2-W0001-03	6L2-W0001-A2

25NE (1988-93)
20DM (1988-93)
25NEMO (1991-92)
20D/DEO (1989-92)

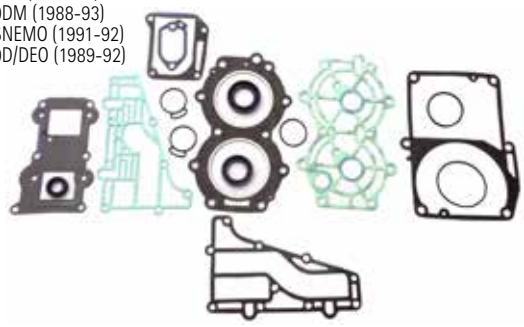

REF	OEM
REC6H4-W0001-A1	6H4-W0001-01

40N (1984)
40H (1985-98)
50D (1985-98)
50ETN (1984)

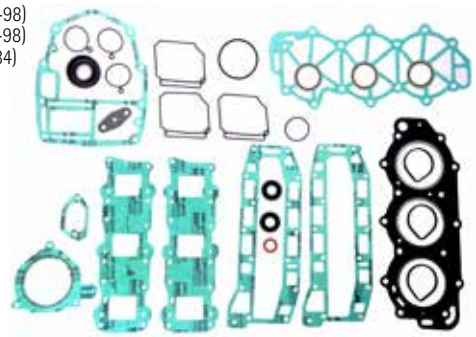

REF	OEM
REC63D-W0001-00	63D-W0001-00

50H/HRDO/HMDH/HETO (1995-03)
40V/VMH/VETO/MLH/MHO/VE/VEO (1995-13)
40VEMHD/TLRZ/YETO (1997-07)
C40T/TLR (1995-02)

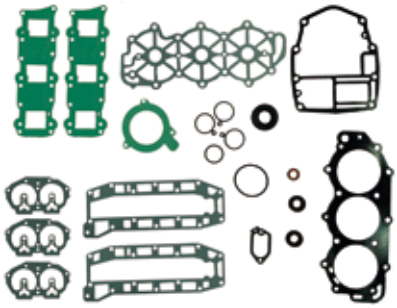

REF	OEM
REC6H1-W0001-00-00	6H1-W0001-A1

80A/AE (1984-91)
80AEO (1992-93)
90A/AEO/AETO/ETN (1984-91)
90AEO (1992)

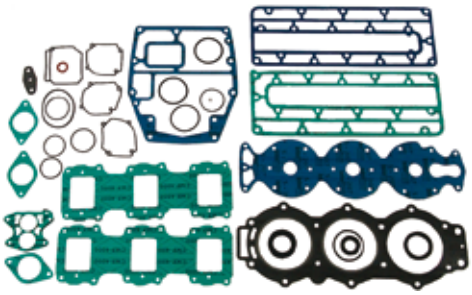

REF	OEM
REC697-W0001-02	697-W0001-A0

55BET (1990)

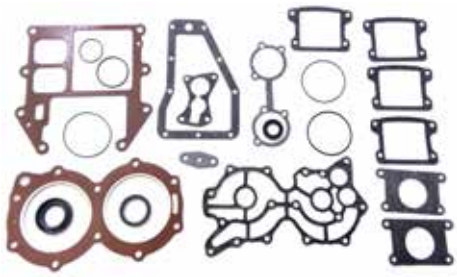

REF	OEM
REC6E5-W0001-A2	6E5-W0001-A2

L130BETO (1991-99)
115CEO/CETO (1991-96)
100A/AETO/TLR (1996-00)

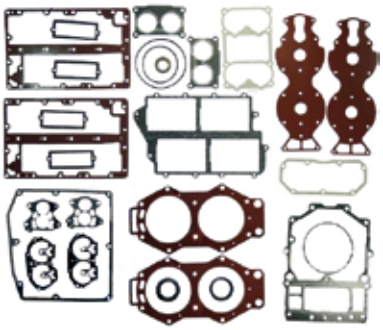

REF	OEM
REC6K5-W0001-02	6K5-W0001-02

E60H/MHZ/HE/HM (1996-02)

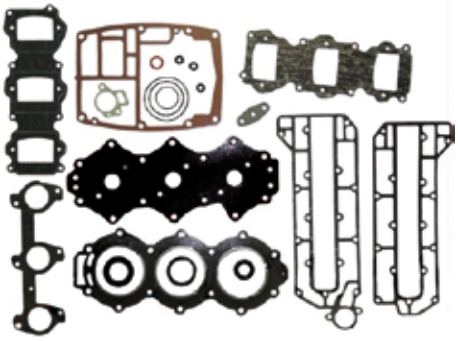

REF	OEM
REC6F3-W0001-04-00	6F3-W0001-A4

115BETO (1991-93)
115B (1988-00)
115ETN (1984)
115A (1987)
140AETO/BETO (1984-89)
115BE (1992)

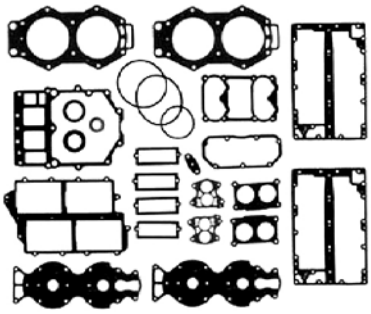

REF	OEM
REC688-W0001-A0	688-W0001-A0

75A/AE (1990-91)
85A/AE (1990-91)

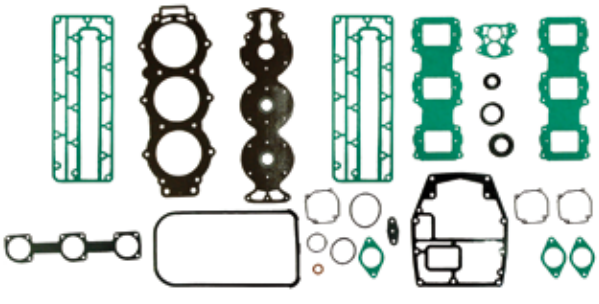

REF	OEM
REC6R3-W0001-03	6R3-W0001-A3

L/150 CETO (1990-95)
L/200 BETO (1993-95)
175BETO/ET (1990-95)
L200ETD (1990)
150CED/ETD (1990)
200ET (1990)

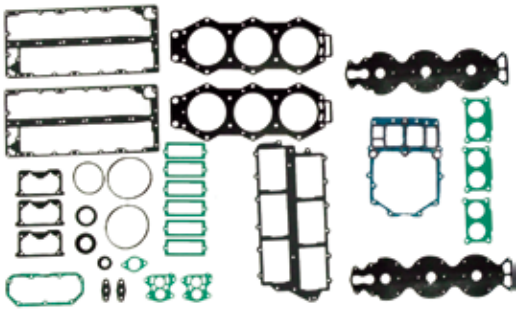

REF	OEM
REC68F-W0001-01	68F-W0001-01

LZ200 (2004-10)
VZ200 (2004)
Z200 (2004-10)
Z
VZ200TLRC/PETO/TLR2D/PETOL/TXRC/
NETO-L/TR/NETOX/Z175GETO/GETOX/TR/TXR (2004-07)



REF	OEM
REC61A-W0001-01	61A-W0001-A1

250ETD (1990)
250AETO/AET/B (1990-96)
L250A/AET/AETO (1992-96)
225C (1994-95)
L225CETO (1994)

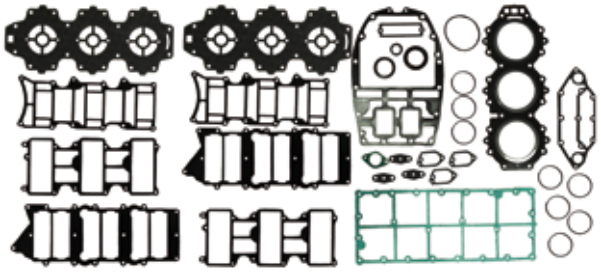

REF	OEM
REC6G5-W0001-A3	6G5-W0001-03

200CETO (1992-93)
PROV200 (1991-94)
225BET/BETO (1991-95)
150A/AETO/AETL/AETX (1998-02)

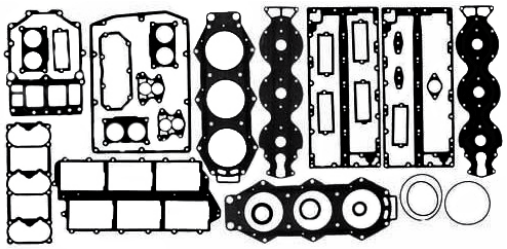

REF	OEM
REC6D0-W0001-00	6D0-W0001-00

Z300AETO/TR
LZ300AETO/TR (2004-07)

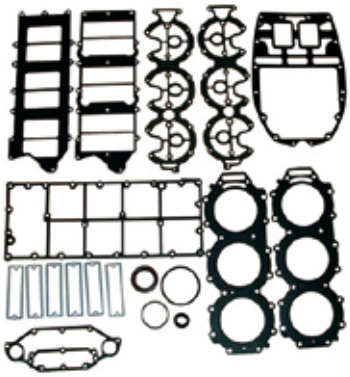

2T STROKES

JUNTAS BASE DE MOTOR — CYLINDER GASKET

GUARNIZIONE BASE MOTORE — JOINTS DE TETE MOTRICE

REF	OEM
REC6E0-45113-A1	6E0-45113-A1

4A/AC/AS/MSH
5C/CS/CMH

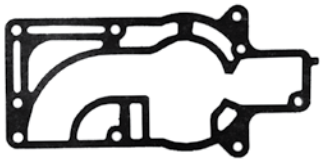

REF	OEM
REC677-45113-A0	

E8D/DMH



REF	OEM
REC6G1-45113-A1	6G1-45113-A1

8N/C/J/T/M
6C/J/D/T/M

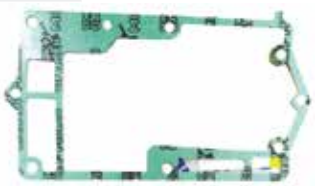

new

REF	OEM
REC6B4-11351-A1	6B4-11351-A1

9.9/15 HP D 6B3-6B4
(2003)

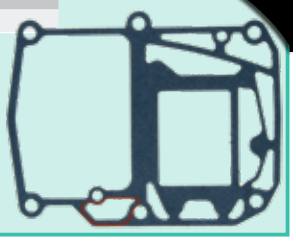

REF	OEM
REC63V-45113-A1	63V-45113-A1

9.9FEM/F/MSH/FMH/MH
13.5 AW/AMH
15F/FEM/MSH/FMH/MH

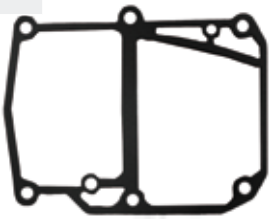

REF	OEM
REC682-11351-A0	682-11351-A0

9.9D
15D

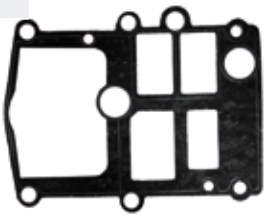

REF	OEM
REC6L2-45113-A2	6L2-45113-A1

20D
25D/N/M



REF	OEM
REC6H3-45113-00	6H3-45113-A0

60FE/TLR/F,
50G/GE
E60H
70B/BE/CE/TR

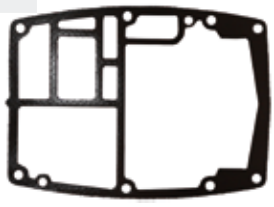

REF	OEM
REC61T-45113-A0	61T-45113-A0

25VE/BMH
30G/HW



REF	OEM
REC688-45113-A0	688-45113-A0

75A/AE/CE/TL
85A/AE
80A/AE
90A/AE/ETN

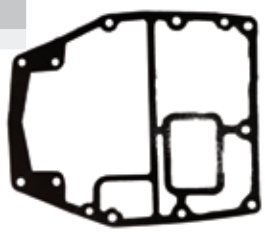

REF	OEM
REC6J8-45113-00	6J8-45113-A0

25J
30D/DMH/DE/E/M



REF	OEM
REC6G5-45113-A1	6G5-45113-A2

115ETN/A/B
130BE
150ETN/AET/CET/F/TXR/G
140AET/BET
175AET/BET/DE
150BET
200ETN/AET/CET/BET/AF/G
220AET
225AET/BET/D

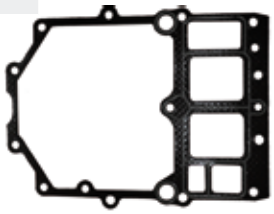

REF	OEM
REC6H4-45113-00	6H4-45113-A0

25Q
40N/H/E/V/T/Y
50D/H/T

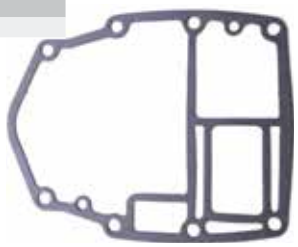

REF	OEM
REC6E5-45113-A2	6E5-45113-A0

115B/ET
140AE/BE

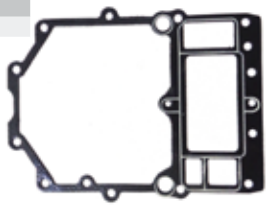

REF	OEM
REC6F5-45113-A0	6F5-45113-A0

E40G/E40J/40G/40J/40Q

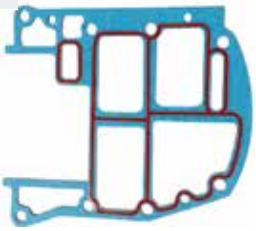

REF	OEM
REC68F-45113-01	68F-45113-01

Z/VZ150
Z/ VZ175
VZ-Z200/200A/F/J
150F/A
Z200



REF	OEM
REC66T-45113-A0	66T-45113-A0

40X/E40X



REF	OEM
REC60V-45113-02	60V-45113-02

LZ/Z/VZ
250D/T/F
300A/B/T (2004-07)

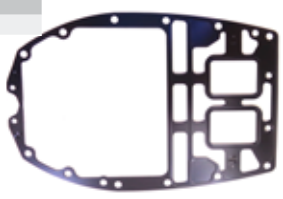

REF	OEM
REC696-45113-00	696-45113-A0

55B/E55
E48



REF	OEM
REC61A-45113-A0	61A-45113-A0

Z/VZ250
Z300

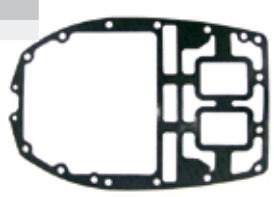

2T STROKES GUÍA JUNTAS DE MOTOR | ENGINE GASKET GUIDE | GUIDA GUARNIZIONE MOTORE | GUIDE JOINTS DE MOTEURS

		CYL	JUNTA CULATA CYLINDER HEAD GASKET GUARNIZIONE TESTAT JOINT DE CULASSE	KIT JOINTS	JUNTA BASE MOTOR CYLINDER GASKET GUARNIZIONE BASE MOTORE JOINT DE TETE MOTRICE
2CMH	2010	1	REC6F8-11181-A0		REC646-14623-A1
E8D/DMH	1997-03	2	REC677-11181-A0		REC677-45113-A0
9.9D	1988-96	2	REC6E7-11181-00	REC6E7-W0001-A1	REC682-45113-A0
9.9F/FM/MSH/E9.9D	1995	2	REC63V-11181-A1	REC63V-W0001-00	REC63V-45113-A1
13.5AWH/AMH	1995	2	REC63V-11181-A1	REC63V-W0001-00	REC63V-45113-A1
15D	1988-95	2	REC6E7-11181-00	REC6E7-W0001-A1	REC682-45113-A0
15F/FMH/MSH/E15D	1995	2	REC63V-11181-A1	REC63V-W0001-00	REC63V-45113-A1
20C	1986-02	2	REC695-11181-00	REC695-W0001-A2	REC61T-45113-A0
20D/20DM	1988	2	REC6L2-11181-A1	REC6L2-W0001-03	REC6L2-45113-A2
25DE/M/N	1998	2	REC6L2-11181-A1	REC6L2-W0001-03	REC6L2-45113-A2
25DE/M/N	1986-02	2	REC695-11181-00	REC695-W0001-A2	REC61T-45113-A0
25VE/VM/BMH/E25A	1996-12	2	REC61N-11181-00	REC61T-W0001-02	REC61T-45113-A0
25Q/QEO	1990-94	3	REC6H4-11181-00	REC6H4-W0001-A1	REC6H4-45113-00
25J/JEO/JETO	1987 -99	3	REC6J8-11181-A2		REC6J8-45113-00
25B/BETO	1994-95	3	REC6H3-11181-A0	REC6H3-W0001-02	REC6H3-45113-00
25B/BMH	1996-10	2	REC61N-11181-00	REC61T-W0001-02	REC61T-45113-A0
30A	1990-92	2	REC689-11181-00	REC61T-W0001-02	REC61T-45113-A0
30G/E30HMH/H	1996-12	2	REC61N-11181-00		REC61T-45113-A0
30D	1986	3	REC6J8-11181-A2		REC6J8-45113-00
40QE/QM/QWC	1990-98	2	REC676-11181-01	REC6R6-W0001-02-00	REC6F5-45113-A0
40N/H	1984-94	3	REC6H4-11181-00	REC6H4-W0001-A1	REC6H4-45113-00
40G	1993	2	REC6R7-11181-A0	REC6R6-W0001-02-00	REC6F5-45113-A0
40X/E40/M/X	1998	2	REC66T-11181-00	REC66T-W0001-01	REC66T-45113-A0
40/E40GMH/JMH	2003	2	REC6F5-11181-A2		REC6F5-45113-A0
40V/C40/EL/TLR/Y-YE	1995	3	REC63D-11181-A1	REC63D-W0001-00	REC6H4-45113-00
E48	2003	2	REC697-11181-A1	REC697-W0001-02	REC696-45113-00
50H/TLR/TR	1995	3	REC63D-11181-A1	REC63D-W0001-00	REC6H4-45113-00
50G/GEO/GETO	1993-02	3	REC6H3-11181-A0	REC6H3-W0001-02	REC6H3-45113-00
50E/D	1984-94	3	REC6H4-11181-00	REC6H4-W0001-A1	REC6H4-45113-00
55B/E55	1990-05	2	REC697-11181-A1	REC697-W0001-02	REC697-45114-00
60FE/T/E60	1984	3	REC6H3-11181-A0	REC6H3-W0001-02	REC6H3-45113-00
70B/ET/CE	1984	3	REC6H3-11181-A0	REC6H3-W0001-02	REC6H3-45113-00
70A/AE/CET	1986	3	REC688-11181-A1	REC688-W0001-A0	REC688-45113-A0
80A/AE	1986	3	REC688-11181-A1	REC688-W0001-A0	REC688-45113-A0
85A/AE	1986	3	REC688-11181-A1	REC688-W0001-A0	REC688-45113-A0
90A/AE/TR	1986	3	REC688-11181-A1	REC688-W0001-A0	REC688-45113-A0
100A	1984	4	REC6E5-11181-A0	REC6E5-W0001-A2	REC6E5-45113-A2
115A/B/E/C/C115T	1984	4	REC6E5-11181-A0	REC6E5-W0001-A2	REC6E5-45113-A2
130B	1984	4	REC6E5-11181-A0	REC6E5-W0001-A2	REC6E5-45113-A2
140A	1984	4	REC6E5-11181-A0	REC6E5-W0001-A2	REC6E5-45113-A2
LZ150/VZ150/Z150	2004-05	6	REC68F-11181-00	REC68F-W0001-01	REC68F-45113-01
150A/E/C/FET	1984-10	6	REC6G5-11181-A2	REC6G5-W0001-A3	REC6G5-45113-A1
VZ175/Z175	2004-10	6	REC68F-11181-00	REC68F-W0001-01	REC68F-45113-01
175D/B/AET	1984-10	6	REC6G5-11181-A2	REC6G5-W0001-A3	REC6G5-45113-A1
LZ200/VZ200/Z200	2004-10	6	REC68F-11181-00	REC68F-W0001-01	REC68F-45113-01
200B/C/AET/GE/FET	1984	6	REC6G5-11181-A2	REC6G5-W0001-A3	REC6G5-45113-A1
225D/BET/AET	1984	6	REC6G5-11181-A2	REC6G5-W0001-A3	REC6G5-45113-A1
225C/G	1990	6	REC61A-11181-A0	REC61A-W0001-01	REC61A-45113-A0
250A/E/B	1990-06	6	REC61A-11181-A0	REC61A-W0001-01	REC61A-45113-A0
Z-LZ250DET/TUR/TR	2003-07	6	REC60V-11181-00		REC60V-45113-02
250TR/FET/HETO	2003-07	6	REC60V-11181-00		REC60V-45113-02
V250TLR/TR	2003	6	REC60V-11181-00		REC60V-45113-02
Z-LZ300	2004-07	6	REC6D0-11181-00	REC6D0-W0001-00	REC60V-45113-02

2T STROKES JUNTAS DE CULATÍN | GASKET, HEAD COVER | GUARNIZIONI COPERCHIO TESTATA | JOINT DE COUVRE CULASSE

REF	OEM
REC6L2-11193-A1	6L2-11193-A1

20D/DM/DEO
25NE/NEMO/NWC/
MSH

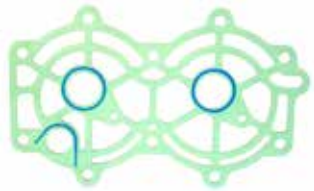

REF	OEM
REC61T-11193-A0	61T-11193-A1

25VE/VM/BMH/B
E25A/BMH
30G/GE/HMH/HW
MSH



new

REF	OEM
REC6H4-11193-A1	6H4-11193-00

25Q (1990-94)
40N/H (1984-91)
50E/D (1984-94)

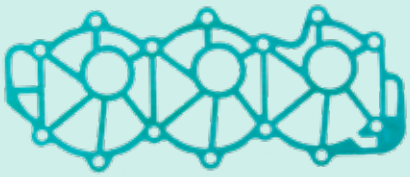

new

REF	OEM
REC63D-11193-A0	63D-11193-A0

50H/T (1995+)
40V/M/Y (1995+)

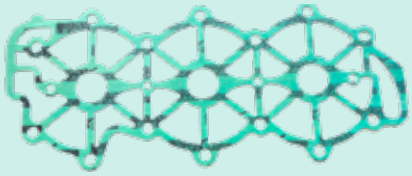

REF	OEM
REC6H3-11193-A1	6H3-11193-A1

25B/BETO
50G/GEO/GETO
60FEO/FETO/FEDO/TLR
E60H/
HMH/MLH
70B//BEO/BEMO/BETO/TR



REF	OEM
REC688-11193-A1	688-11193-A1

75CETO/TLR/AE
E75B
80AEO/AETO/A
85A/AE
90AEO/TLR/A/AETO



REF	OEM
REC66T-11193-A0	66T-11193-A0

40X/E40X
E40 MLH/X/XW

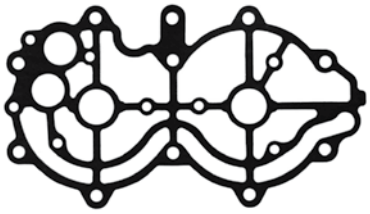

REF	OEM
REC6E5-11193-A0	6E5-11193-A0

100A/AETO/TLR
115B/BETO/BE
C115TLR/CEO/CETO/TXR
E115AEL
130BETO



REF	OEM
REC6E9-11193-A0	6E9-11193-A0

40QE/QE-Z/QM/QWC



REF	OEM
REC68F-11193-02	68F-11193-02

Z150P/TXR/PETO/TR/Q/QETO
Z175G/GETO/TR/TXR/H
Z200N/TXR/PETO/TLR/NETO



REF	OEM
REC6F6-11193-A1	6F6-11193-A1

40GWH/JWH
E40GMH/JMH

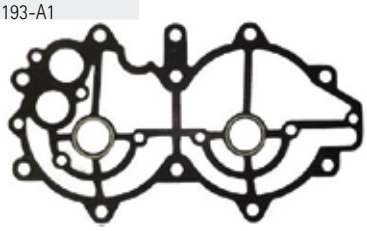

REF	OEM
REC6G5-11193-A0	6G5-11193-A1

150A/AET/CETO/F/FETO/TXR
D150H
175D/DETO/BETO
200AET/CETO/FETO/G/GETO/BETO/TXR/F/TLR,
225D/DET/BET



REF	OEM
REC663-11193-00	663-11193-A0

E48CMH
55BET/B/BE/BM/BET
E55CMH



REF	OEM
REC61A-11193-A2	61A-11193-A2

225C/CETO/G/GETO
250AET/B/TXR



2T STROKES GUÍA CIGÜEÑAL COMPLETO / GUIDE CRANKSHAFT ASSY / GUIDA ALBERO MOTORE COMPLETO / GUIDE VILEBREQUIN COMPLET

2T STROKES		REF
E48CMHS	2003	REC663-11411-00
E55CMH/L/S	2003-05	REC663-11411-00
55B	1993-02	REC663-11411-00
55B E	1990-92	REC663-11411-00
55B EHD	2000	REC663-11411-00
55B ET	1990-98	REC663-11411-00
55B ETL	2001-02	REC663-11411-00
80A/90AETO	1988	REC688-11411-00
100A	1996-01	REC6N7-11411-00
100A A ETO	2000	REC6N7-11411-00
100A ETOL	2001	REC6N7-11411-00
115A	1984-87	REC6E5-11411-00
115B	1985-01	REC6E5-11411-00
115B ETO	1997-00	REC6N7-11411-00
115B ETOL	2001-02	REC6N7-11411-00
115CEO	1990-98	REC6N7-11411-00
115C ETO	1995-01	REC6N7-11411-00
115CETOL/CETOX	2001	REC6N7-11411-00
130BETO	1990-01	REC6N7-11411-00
130BETOL/BETOX	2001	REC6N7-11411-00
L130B	1991-98	REC6N7-11411-00
L130B ETO	2000	REC6N7-11411-00
L130B ETOX	2001	REC6N7-11411-00

2T STROKES		REF
140A	1984-87	REC6E5-11411-00
140B	1988-89	REC6E5-11411-00
L140B	1989	REC6E5-11411-00
150A	1984-89	REC6G5-11411-02
150A ET	1998-00	REC6G5-11411-02
150A ETL/ETX	2001	REC6G5-11411-02
150D ETOL	2001-03	REC6G5-11411-02
150F	1997-98	REC6G5-11411-02
150F ETO	2000	REC6G5-11411-02
150FETOL-X	2002-07	REC6G5-11411-02
150F ETOL	2001-06	REC6G5-11411-02
150F ETOX	2001-06	REC6G5-11411-02
D150H	1999	REC6G5-11411-02
DX150TLRA	2002	REC67H-11411-00
L150A	1988-89	REC6G5-11411-02
L150CETO	1990-95	REC6R3-11411-00
L150F	1997-98	REC6G5-11411-02
L150F ETO	2000	REC6G5-11411-02
L150 FETOL/FETOX	2001	REC6G5-11411-02
SX150TXRA	2002	REC67H-11411-00
175A	1984-89	REC6G5-11411-02
175BETO/ET	1990-95	REC6R3-11411-00
175D	1997-98	REC6G5-11411-02

2T STROKES		REF
175D ETO	2000	REC6G5-11411-02
175D ETOX	2001-02	REC6G5-11411-02
200A	1984-89	REC6G5-11411-02
200AET-L-X	2003	REC6G5-11411-02
200BETO/ETD	1990-95	REC6R3-11411-00
200CETO	1992-93	REC6R3-11411-00
200F	1997-98	REC6G5-11411-02
200F ETO	2000	REC6G5-11411-02
200F ETOL	2001	REC6G5-11411-02
200FETOL-X	2002-10	REC6G5-11411-02
200F ETOX	2001	REC6G5-11411-02
200G	1999	REC6G5-11411-02
200G ETO	2000	REC6G5-11411-02
200G ETOL	2001	REC6G5-11411-02
L200A	1988-91	REC6G5-11411-02
L200BETO/ET	1990-95	REC6R3-11411-00
L200F	1997-98	REC6G5-11411-02
L200F ETO	2000	REC6G5-11411-02
PROV200	1991-95	REC6R3-11411-00
220AET	1984-96	REC6G5-11411-02
225AETO	1987-89	REC6G5-11411-02
225D-DET	1997-01	REC6G5-11411-02

2T STROKES GUÍA PARTES DE CIGÜEÑAL / GUIDE CRANKSHAFT PARTS / GUIDA PARTE ALBERO MOTORE / GUIDE PARTS DE VILEBREQUIN

		1	2	3	4
6B/8B	1980-81	REC677-11412-02	REC677-11422-02	REC677-11432-02	REC677-11442-02
E8D	1996-99	REC677-11412-02	REC677-11422-02	REC677-11432-02	REC677-11442-02
E8D MH	1998-99	REC677-11412-02	REC677-11422-02	REC677-11432-02	REC677-11442-02
9.9D	1985-97	REC682-11412-00	REC682-11422-00	REC682-11432-00	REC682-11442-00
9.9D	1988-95	REC63V-11412-00	REC6K4-11422-00	REC6K4-11432-00	REC682-11442-00
9.9F/MH	1995-14	REC63V-11412-00	REC63V-11422-00	REC63V-11432-00	REC63V-11442-00
9.9F WH	2000	REC63V-11412-00	REC63V-11422-00	REC63V-11432-00	REC63V-11442-00
9.9F WHL/S	2001	REC63V-11412-00	REC63V-11422-00	REC63V-11432-00	REC63V-11442-00
13.5A	1999-06	REC63V-11412-00	REC63V-11422-00	REC63V-11432-00	REC63V-11442-00
15D	1985-87	REC682-11412-00	REC682-11422-00	REC63V-11432-00	REC682-11442-00
15D	1988-95	REC682-11412-00	REC6K4-11422-00	REC6K4-11432-00	REC682-11442-00
15F/MH	1995-14	REC63V-11412-00	REC63V-11412-00	REC63V-11432-00	REC63V-11442-00
E15D	2003	REC63V-11412-00	REC63V-11422-00	REC63V-11432-00	REC63V-11442-00
15F WCL	2001-03	REC63V-11412-00	REC63V-11422-00	REC63V-11432-00	REC63V-11442-00
15 WCS	2001-02	REC63V-11412-00	REC63V-11422-00	REC63V-11432-00	REC63V-11442-00
20C	1981-86	REC6G0-11412-00	REC6G0-11422-00	REC6G0-11432-00	
20C	1996-02		REC6G0-11422-00	REC6G0-11432-00	
20C M	1990-02	REC6G0-11412-00	REC6G0-11422-00	REC6G0-11432-00	
25D	1985-87	REC6G0-11412-00	REC6G0-11422-00	REC6G0-11432-00	
25D M	1990-97	REC6G0-11412-00	REC6G0-11422-00	REC6G0-11432-00	REC6G0-11442-00
25D MH	1998	REC6G0-11412-00	REC6G0-11422-00	REC6G0-11432-00	REC6G0-11442-00
25D MHL/MHS	2001	REC6G0-11412-00	REC6G0-11422-00	REC6G0-11432-00	REC6G0-11442-00
40X/E40X/MH	1998-02	REC66T-11412-00	REC66T-11422-00	REC66T-11432-00	REC66T-11442-00
40X MHL	2001-13	REC66T-11412-00	REC66T-11422-00	REC66T-11432-00	REC66T-11442-00
40X MHS	2001-13	REC66T-11412-00	REC66T-11422-00	REC66T-11432-00	REC66T-11442-00
40X W	2000	REC66T-11412-00	REC66T-11422-00	REC66T-11432-00	REC66T-11442-00
40X WL/WS	2001-03	REC66T-11412-00	REC66T-11422-00	REC66T-11432-00	REC66T-11442-00
40X WT	2000	REC66T-11412-00	REC66T-11422-00	REC66T-11432-00	REC66T-11442-00
40X WTL	2001-03	REC66T-11412-00	REC66T-11422-00	REC66T-11432-00	REC66T-11442-00



GUÍA RODAMIENTOS DE MOTOR — GUIDE ENGINE BEARING — GUIDA CUSCINETTI MOTORE — GUIDE ROULEMENTS DE MOTEUR

		1	2	3	4	5
4A	1985-87	REC93306-304U0		REC93306-304U0	REC93310-112V0	REC93310-418V1
4AC	1987-99	REC93306-304U0		REC93306-304U0	REC93310-112V0	REC93310-418V1
4AC	1999	REC93306-304U0		REC93306-304U0	REC93310-112V0	REC93310-418V1
4AC MHL/MHS	2001-03	REC93306-304U0		REC93306-304U0	REC93310-112V0	REC93310-418V1
4AS	1987-96	REC93306-304U0		REC93306-304U0	REC93310-112V0	REC93310-418V1
4BC	1998-99	REC93306-304U0		REC93306-304U0	REC93310-112V0	REC93310-418V1
4BC	1999	REC93306-304U0		REC93306-304U0	REC93310-112V0	REC93310-418V1
4BC MHL/MHS	2001-03	REC93306-304U0		REC93306-304U0	REC93310-112V0	REC93310-418V1
5C	1985-99	REC93306-304U0		REC93306-304U0	REC93310-112V0	REC93310-418V1
5C MHL/MHS	2001-13	REC93306-304U0		REC93306-304U0	REC93310-112V0	REC93310-418V1
5CS	1987-96	REC93306-304U0		REC93306-304U0	REC93310-112V0	REC93310-418V1
6C	1990	REC93306-204U0	REC93306-204U0	REC93306-204U0	REC93310-112V0	REC93310-418V1
6C	1990-02	REC93306-204U0	REC93306-204U0	REC93306-204U0	REC93310-112V0	REC93310-418V1
6C MHL/MHS	2001-06	REC93306-204U0	REC93306-204U0	REC93306-204U0	REC93310-112V0	REC93310-418V1
6C WHL/WHS	2001	REC93306-204U0	REC93306-204U0	REC93306-204U0	REC93310-112V0	REC93310-418V1
6C	1990	REC93306-204U0	REC93306-204U0	REC93306-204U0	REC93310-112V0	REC93310-418V1
6D	1990-98	REC93306-204U0	REC93306-204U0	REC93306-204U0	REC93310-112V0	REC93310-418V1
6D MHL/MHS	2001-06	REC93306-204U0	REC93306-204U0	REC93306-204U0	REC93310-112V0	REC93310-418V1
6D WHS	2001	REC93306-204U0	REC93306-204U0	REC93306-204U0	REC93310-112V0	REC93310-418V1
8C	1987-02	REC93306-204U0	REC93306-204U0	REC93306-204U0	REC93310-112V0	REC93310-418V1
8C MHL/MHS	2001-12	REC93306-204U0	REC93306-204U0	REC93306-204U0	REC93310-112V0	REC93310-418V1
8C MHX/WHL	2001-03	REC93306-204U0	REC93306-204U0	REC93306-204U0	REC93310-112V0	REC93310-418V1
E8D/MH	1996-99	REC93306-204U0	REC93306-204U0	REC93306-204U0	REC93602-14118	REC93310-418U0
9.9D	1985-89	REC93306-205U2	REC93304-205U0	REC93306-304U0	REC93602-14104	REC93310-620V5
9.9D	1985-95	REC93306-205U2	REC93304-205U0	REC93306-304U0	REC93602-14104	REC93310-620V5
9.9D	1990-95	REC93306-205U2	REC93304-205U0	REC93306-304U0	REC93602-14104	
9.9F	1995-99	REC93306-205U7	REC93306-205U7	REC93306-205U7	REC93602-14104	REC93310-620V5
9.9F MH	2000	REC93306-205U7	REC93306-205U7	REC93306-205U7	REC93602-14104	REC93310-620V5
9.9F MHL/MHS	2001-06	REC93306-205U7	REC93306-205U7	REC93306-205U7	REC93602-14104	
9.9F WC/WH	2000	REC93306-205U7	REC93306-205U7	REC93306-205U7	REC93602-14104	REC93310-620V5
9.9F WHL/WHS	2001	REC93306-205U7	REC93306-205U7	REC93306-205U7	REC93602-14104	REC93310-620V5
13.5A	1999	REC93306-205U7	REC93306-205U7	REC93306-205U7	REC93602-14104	REC93310-620V5
13.5A MH	2000	REC93306-205U7	REC93306-205U7	REC93306-205U7	REC93602-14104	REC93310-620V5
13.5A MHL/MHS	2001-04	REC93306-205U7	REC93306-205U7	REC93306-205U7	REC93602-14104	REC93310-620V5
13.5A WH	2000	REC93306-205U7	REC93306-205U7	REC93306-205U7	REC93602-14104	REC93310-620V5
15D	1985-89	REC93306-205U2	REC93304-205U0	REC93306-304U0	REC93602-14104	REC93310-620V5
15D	1985	REC93306-205U2	REC93304-205U0	REC93306-304U0	REC93602-14104	REC93310-620V5
15D	1990-95	REC93306-205U2	REC93304-205U0	REC93306-304U0	REC93602-14104	REC93310-620V5
15F	1995-99	REC93306-205U7	REC93306-205U7	REC93306-205U7	REC93602-14104	REC93310-620V5
15F MH	2000	REC93306-205U7	REC93306-205U7	REC93306-205U7	REC93602-14104	REC93310-620V5
15F MHL/MHS	2001-06	REC93306-205U7	REC93306-205U7	REC93306-205U7	REC93602-14104	REC93310-620V5
15F WC	2000	REC93306-205U7	REC93306-205U7	REC93306-205U7	REC93602-14104	REC93310-620V5
15F WCL/WCS	2001-03	REC93306-205U7	REC93306-205U7	REC93306-205U7	REC93602-14104	REC93310-620V5
20C	1985	REC93306-30510		REC93306-30510	REC93602-20M02	REC93310-522W0
20C	1986-93	REC93306-30510		REC93306-30510	REC93602-20M02	REC93310-522W0
20C	1993	REC93306-305U3		REC93306-305U3	REC93602-20M02	REC93310-522W0
20C M	1990-97	REC93306-305U3		REC93306-305U3	REC93602-20M02	REC93310-522W0
20C MH	1998	REC93306-305U3		REC93306-305U3	REC93602-20M02	REC93310-522W0
20C MHL/MHS	2001-02	REC93306-305U3		REC93306-305U3	REC93602-20M02	REC93310-522W0
20DEM	1994-98	REC93311-632U7	REC93306-305U3	REC93306-305U3		
20D MHOL/ MHOS	2001-06	REC93311-632U7	REC93306-305U3	REC93306-305U3		
20D WOL/WOS	2006	REC93311-632U7	REC93306-305U3	REC93306-305U3		
25B	1994-95	REC93311-636U6		REC93306-306V1	REC93603-18M09	REC93603-18M09
25B MHL/MHS	2001-06	REC93399-99951		REC93306-305U3	REC93602-20M02	
25B WCS	2001-02	REC93399-99951		REC93306-305U3	REC93602-20M02	
25D	1985	REC93306-30510		REC93306-30510	REC93602-20M02	REC93310-522W0
25D	1986-87	REC93306-30510		REC93306-30510	REC93602-20M02	REC93310-522W0
25D M	1990-97	REC93311-632U7	REC93306-305U3	REC93306-305U3	REC93602-20M02	REC93310-522W0
25D MH	1998	REC93311-632U7	REC93306-305U3	REC93306-305U3		REC93310-522W0
25D MHL/MHS	2001	REC93311-632U7	REC93306-305U3	REC93306-305U3	REC93602-20M02	REC93310-522W0
25J	1987-2000			REC93306-305U3		
25J	1992-2000	REC93311-632U7		REC93306-305U3		
25N	1994-98	REC93311-632U7	REC93306-305U3	REC93306-305U3		
25N MHOL/ MHOS	2001-06	REC93311-632U7	REC93306-305U3	REC93306-305U3		
25N WOL/WOS	2001-03	REC93311-632U7	REC93306-305U3	REC93306-305U3		
25V	1996	REC93311-632U7	REC93306-305U3	REC93306-305U3	REC93602-20M02	
25V	1997-98	REC93311-632V4	REC93306-305U3	REC93306-305U3	REC93602-20M02	REC93310-624U5
25V MHL/MHS	2001	REC93311-632V4	REC93306-305U3	REC93306-305U3	REC93602-20M02	REC93310-624U5
25V WCS	2001	REC93311-632V4	REC93306-305U3	REC93306-305U3	REC93602-20M02	REC93310-624U5
30A	1985			REC93306-30510	REC93602-20M02	REC93310-624U5
30A M	1990-92			REC93306-305U3	REC93602-20M02	REC93310-624U5
30D	1986-99			REC93306-305U3		
30D	1992-00	REC93311-632U7		REC93306-305U3		
30D EOL/ETOL	2001-06	REC93311-632U7		REC93306-305U3		
30D MHOL/ MHOS	2001-06	REC93311-632U7		REC93306-305U3		
30D OL	2001-03	REC93311-632U7		REC93306-305U3		
30D EOS	2001-06	REC93311-632U7		REC93306-305U3		
30G	1996	REC93311-632U7		REC93306-305U3	REC93602-20M02	REC93310-624U5

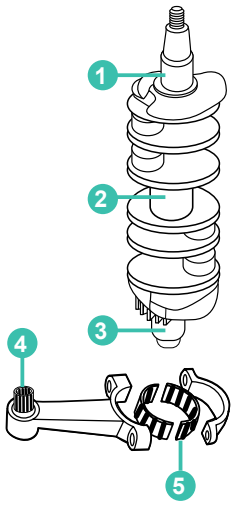

		1	2	3	4	5
30G	1996-98	REC93311-632V4		REC93306-305U3	REC93602-20M02	REC93310-624U5
30G MHS/WCS	2001	REC93311-632V4		REC93306-305U3	REC93602-20M02	REC93310-624U5
30H MHS	2001-03	REC93311-632V4		REC93306-305U3	REC93602-20M02	REC93310-624U5
30H WCS	2001-02	REC93311-632V4		REC93306-305U3	REC93602-20M02	
40H	1984-87	REC93306-305U8		REC93306-30510	REC93602-20M02	
40Q	1993-98		REC93311-832U4		REC93603-21111	REC93310-730V6
40Q E/M	1992		REC93311-832U4		REC93603-21111	REC93310-730V6
40R MHO	2000				REC93602-20M02	
40R ROS	2001				REC93602-20M02	
40V	1994-99	REC93306-305U8		REC93306-305U8	REC93602-20M02	
40V EO	2000	REC93306-305U8		REC93306-305U8	REC93602-20M02	
40V EOL/EOS	2001-06	REC93306-305U8		REC93306-305U8	REC93602-20M02	
40V ETO	2000	REC93306-305U8		REC93306-305U8	REC93602-20M02	
40V ETOL/ETOS	2001-03	REC93306-305U8		REC93306-305U8	REC93602-20M02	
40V MHOL/ MHOS	2001-06	REC93306-305U8		REC93306-305U8	REC93602-20M02	
40V MO	2000	REC93306-305U8		REC93306-305U8	REC93602-20M02	
40V MOS	2002-05	REC93306-305U8		REC93306-305U8	REC93602-20M02	
40X	1998	REC93306-307U0	REC93332-000UE	REC93306-306V5	REC93603-21111	REC93310-727U0
40X MH	2000	REC93306-307U0	REC93332-000UE	REC93306-306V5	REC93603-21111	REC93310-727U0
40X MHL	2001-06	REC93306-307U0	REC93332-000UE	REC93306-306V5	REC93603-21111	REC93310-727U0
40X WL/WS	2001	REC93306-307U0	REC93332-000UE	REC93306-306V5	REC93603-21111	REC93310-727U0
40X WT	2000	REC93306-307U0	REC93332-000UE	REC93306-306V5	REC93603-21111	REC93310-727U0
40X WTL	2001-03	REC93306-307U0	REC93332-000UE	REC93306-306V5	REC93603-21111	REC93310-727U0
40Y ETOL	2001-06	REC93306-305U8		REC93306-305U8	REC93602-20M02	
40Y MHOS	2001-06	REC93306-305U8		REC93306-305U8	REC93602-20M02	
E40G	2003	REC93306-307U0	REC93332-000UE	REC93306-306V1	REC93603-21111	REC93310-727V7
E40J	2003	REC93306-307U0	REC93332-000UE	REC93306-306V1	REC93603-21111	REC93310-727V7
50D	1984-90	REC93306-305U8		REC93306-30510	REC93602-20M02	
50G	1993-98	REC93311-636U6		REC93306-306V1	REC93603-18M09	REC93310-522W0
50G ETO	2000	REC93311-636U6		REC93306-306V1	REC93603-18M09	REC93310-522W0
50G ETOL	2001-06	REC93311-636U6		REC93306-306V1	REC93603-18M09	REC93310-522W0
50H	1994-99	REC93306-305U8		REC93306-305U8	REC93602-20M02	REC93310-522W0
50H EDO	2000	REC93306-305U8		REC93306-305U8	REC93602-20M02	REC93310-522W0
50H EDOL/EDOS	2001-02	REC93306-305U8		REC93306-305U8	REC93602-20M02	REC93310-522W0
50H MDO/MO	2000	REC93306-305U8		REC93306-305U8	REC93602-20M02	REC93310-522W0
55B	1993-98	REC93311-632U1			REC93603-21111	REC93311-832U4
55B E	1990-00	REC93311-632U1	REC93311-832U4		REC93603-21111	REC93311-832U4
55B EHD/ET	2000	REC93311-632U1	REC93311-832U4		REC93603-21111	REC93311-832U4
55B ETL	2001-02	REC93311-632U1	REC93311-832U4		REC93603-21111	REC93311-832U4
60F	1984-98	REC93311-636U6		REC93306-306V1	REC93603-18M09	
60F EO/ETO	2000	REC93311-636U6		REC93306-306V1	REC93603-18M09	
60F ETOL	2001-06	REC93311-636U6		REC93306-306V1	REC93603-18M09	
E60HMHD	2003	REC93311-636U6		REC93306-306V1		REC93310-527W1
E60 ELHB	2003	REC93311-636U6		REC93306-306V1		REC93310-527W1
E60H MHDL	2001-06	REC93311-636U6		REC93306-306V1	REC93603-18M09	
70B	1984-98	REC93311-636U6		REC93306-306V1	REC93603-18M09	
70B EDOL	2001	REC93311-636U6		REC93306-306V1	REC93603-18M09	
70B EO/ETO	2000	REC93311-636U6		REC93306-306V1	REC93603-18M09	
70B ETOL	2001-06	REC93311-636U6		REC93306-306V1	REC93603-18M09	
75A	1993-98	REC93310-636U4	REC93310-835U8	REC93306-206U5	REC93603-21111	REC93310-730V8
75A E	1990-00	REC93310-636U4	REC93310-835U8	REC93306-206U5	REC93603-21111	REC93310-730V8
75A EDL	2001-06	REC93310-636U4	REC93310-835U8	REC93306-206U5	REC93603-21111	REC93310-730V8
75A EM	1992	REC93310-636U4	REC93310-835U8	REC93306-206U5	REC93603-21111	REC93310-730V8
75A ET/ETL	2000	REC93310-636U4	REC93310-835U8	REC93306-206U5	REC93603-21111	REC93310-730V8
75A MHD	2000	REC93310-636U4	REC93310-835U8	REC93306-206U5	REC93603-21111	REC93310-730V8
75C	1998	REC93310-636U4	REC93310-835U8	REC93306-206U5	REC93603-21111	REC93310-730V8
75C ETO	2000	REC93310-636U4	REC93310-835U8	REC93306-206U5	REC93603-21111	REC93310-730V8
75C ETOL	2001-06	REC93310-636U4	REC93310-835U8	REC93306-206U5	REC93603-21111	REC93310-730V8
80A	1985-95	REC93310-636U4	REC93310-835U8	REC93306-206U5	REC93603-21111	REC93310-730V8
85A	1996-98	REC93310-636U4	REC93310-835U8	REC93306-206U5	REC93603-21111	REC93310-730V8
85A E	1990-2000	REC93310-636U4	REC93310-835U8	REC93306-206U5	REC93603-21111	REC93310-730V8
85A ET/ETL	2000	REC93310-636U4	REC93310-835U8	REC93306-206U5	REC93603-21111	REC93310-730V8
90A	1984-98	REC93310-636U4	REC93310-835U8	REC93306-206U5	REC93603-21111	REC93310-730V8
90A ETO/ETOL	2000	REC93310-636U4	REC93310-835U8	REC93306-206U5	REC93603-21111	REC93310-730V8
100A	1998	REC93311-940U3	REC93310-954U1	REC93306-208U0	REC93310-32337	REC93310-836V2
100A ETO	2000	REC93311-940U3	REC93310-954U1	REC93306-208U0	REC93310-32337	REC93310-836V2
100A ETOL	2001	REC93311-940U3	REC93310-954U1	REC93306-208U0	REC93310-32337	REC93310-836V2
115A	1984-87	REC93311-940U3	REC93310-954V3	REC93306-208U0	REC93603-21111	REC93310-836V2
115B	1988-92	REC93311-940U3	REC93310-954V3	REC93306-208U0	REC93603-21111	REC93310-836V2
115B	1993-96	REC93311-940U3	REC93310-954V3	REC93306-208U0	REC93310-32337	REC93310-836V2
115B ETOL	2001-02	REC93311-940U3	REC93310-954U1	REC93306-208U0	REC93310-32337	REC93310-836U0
115C	1988-91	REC93311-940U3	REC93310-954V3	REC93306-208U0	REC93603-21111	REC93310-836V2
115C	1992-98	REC93311-940U3	REC93310-954V3	REC93306-208U0	REC93310-32337	REC93310-836V2
115C ETO	2000	REC93311-940U3	REC93310-954U1	REC93306-208U0	REC93310-32337	REC93310-836V2
115C ETOL	2001	REC93311-940U3	REC93310-954U1	REC93306-208U0	REC93310-32337	REC93310-836U0
115C ETOX	1988-91	REC93311-940U3	REC93310-954U1	REC93306-208U0	REC93310-32337	REC93310-836V2
130B	1992-98	REC93311-940U3	REC93310-954V3	REC93306-208U0	REC93603-21111	REC93310-836V2
130B	2001-06	REC93311-940U3	REC93310-954V3	REC93306-208U0	REC93310-32337	REC93310-836V2
130B ETO	2000-2005	REC93306-307U0	REC93332-000UE	REC93306-208U0	REC93603-21111	REC93310-836V2
130B ETOL	2001-06	REC93311-940U3	REC93310-954U1	REC93306-208U0	REC93310-32337	REC93310-836V2
130B ETOX	2001	REC93311-940U3	REC93310-954U1	REC93306-208U0	REC93310-32337	REC93310-836U0
L130B	1988-91	REC93311-940U3	REC93310-954U1	REC93306-208U0	REC93310-32337	REC93310-836V2
L130B	1992-98	REC93311-940U3	REC93310-954U1	REC93306-208U0	REC93603-21111	REC93310-836V2

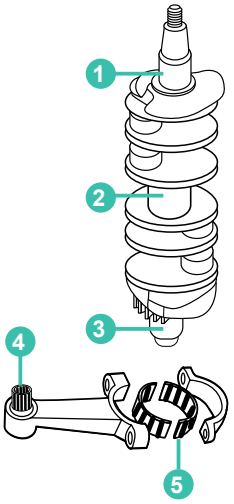

		1	2	3	4	5
L130B ETO	2000	REC93311-940U3	REC93310-954U1	REC93306-208U0	REC93310-32337	REC93310-836V2
L130B ETO	2001	REC93311-940U3	REC93310-954U1	REC93306-208U0	REC93310-32337	REC93310-836V2
140A	1984-89	REC93311-940U3	REC93310-954U1	REC93306-208U0	REC93310-32337	REC93310-836V2
140B	1988-89	REC93311-940U3	REC93310-954V3	REC93306-208U0	REC93603-21111	REC93310-836V2
L140B	1989	REC93311-940U3	REC93310-954V3	REC93306-208U0	REC93603-21111	REC93310-836V2
150A	1984-89	REC93311-940U3	REC93310-954V3	REC93306-208U0	REC93603-21111	REC93310-836V2
150A ET	1998-00	REC93311-940U3	REC93310-954V3	REC93306-208U0	REC93603-21111	REC93310-836V2
150A ETL	2001-02	REC93311-940U3	REC93310-954U1	REC93306-208U0	REC93310-32337	REC93310-836V2
150A ETX	2001-02	REC93311-940U3	REC93310-954U1	REC93306-208U0	REC93310-32337	REC93310-836V2
L150C	1988-91	REC93311-940U3	REC93310-954U1	REC93306-208U0	REC93310-32337	REC93310-836V2
150C	1988-91	REC93311-940U3	REC93310-954V3	REC93306-208U0	REC93603-21111	REC93310-836V2
150C	1992-95	REC93311-940U3	REC93310-954V3	REC93306-208U0	REC93603-21111	REC93310-836V2
150F	1996-98	REC93311-940U3	REC93310-954V3	REC93306-208U0	REC93310-32337	REC93310-836V2
150F ETO	2000	REC93311-940U3	REC93310-954U1	REC93306-208U0	REC93310-32337	REC93310-836V2
150F ETOL	2001-06	REC93311-940U3	REC93310-954U1	REC93306-208U0	REC93310-32337	REC93310-836V2
150F ETOX	2001-06	REC93311-940U3	REC93310-954U1	REC93306-208U0	REC93310-32337	REC93310-836V2
D150H	1999	REC93311-940U3	REC93310-954U1	REC93306-208U0	REC93310-32337	REC93310-836V2
D150HETO	2001-02	REC93311-940U3	REC93310-954U1	REC93306-208U0	REC93310-32337	REC93310-836V2
L150A	1988-89	REC93311-940U3	REC93310-954U1	REC93306-208U0	REC93310-32337	REC93310-836V2
L150C	1990-95	REC93311-940U3	REC93310-954V3	REC93306-208U0	REC93603-21111	REC93310-836V2
L150F	1996-98	REC93311-940U3	REC93310-954V3	REC93306-208U0	REC93310-32337	REC93310-836V2
L150F ETO	2000	REC93311-940U3	REC93310-954U1	REC93306-208U0	REC93310-32337	REC93310-836V2
L150F ETOL	2001	REC93311-940U3	REC93310-954U1	REC93306-208U0	REC93310-32337	REC93310-836V2
L150 EOTX	2001	REC93311-940U3	REC93310-954U1	REC93306-208U0	REC93310-32337	REC93310-836V2
LZ150PETO	2000-06	REC93311-940U3	REC93310-954U1	REC93306-208U0	REC93310-32337	REC93310-836V2
Z150P ETO	2000	REC93311-940U3	REC93310-954U1	REC93306-208U0	REC93310-32337	REC93310-836U0
Z150P ETO	2001-06	REC93311-940U3	REC93310-954U1	REC93306-208U0	REC93310-32337	REC93310-836U0
Z150Q ETO	2000	REC93311-940U3	REC93310-954U1	REC93306-208U0	REC93310-32337	REC93310-836U0
Z150Q ETOL	2001-06	REC93311-940U3	REC93310-954U1	REC93306-208U0	REC93310-32337	REC93310-836U0
175A	1984-89	REC93311-940U3	REC93310-954U1	REC93306-208U0	REC93310-32337	REC93310-836U0
175B	1978-95	REC93311-940U3	REC93310-954V3	REC93306-208U0	REC93603-21111	REC93310-836V2
175D	1996-98	REC93311-940U3	REC93310-954V3	REC93306-208U0	REC93310-32337	REC93310-836V2
175D ETO/ETOL	2000	REC93311-940U3	REC93310-954U1	REC93306-208U0	REC93310-32337	REC93310-836V2
175D ETOX/ETOL	2001-02	REC93311-940U3	REC93310-954U1	REC93306-208U0	REC93310-32337	REC93310-836V2
175D ETOL	2001	REC93311-940U3	REC93310-954U1	REC93306-208U0	REC93310-32337	REC93310-836V2
Z175G ETOX	2001-06	REC93311-940U3	REC93310-954U1	REC93306-208U0	REC93310-32337	REC93310-836U0
200A	1984-89	REC93311-940U3	REC93310-954U1	REC93306-208U0	REC93310-32337	REC93310-836U0
200B	1990-95	REC93311-940U3	REC93310-954V3	REC93306-208U0	REC93603-21111	REC93310-836V2
200F	1996-98	REC93311-940U3	REC93310-954V3	REC93306-208U0	REC93310-32337	REC93310-836V2
200F ETO/ETOL	2000	REC93311-940U3	REC93310-954U1	REC93306-208U0	REC93310-32337	REC93310-836V2
200F ETOX	2001-06	REC93311-940U3	REC93310-954U1	REC93306-208U0	REC93310-32337	REC93310-836V2
200G	1999-02	REC93311-940U3	REC93310-954U1	REC93306-208U0	REC93310-32337	REC93310-836V2
200G ETO/ETOL	2000	REC93311-940U3	REC93310-954U1	REC93306-208U0	REC93310-32337	REC93310-836V2
L200A	1988-91	REC93311-940U3	REC93310-954U1	REC93306-208U0	REC93310-32337	REC93310-836V2
L200B	1992-95	REC93311-940U3	REC93310-954V3	REC93306-208U0	REC93603-21111	REC93310-836V2
L200F	1996-98	REC93311-940U3	REC93310-954V3	REC93306-208U0	REC93310-32337	REC93310-836V2
L200F ETO/ETOL	2000	REC93311-940U3	REC93310-954U1	REC93306-208U0	REC93310-32337	REC93310-836V2
LZ200N ETO	2000	REC93311-940U3	REC93310-954U1	REC93306-208U0	REC93310-32337	REC93310-836V2
LZ200NETO		REC93311-940U3	REC93310-954U1	REC93306-208U0	REC93310-32337	REC93310-836U0
Z200N ETO	2001-06	REC93311-940U3	REC93310-954U1	REC93306-208U0	REC93310-32337	REC93310-836U0
Z200 N ETOL	2000	REC93311-940U3	REC93310-954U1	REC93306-208U0	REC93310-32337	REC93310-836U0
Z200N ETOX/ ETOL	2001-06	REC93311-940U3	REC93310-954U1	REC93306-208U0	REC93310-32337	REC93310-836U0
220A	2003-06	REC93311-940U3	REC93310-954U1	REC93306-208U0	REC93310-32337	REC93310-836U0
225A	1984-86	REC93311-940U3	REC93310-954V3	REC93306-208U0	REC93603-21111	REC93310-836V2
225A	1987-89	REC93311-940U3	REC93310-954V3	REC93306-208U0	REC93603-21111	REC93310-836V2
225D ETO	2000	REC93311-940U3	REC93310-954U1	REC93306-208U0	REC93310-32337	REC93310-836V2
225D ETOL/ETOX	2001-03	REC93311-940U3	REC93310-954U1	REC93306-208U0	REC93310-32337	REC93310-836V2
250AET	1996-06				REC93310-326V4	
250B	95-02				REC93310-326V4	
225G	99-03				REC93310-326V4	
225A	1984-86	REC93311-940U3	REC93310-954V3	REC93306-208U0	REC93603-21111	REC93310-836V2
225A	1987-89	REC93311-940U3	REC93310-954V3	REC93306-208U0	REC93603-21111	REC93310-836V2
225D ETO	2000	REC93311-940U3	REC93310-954U1	REC93306-208U0	REC93310-32337	REC93310-836V2
225D ETOL/ETOX	2001-03	REC93311-940U3	REC93310-954U1	REC93306-208U0	REC93310-32337	REC93310-836V2
250AET	1996-06				REC93310-326V4	
250B	95-02				REC93310-326V4	
225G	99-03				REC93310-326V4	
Z, LZ 225/250/300 HP V6	1990-10	REC93306-209U1				

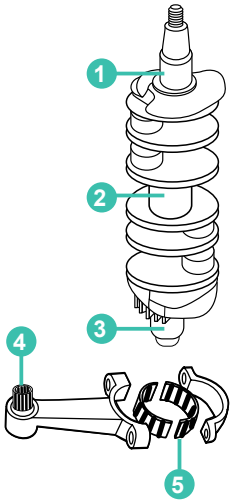

GUÍA DE BIELAS — GUIDE CONNECTING ROAD — GUIDA BIELLE — GUIDE DE BIELLES

		1	2	3	4	5
2B	1986-02	REC646-11651-02			REC646-11681-00	REC90209-18112
2MSHA/S/B	2002-03	REC646-11651-02			REC646-11681-00	
2CMHS	2010	REC646-11651-02			REC646-11681-00	
4A	1985-87	REC6E0-11651-01	REC6G1-11633-00		REC6G1-11681-00	
4AC	1987-99	REC6E0-11651-01	REC6G1-11633-00		REC6G1-11681-00	REC90209-18112
4AC MHL/HS	2001-03	REC6E0-11651-01	REC6G1-11633-00		REC6G1-11681-00	REC90209-18112
4AS	1987-96	REC6E0-11651-01	REC6G1-11633-00		REC6G1-11681-00	REC90209-18112
4BC	1998-99	REC6E0-11651-01	REC6G1-11633-00		REC6G1-11681-00	REC90209-18112
4BC	1999	REC6E0-11651-01	REC6G1-11633-00		REC6G1-11681-00	REC90209-18112
4BC MHL/HS	2001-03	REC6E0-11651-01	REC6G1-11633-00		REC6G1-11681-00	REC90209-18112
5C	1985-99	REC6E0-11651-01	REC6G1-11633-00		REC6G1-11681-00	REC90209-18112
5C MHL/MHS	2001-06	REC6E0-11651-01	REC6G1-11633-00	REC90201-12565	REC6G1-11681-00	REC90209-18112
5CS	1987-96	REC650-11651-04	REC634-11633-00	REC90201-14377	REC682-11681-00	REC90209-20159
6C	1990		REC634-11633-00	REC90201-14377	REC682-11681-00	REC90209-20159
6C	1990-98		REC634-11633-00	REC90201-14377	REC682-11681-00	REC90209-20159
6C MHL/HS	2001-06		REC634-11633-00	REC90201-14377	REC682-11681-00	REC90209-18112
6C WHL/HS	2001		REC634-11633-00	REC90201-14377	REC682-11681-00	REC90209-18112
6C	1990		REC634-11633-00	REC90201-14377	REC682-11681-00	REC90209-18112
6D	1990-98		REC634-11633-00	REC90201-14377	REC682-11681-00	REC90209-18112
6D MHL/HS	2001-06		REC634-11633-00	REC90201-14377	REC682-11681-00	
6D WHS	2001		REC634-11633-00	REC90201-14377	REC682-11681-00	REC90209-18112
8C	1990-98	REC677-11651-00	REC634-11633-00	REC90201-14377	REC682-11681-00	REC90209-18112
8C	1990	REC677-11651-00	REC634-11633-00	REC90201-14377	REC682-11681-00	REC90209-18112
8C MHL/HS	2001-06	REC677-11651-00	REC634-11633-00	REC90201-14377	REC682-11681-00	REC90209-20159
8C MHX	2001-03	REC677-11651-00	REC634-11633-00	REC90201-14377	REC682-11681-00	REC90209-20159
8C WHL7HS	2001-02	REC677-11651-00	REC634-11633-00	REC90201-14377	REC682-11681-00	REC90209-20159
E8D	1997-98	REC6E0-11651-01	REC634-11633-00	REC90201-14377	REC682-11681-00	REC90209-18112
E8D MH	1999	REC6E0-11651-01	REC634-11633-00	REC90201-14377	REC682-11681-00	REC90209-18112
9.9D	1985-89	REC650-11651-04	REC634-11633-00	REC90201-14377	REC682-11681-00	
9.9D	1985-95	REC6K4-11651-00	REC634-11633-00	REC90201-14377	REC682-11681-00	
9.9D	1990-95	REC6K4-11651-00	REC634-11633-00	REC90201-14377	REC648-11681-00	REC90209-20159
9.9F	1995-99	REC648-11651-00	REC648-11633-00	REC90201-14377	REC682-11681-00	REC90209-20159
9.9F MH	2000	REC648-11651-00	REC648-11633-00	REC90201-14377	REC682-11681-00	REC90209-20159
9.9F MHL	2001-06	REC648-11651-00	REC648-11633-00	REC90201-14377	REC682-11681-00	REC90209-20159
9.9F MHS	2001-06	REC648-11651-00	REC648-11633-00	REC90201-14377	REC682-11681-00	REC90209-20159
9.9F WC	2000	REC648-11651-00	REC648-11633-00	REC90201-20M27	REC682-11681-00	
9.9F WH	2000	REC689-11651-00	REC689-11633-00	REC90201-20M27	REC689-11681-00	REC90209-24M03
9.9F WHL/HS	2001	REC689-11651-00	REC689-11633-00	REC90201-20M27	REC689-11681-00	REC90209-24M03
13.5A	1999	REC689-11651-00	REC689-11633-00	REC90201-20M27	REC689-11681-00	REC90209-24M03
13.5A MH	2000	REC689-11651-00	REC689-11633-00	REC90201-20M27	REC689-11681-00	REC90209-24M03
13.5A MHL	2001-04	REC689-11651-00	REC689-11633-00	REC90201-20M27	REC689-11681-00	REC90209-24M03
13.5A MHS	2001-04	REC689-11651-00	REC648-11633-00	REC90201-14377	REC648-11681-00	
13.5A WH	2000	REC648-11651-00	REC648-11633-00	REC90201-14377	REC648-11681-00	
15D	1985-89	REC648-11651-00	REC648-11633-00	REC90201-14377	REC648-11681-00	
15D	1985-95	REC648-11651-00	REC648-11633-00	REC90201-14377	REC648-11681-00	
15D	1990-95	REC648-11651-00	REC648-11633-00	REC90201-14377	REC648-11681-00	
15F	1995-99	REC648-11651-00	REC689-11633-00	REC90201-20M27	REC689-11681-00	REC90209-24M03
15F MH	2000	REC689-11651-00	REC689-11633-00	REC90201-20M27	REC689-11681-00	REC90209-24M03
15F MHL/HS	2001-06	REC689-11651-00	REC689-11633-00	REC90201-20M27	REC689-11681-00	REC90209-24M03
13.5A MH	2000	REC689-11651-00	REC689-11633-00	REC90201-20M27	REC689-11681-00	REC90209-24M03
13.5A MHL	2001-04	REC689-11651-00	REC689-11633-00	REC90201-20M27	REC689-11681-00	REC90209-24M03
13.5A MHS	2001-04	REC689-11651-00	REC648-11633-00	REC90201-14377	REC648-11681-00	
13.5A WH	2000	REC648-11651-00	REC648-11633-00	REC90201-14377	REC648-11681-00	
15D	1985-89	REC648-11651-00	REC648-11633-00	REC90201-14377	REC648-11681-00	
15D	1985-95	REC648-11651-00	REC648-11633-00	REC90201-14377	REC648-11681-00	
15D	1990-95	REC648-11651-00	REC648-11633-00	REC90201-14377	REC648-11681-00	
15F	1995-99	REC648-11651-00	REC689-11633-00	REC90201-20M27	REC689-11681-00	REC90209-24M03
15F MH	2000	REC689-11651-00	REC689-11633-00	REC90201-20M27	REC689-11681-00	REC90209-24M03
15F MHL/HS	2001-06	REC689-11651-00	REC689-11633-00	REC90201-20M27	REC689-11681-00	REC90209-24M03
15F WC	2000	REC689-11651-00	REC689-11633-00	REC90201-20M27	REC689-11681-00	REC90209-24M03
15F WCL	2001-03	REC689-11651-00	REC689-11633-00	REC90201-20M27	REC689-11681-00	REC90209-24M03
15F WCS	2001-02	REC689-11651-00	REC689-11633-00	REC90201-20M27	REC689-11681-00	REC90209-24M03
20C	1985-93	REC689-11651-00	REC689-11633-00	REC90201-20M27	REC689-11681-00	REC90209-24M03
20C	1986-02	REC648-11651-00	REC648-11633-00	REC90201-20417	REC648-11681-00	
20C	1993	REC6F5-11651-00	REC6F5-11633-00	REC90201-20417	REC66T-11681-00	REC90209-27M07
20C M	1990-97	REC6F5-11651-00	REC6F5-11633-00	REC90201-20417	REC66T-11681-00	REC90209-27M07
20C MH	1998	REC6F5-11651-00	REC6F5-11633-00	REC90201-20417	REC66T-11681-00	REC90209-27M07
20C MHL	2001-02	REC6F5-11651-00	REC6F5-11633-00	REC90201-20417	REC66T-11681-00	REC90209-27M07
20C MHS	2001-02	REC6F5-11651-00	REC6F5-11633-00	REC90201-20417	REC66T-11681-00	REC90209-27M07
20D	1994-98	REC6F5-11651-00	REC6F5-11633-00	REC90201-20417	REC66T-11681-00	REC90209-27M07
20D MHOL	2001-06	REC6F5-11651-00	REC6F5-11633-00	REC90201-20417	REC66T-11681-00	REC90209-27M07
20D MHOS	2001-06	REC6F5-11651-00	REC6F5-11633-00	REC90201-20417	REC66T-11681-00	REC90209-27M07
20D WOL/OS	2006	REC6F5-11651-00	REC6F5-11633-00	REC90201-20417	REC66T-11681-00	REC90209-27M07
25B	1994-02	REC689-11651-00	REC663-11633-00	REC90201-20417	REC689-11681-00	REC90209-24M03
25B MHL/HS	2001-06	REC689-11651-00	REC663-11633-00	REC90201-20417	REC689-11681-00	REC90209-24M03
25B WCS	2001-02	REC689-11651-00	REC663-11633-00	REC90201-20417	REC689-11681-00	REC90209-24M03
25D	1985-01	REC648-11651-00	REC663-11633-00	REC90201-20417	REC648-11681-00	
25D	1986-87	REC648-11651-00	REC663-11633-00	REC90201-20417	REC648-11681-00	
25D M	1990-97	REC648-11651-00	REC663-11633-00	REC90201-20417		
25D MH	1998	REC648-11651-00				
25D MHL	2001	REC648-11651-00				

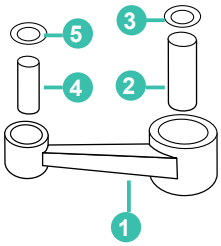

		1	2	3	4	5
25D MHS	2001	REC648-11651-00				
25N	1994-98		REC6H3-11633-00	REC90201-20417		
25N MHOL/S	2001-06	REC689-11651-00	REC663-11633-00	REC90201-20417		
25N WOL/WOS	2001-03	REC689-11651-00	REC663-11633-00	REC90201-20417		
25V	1996-98	REC689-11651-00	REC663-11633-00	REC90201-20417	REC689-11681-00	REC90209-24M03
25V MHL/HS	2001	REC689-11651-00	REC663-11633-00	REC90201-20417	REC689-11681-00	REC90209-24M03
25V WCS	2001	REC689-11651-00	REC663-11633-00	REC90201-20417	REC689-11681-00	REC90209-24M03
30A	1985	REC689-11651-00	REC663-11633-00	REC90201-20417	REC689-11681-00	REC90209-24M03
30A M	1990-92	REC689-11651-00	REC663-11633-00	REC90201-20417	REC689-11681-00	REC90209-24M03
30D	1986-00	REC689-11651-00	REC663-11633-00	REC90201-20417		
30D EOL/EOS	2001-06	REC689-11651-00	REC663-11633-00	REC90201-20417		
30D ETOL	2001-06	REC689-11651-00	REC663-11633-00	REC90201-20417		
30D MHOL	2001-06	REC689-11651-00	REC663-11633-00	REC90201-20417		
30D MHOS	2001-05	REC689-11651-00	REC663-11633-00	REC90201-20417		
30D OL	2001-03	REC689-11651-00	REC663-11633-00	REC90201-20417		
30D EOS	2001-06		REC6R5-11633-00	REC90201-23M01		
40G/J	1986-89	REC6F5-11651-00	REC6F5-11633-00		REC6F5-11681-00	REC90209-27M11
40R ROS	2001		REC6R5-11633-00	REC90201-23M01		
40V	1994-99	REC6H4-11651-00	REC6R5-11633-00	REC90201-23M01		
40V EO	2000	REC6E5-11651-00	REC6R5-11633-00	REC90201-23M01		
40V EOL/EOS	2001-06		REC6R5-11633-00	REC90201-23M01		
40V ETO	2000	REC6E5-11651-00	REC6E5-11633-00			
40V ETOL	2001-03	REC6E5-11651-00				
40V ETOS	2001-03	REC6E5-11651-00				
40V MHOL	2001-06	REC6E5-11651-00	REC6E5-11633-00			
40V MHOS	2001-06		REC6R5-11633-00	REC90201-23M01		
40V MO	2000		REC6R5-11633-00	REC90201-23M01		
40V MOS	2002-05		REC6R5-11633-00	REC90201-23M01		
40X	1998	REC6F5-11651-00	REC6F5-11633-00	REC90201-23M01	REC66T-11681-00	REC90209-27M07
40X MH	2000	REC6F5-11651-00	REC6F5-11633-00	REC90201-23M01	REC66T-11681-00	REC90209-27M07
40X MHL	2001-06	REC6F5-11651-00	REC6F5-11633-00	REC90201-23M01	REC66T-11681-00	REC90209-27M07
40 MHS	2001-02	REC6F5-11651-00	REC6F5-11633-00	REC90201-23M01	REC66T-11681-00	REC90209-27M07
40X W	2000	REC6F5-11651-00	REC6F5-11633-00	REC90201-23M01	REC66T-11681-00	REC90209-27M07
40X WL	2001	REC6F5-11651-00	REC6F5-11633-00	REC90201-23M01	REC66T-11681-00	REC90209-27M07
40X WS	2001	REC6E5-11651-00	REC6F5-11633-00		REC66T-11681-00	REC90209-27M07
40X WT	2000	REC6E5-11651-00	REC6F5-11633-00	REC90201-23M01	REC66T-11681-00	REC90209-27M07
40X WTL	2001-03		REC6F5-11633-00	REC90201-23M01	REC66T-11681-00	REC90209-27M07
40Y ETOL	2001-06		REC6R5-11633-00	REC90201-23M01		
40Y MHOS	2001-06		REC6R5-11633-00	REC90201-23M01		
40GM,W,J	2003-04	REC6F5-11651-00	REC6F5-11633-00	REC90209-27M07	REC6F5-11681-00	REC90209-27M07
50D	1984-87		REC6R5-11633-00	REC90201-23M01		
50G	1993-98	REC6H4-11651-00	REC648-11633-00		REC6G0-11681-00	REC90209-24M03
50G ETO	2000	REC6E5-11651-00	REC648-11633-00	REC90201-23M01	REC6G0-11681-00	REC90209-24M03
50G ETOL	2001-06		REC648-11633-00	REC90201-23M01	REC6G0-11681-00	REC90209-24M03
50H	1994-99	REC6H4-11651-00	REC648-11633-00	REC90201-23M01	REC6G0-11681-00	REC90209-24M03
50H EDO	2000	REC6H4-11651-00	REC648-11633-00	REC90201-23M01	REC6G0-11681-00	REC90209-24M03
50H EDOL	2001-02	REC6H4-11651-00	REC648-11633-00	REC90201-23M01	REC6G0-11681-00	REC90209-24M03
50H EDOS	2001-02	REC6E5-11651-00	REC648-11633-00		REC6G0-11681-00	REC90209-24M03
50H MDO	2000	REC6E5-11651-00	REC648-11633-00	REC90201-23M01	REC6G0-11681-00	REC90209-24M03
50H MO	2000		REC648-11633-00	REC90201-23M01	REC6G0-11681-00	REC90209-24M03
55B	1993-98	REC688-11651-00	REC6R5-11633-00	REC90201-23M01		
70B ETOL	2001-06	REC6E5-11651-00	REC6R5-11633-00	REC90201-23M01		
75A	1993-98	REC688-11651-00	REC6R5-11633-00	REC90201-23M01		
75A E	1990-00	REC688-11651-00	REC6R5-11633-00	REC90201-23M01		
75A EDL	2001-06	REC688-11651-00	REC6R5-11633-00	REC90201-23M01		
75A EM	1992	REC688-11651-00	REC6R5-11633-00	REC90201-23M01		
75A ET	2000	REC688-11651-00				
75A ETL	2001-02	REC688-11651-00				
75A MHD	2000	REC688-11651-00				
75C	1998	REC688-11651-00				
75C ETO	2000	REC688-11651-00				
75C ETOL	2001-06	REC688-11651-00				
80A	1985-96	REC688-11651-00				
85A	1996-98	REC688-11651-00				
85A E	1990-00	REC688-11651-00				
85A ET	2000	REC688-11651-00				
85A ETL	2001-02	REC688-11651-00				
90A	1984-98	REC688-11651-00				
90A ETO	2000-00	REC688-11651-00				
90A ETOL	2001-06	REC688-11651-00				
V4-V6 (4) 21.5		REC6E5-11651-00				
E60 ELHB	2003				REC6K5-11681-00	
E60HMHD	2003				REC6K5-11681-00	
225 AET	1986		REC6E5-11633-00			
115 B	1988-90	REC6E5-11650-01	REC6K7-11633-00	REC90201-21M75		
115BE-T	1991-92	REC6E5-11650-01	REC6K7-11633-00	REC90201-21M75		
140 BETO	1988-89	REC6E5-11650-01	REC6K7-11633-00	REC90201-21M75		
150 AETO	1988-89	REC6E5-11650-01	REC6K7-11633-00	REC90201-21M75		
200-225 BETO	1990-92	REC6E5-11650-01	REC6K7-11633-00	REC90201-21M75		
175 BETO	1990-92	REC6E5-11650-01	REC6K7-11633-00	REC90201-21M75		
250A,E 225C 250B	1990-06	REC61A-11650-00				

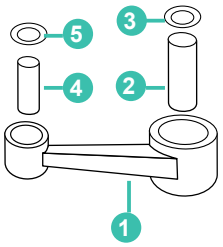

2T STROKES

KITS DE PISTONES | PISTON KITS | KIT PISTONE | KIT DE PISTONS

La gama de pistones RECMAR®, se suministrará siempre como kit, compuesto por pistón, aros, bulón y clips. Eventualmente las referencias antiguas sufren cambios de numeración. En caso de duda contacten con nuestros técnicos comerciales.

The RECMAR® piston assortment is allways supplied as a set (piston, rings, pins and bearings). Old references may change. In case of any doubt contact our technicians.

La gamma dei pistoni RECMAR®, si vende sempre come kit, composto da pistoni, fasce, bulloni e clips. Le referenze vecchie avranno un cambio di numerazione. In caso di dubbi contattare i nostri tecnici commerciali.

La gamme de pistons RECMAR® sera toujours fournie en kit, comprenant piston, segments, axe et clips. Les anciennes références subissent des modifications de numérotation. En cas de doute, contactez nos technico commerciaux

STD Ø 50mm REF	OEM
REC6E0-11631-00-98K	6E0-11631-00-98
REC6G1-11610-00	6G1-11610-00
REC6G1-11633-00	6G1-11633-00
REC93310-112V0	93310-112V0
REC93450-13022	93450-13022



4AC (1985-02)
4AS (1987-96)
5C (1994-98)
5CS (1994-96)

STD Ø 50mm REF	OEM	0.25 REF	OEM	0.50 REF	OEM
REC677-11631-00K	677-11631-00-97	REC677-11635-00K	677-11635-00	REC677-11636-00K	677-11636-00
REC647-11610-00	647-11610-00				
REC6G1-11633-00	6G1-11633-00	REC6G1-11633-00	6G1-11633-00	REC6G1-11633-00	6G1-11633-00
REC93602-14118	93602-14118	REC93602-14118	93602-14118	REC93602-14118	93602-14118
REC93450-13022	93450-13022	REC93450-13022	93450-13022	REC93450-13022	93450-13022



E8D (1997-99)
E8DMH (1998-03)

STD Ø 56mm REF	OEM	0.25 REF	OEM	0.50 REF	OEM
REC6E7-11631-00K	6E7-11631-00	REC6E7-11635-00K	6E7-11635-00	REC6E7-11636-00K	6E7-11636-00
REC682-11610-01	682-11610-00	REC682-11610-11	682-11610-11	REC682-11610-21	682-11610-21
REC634-11633-00	634-11633-00	REC634-11633-00	634-11633-00	REC634-11633-00	634-11633-00
REC93602-14104	93602-14104	REC93602-14104	93602-14104	REC93602-14104	93602-14104
REC93450-15023	93450-15023	REC93450-15023	93450-15023	REC93450-15023	93450-15023



9.9D/15D (1985-95)
9.9F/FMH/MSH (1995-14)
15F/FEM/MSH/FMH/MH
(1995-14)

STD Ø 72mm REF	OEM	0.25 REF	OEM	0.50 REF	OEM
REC6H3-11631-01K	6H3-11631-01-96	REC6H3-11635-01K	6H3-11635-01	REC6H3-11636-01K	6H3-11636-01
REC6K5-11601-02	6K5-11601-02	REC6K5-11601-12	6K5-11601-12	REC6K5-11601-22	6K5-11601-22
REC6H3-11633-00	6H3-11633-00	REC6H3-11633-00	6H3-11633-00	REC6H3-11633-00	6H3-11633-00
REC93603-18M09	93603-18M09	REC93603-18M09	93603-18M09	REC93603-18M09	93603-18M09



25B/BETO (1994-95)
50G/GEO/GETO (1993- 07)
60F/FEO/FEDO/FETO/FEH/TR/TLR (1990-07)
70BEH/BEO/B/BEM/BETO/BEDO/TR (1990-13)

	STD Ø 72mm		0.25		0.50	
	REF	OEM	REF	OEM	REF	OEM
	REC61N-11631-00K	61N-11631-00-95	REC61N-11635-00K	61N-11635-00	REC61N-11636-00K	61N-11636-00
	REC61N-11603-00	61N-11603-00	REC61N-11604-00	61N-11604-00	REC61N-11605-00	61N-11605-00
	REC689-11633-00	689-11633-00	REC689-11633-00	689-11633-00	REC689-11633-00	689-11633-00
	REC93602-20M02	93602-20M02	REC93602-20M02	93602-20M02	REC93602-20M02	93602-20M02
	REC688-11634-00	688-11634-00	REC688-11634-00	688-11634-00	REC688-11634-00	688-11634-00



25VE/VM (1996-01)
25B/BMH (2001-10)
30G/GE (1996-00)
E30HMH(2003)
E30HMH/HW (2003-12)

	STD Ø 67mm		0.25		0.50	
	REF	OEM	REF	OEM	REF	OEM
	REC6H4-11631-01K	6H4-11631-01-95	REC6H4-11635-01K	6H4-11635-01	REC6H4-11636-01K	6H4-11636-01
	REC63D-11603-00	63D-11603-00			REC63D-11605-00	63D-11605-00
	REC648-11633-00	648-11633-00	REC648-11633-00	648-11633-00	REC648-11633-00	648-11633-00
	REC93602-20M02	93602-20M02	REC93602-20M02	93602-20M02	REC93602-20M02	93602-20M02
	REC6H4-11634-01	6H4-11634-01	REC6H4-11634-01	6H4-11634-01	REC6H4-11634-01	6H4-11634-01



25Q/QEO (1990-94)
40V/VMH/VETO/VMH/MLH/VMHO/VE/VEO/TLR/VETO/YETO/H/HE (1995-13)
C40T/TLR (1995-02)
50H/HRD/HMHD/HETO/HEDO/HWM/D/DE/DEMTO (1989-03)

	STD Ø 72mm	
	REF	OEM
	REC689-11631-00K	689-11631-00-95
	REC689-11610-00	689-11610-01
	REC689-11633-00	689-11633-00
	REC93602-20M02	93602-20M02
	REC663-11634-00	633-11634-00



30A (1985-1992)

	STD Ø 59mm	
	REF	OEM
	REC6J8-11631-02	6J8-11631-02-97



25J/JEO/JETO/ESH (1990-99)
30DETO/DEO/DE/DMH/D/ELH/
DWH (1990-12)

	STD Ø 76mm		0.25		0.50	
	REF	OEM	REF	OEM	REF	OEM
	REC6F6-11631-00K	6F6-11631-00-95	REC6F6-11635-00K	6F6-11635-00	REC6F6-11636-00K	6F6-11636-00
	REC6F5-11610-00	6F5-11610-00	REC6F5-11610-10	6F5-11610-10	REC6F5-11610-20	6F5-11610-20
	REC6F5-11633-00	6F5-11633-00	REC6F5-11633-00	6F5-11633-00	REC6F5-11633-00	6F5-11633-00
	REC93603-21111	93603-21111	REC93603-21111	93603-21111	REC93603-21111	93603-21111
	REC663-11634-00	663-11634-00	REC663-11634-00	663-11634-00	REC663-11634-00	663-11634-00



E40GMH/JMH/JWH (2003)
40GWH/JWH (2003)

	STD Ø 80mm		0.25		0.50	
	REF	OEM	REF	OEM	REF	OEM
	REC66T-11631-01K	66T-11631-01-93	REC66T-11635-01K	66T-11635-01	REC66T-11636-01K	66T-11636-01
	REC66T-11603-00	66T-11603-00	REC66T-11604-00	66T-11604-00	REC66T-11605-00	66T-11605-00
	REC6F5-11633-00	6F5-11633-00	REC6F5-11633-00	6F5-11633-00	REC6F5-11633-00	6F5-11633-00
	REC93603-21111	93603-21111	REC93603-21111	93603-21111	REC93603-21111	93603-21111
	REC663-11634-00	663-11634-00	REC663-11634-00	663-11634-00	REC663-11634-00	663-11634-00



E40X/XMH/XW (2002-13)
40XMH/XW (2003-13)

	STD Ø 67mm		0.25		0.50	
	REF	OEM	REF	OEM	REF	OEM
	REC6H4-11631-00K	6H4-11631-00-96	**REC6H4-11635-00K**	6H4-11635-00	**REC6H4-11636-00K**	6H4-11636-00
	REC6H4-11610-00-00	6H4-11610-00				
	REC648-11633-00	648-11633-00	**REC648-11633-00**	648-11633-00	**REC648-11633-00**	648-11633-00
	REC93602-20M02	93602-20M02	**REC93602-20M02**	93602-20M02	**REC93602-20M02**	93602-20M02
	REC6H4-11634-01	6H4-11634-01	**REC6H4-11634-01**	6H4-11634-01	**REC6H4-11634-01**	6H4-11634-01



40N/E/H (1984-1988)
50D/ETN (1984-1988)

	STD Ø 81mm		0.25		0.50	
	REF	OEM	REF	OEM	REF	OEM
	REC6H1-11631-03K	6H1-11631-03-95				
	REC688-11603-A0	688-11603-A0			**REC688-11605-A0**	688-11605-A0
	REC663-11633-00	663-11633-00				
	REC93603-21111	93603-21111	**REC93603-21111**	93603-21111	**REC93603-21111**	93603-21111



55B (1996)
75 TLRB (2003)
75CETO (2004-13)
75AE/T/M/HD (1995-98)
E75B (2000-02)
75AED (2003-07)
75TLR (2000-02)
80A/AETO/AEMTO (1994-02)
85A/AE (1995-02)
90A/AEO/AEMO/AETO/AET/TLR/AETO (1994-13)

	STD Ø 82mm	
	REF	OEM
	REC688-11631-02K	688-11631-02-95
	REC688-11610-02	688-11610-02
	REC663-11633-00	663-11633-00
	REC93603-21111	93603-21111
	REC688-11634-00	688-11634-00



55BET (1990)
55BE (1992)

	STD	
	REF	OEM
	REC688-11631-81K	688-11631-81-96
	REC688-11610-02	688-11610-02
	REC93603-21111	93603-21111



75A/AE (1990-93)
85A/AE (1990-93)

	STD Ø 82mm		0.25		0.50	
	REF	OEM	REF	OEM	REF	OEM
	REC688-11631-03K	688-11631-03-94	**REC688-11635-03K**	688-11635-03	**REC688-11636-03K**	688-11635-03
	REC688-11603-A0	688-11603-A0			**REC688-11605-A0**	688-11605-A0
	REC663-11633-00	663-11633-00	**REC663-11633-00**	663-11633-00	**REC663-11633-00**	663-11633-00
	REC93603-21111	93603-21111	**REC93603-21111**	93603-21111	**REC93603-21111**	93603-21111
	REC688-11634-00	688-11634-00	**REC688-11634-00**	688-11634-00	**REC688-11634-00**	688-11634-00



E48CMHS (2003)
55B/BM/BET (1993-02)
E55CMH (2003-05)
E75B (2000)
85A/AET/AED (2000-03)

	STD Ø 72mm		0.25		0.50	
	REF	OEM	REF	OEM	REF	OEM
	REC6K5-11631-03K	6K5-11631-03-95	**REC6K5-11635-03K**	6K5-11635-03	**REC6K5-11636-03K**	6K5-11636-03
	REC6K5-11601-02	6K5-11601-02	**REC6K5-11601-12**	6K5-11601-12	**REC6K5-11601-22**	6K5-11601-22
	REC6H3-11633-00	6H3-11633-00	**REC6H3-11633-00**	6H3-11633-00	**REC6H3-11633-00**	6H3-11633-00
	REC93603-18M09	93603-18M09	**REC93603-18M09**	93603-18M09	**REC93603-18M09**	93603-18M09



E60HE/HM/H/MHZ/MLHA/ELHB/HMHD -S-L (1997-13)

	STD Ø 89mm ESTRIBOR | STD | TRIBORDO | DROIT		STD Ø 89mm BABOR | PORT | BABORDO | GAUCHE	
	REF	OEM	REF	OEM
	REC6R5-11631-11K	6R5-11631-11-93	**REC6R5-11642-11K**	6R5-11642-11-93
	REC6R5-11603-00	6R5-11603-00	**REC6R5-11603-00**	6R5-11603-00
	REC6R5-11633-00	6R5-11633-10		
	REC93310-32337	93310-32337	**REC93310-32337**	93310-32337
	REC6R5-11634-00	6R5-11634-10	**REC6R5-11634-00**	6R5-11634-10



100A/AETO (1996-01)
115B (2000-02)
115CEO/CETO/TLR/TXRZ (1993-13)
130BETO/TLR (1993-07)
150 CETO/L150CETO (1993-95)
175BETO (1993-95)
200CETO (1993)
200BETO (1993-95)
225BET/BETO (1993-95)

	STD Ø 89mm ESTRIBOR | STD | TRIBORDO | DROIT		STD Ø 89mm BABOR | PORT | BABORDO | GAUCHE		0.2590		0.50	
	REF	OEM	REF	OEM	REF	OEM	REF	OEM
	REC6R5-11631-01K	6R5-11631-11-93	**REC6R5-11642-01K**	6R5-11642-11-93				
	REC64D-11603-01	64D-11603-02	**REC64D-11603-01**	64D-11603-02	**REC64D-11604-01**	64D-11603-04	**REC64D-11605-01**	64D-11603-05
	REC6K7-11633-00	6K7-11633-00	**REC6K7-11633-00**	6K7-11633-00				
	REC93310-32337	93603-21111	**REC93310-32337**	93603-21111				
	REC6R5-11634-00	6R5-11634-00	**REC6R5-11634-00**	6R5-11634-00				



115BE/CEO (1992)
E115AEL (2003)
130BETO (1992)
150CETO (1992)
175BETO (1992)
200BETO (1992)

	STD Ø 89mm ESTRIBOR | STD | TRIBORDO | DROIT		STD Ø 89mm BABOR | PORT | BABORDO | GAUCHE	
	REF	OEM	REF	OEM
	REC6G5-11631-00K	6G5-11631-00-93	**REC6G5-11642-00K**	6G5-11642-00-93
	REC6E5-11610-02	6E5-11610-02	**REC6E5-11610-02**	6E5-11610-02
	REC6E5-11633-00	6E5-11633-01	**REC6E5-11633-00**	6E5-11633-01
	REC93603-21111	93603-21111	**REC93603-21111**	93603-21111
	REC6E5-11634-00	6E5-11634-00	**REC6E5-11634-00**	6E5-11634-00



115ETN (1984)
115A (1985-87)
140AETO (1984-87)
150ETN (1984)
150AETO (1985-87)
175AETO (1984-87)
200ETN (1984)
200AETO (1985-87)

	STD Ø 89mm ESTRIBOR | STD | TRIBORDO | DROIT		STD Ø 89mm BABOR | PORT | BABORDO | GAUCHE	
	REF	OEM	REF	OEM
	REC64D-11631-00K	64D-11631-02-90	**REC64D-11642-00K**	64D-11642-02-90
	REC64D-11603-01	64D-11603-02	**REC64D-11603-01**	64D-11603-02
	REC6R5-11633-00	6R5-11633-10	**REC6R5-11633-00**	6R5-11633-10
	REC93310-32337	93310-32337	**REC93310-32337**	93310-32337
	REC6R5-11634-00	6R5-11634-10	**REC6R5-11634-00**	6R5-11634-10



150F/FETO (1996-2007)
150TXR/TR (2002-05)
150AET (2001-02)
175D/DETO (1996-03)
200AET (2003)
200F/TLR/FETO (1996-10)
200G/GETOL (1996-02)
L200F/FETO (1996-00)
225D/DET (1996-09)

GUÍA DE PISTONES Y SEGMENTOS | GUIDE PISTON & RING | GUIDA PISTONE E FASCE | GUIDE PISTONS ET SEGMENTS

			ESTRIBOR | STD TRIBORDO | DROIT	BABOR | PORT BABORDO | GAUCHE
4A	1985-87	REC6G1-11610-00	REC6E0-11631-00-98K	
4AC	1987-99	REC6G1-11610-00	REC6E0-11631-00-98K	
4ACMHL/ HS	2001-03	REC6G1-11610-00	REC6E0-11631-00-98K	
4AS	1987-96	REC6G1-11610-00	REC6E0-11631-00-98K	
4BC	1998	REC6G1-11610-00	REC6E0-11631-00-98K	
4BCMHL/ HS	2001-03	REC6G1-11610-00	REC6E0-11631-00-98K	
5C	1994-98	REC6G1-11610-00	REC6E0-11631-00-98K	
5CMHL/HS	2001-03	REC6G1-11610-00	REC6E0-11631-00-98K	
5CS	1994-96	REC6G1-11610-00	REC6E0-11631-00-98K	
6C	1984-96	REC6G1-11610-00		
6CMHL/HS	2002	REC6G1-11610-00		
6D	1984-96	REC6G1-11610-00		
6DMHL/HS	2002	REC6G1-11610-00		
8C	1984-96	REC6G1-11610-00		
8CMHL/HS	2002	REC6G1-11610-00		
8CMHX	2002	REC6G1-11610-00		
8CWHL	2002	REC6G1-11610-00		
8CWHS	2002	REC6G1-11610-00		
E8D	1997-98	REC647-11610-00	REC677-11631-00K	
E8DMH	1999	REC689-11610-00	REC677-11631-00K	
9.9D	1985	REC682-11610-01	REC6E7-11631-00K	
9.9FEMHW	1995-13	REC682-11610-01	REC6E7-11631-00K	
13.5/15 FEMHW LBC	1995-13	REC682-11610-01	REC6E7-11631-00K	
15D	1985-95	REC682-11610-01	REC6E7-11631-00K	
25B/BETO	1994-95	REC6K5-11601-02	REC6H3-11631-01K	
25BMHL/HS	2001-10	REC61N-11603-00	REC61N-11631-00K	
25J	1990-00		REC6J8-11631-02	
25Q	1990-94		REC6H4-11631-01K	
25VE/VM	1996-01	REC61N-11603-00	REC61N-11631-00K	
25BMHL/ HM	2001-12	REC61N-11603-00	REC61N-11631-00K	
25BMHS/ WC	2001-12	REC61N-11603-00	REC61N-11631-00K	
C25 MHV2	1997-98	REC61N-11603-00	REC61N-11631-00K	
30A	1984-85	REC689-11610-00	REC689-11631-00K	
30AM	1990-92	REC689-11610-00	REC689-11631-00K	
30D	1990-02		REC6J8-11631-02	
30DEOL -EL	2001-10		REC6J8-11631-02	
30DEOS	2001-10		REC6J8-11631-02	
30DEOT -DETOL	2001-10		REC6J8-11631-02	
30DMHOL	2001-14		REC6J8-11631-02	
30DMHOS	2001-10		REC6J8-11631-02	
E30HMH	2003	REC61N-11603-00	REC61N-11631-00K	
30G/GE	1996-97	REC61N-11603-00	REC61N-11631-00K	
30 HM/WH	2003	REC61N-11603-00	REC61N-11631-00K	
30 HM/W	2010-12	REC61N-11603-00	REC61N-11631-00K	
C30	1993-97	REC61N-11603-00	REC61N-11631-00K	
40H	1984-88	REC6H4-11610-00-00	REC6H4-11631-00K	
40H	1989-94		REC6H4-11631-01K	
40RMHO	2000	REC6H4-11610-00-00	REC6H4-11631-01K	
40RROS	2001	REC6H4-11610-00-00	REC6H4-11631-01K	
40V	1995-98	REC6H4-11610-00-00	REC6H4-11631-01K	
40VEO	2000	REC6H4-11610-00-00	REC6H4-11631-01K	
40VEOL/OS	2001-06	REC6H4-11610-00-00	REC6H4-11631-01K	
40VETO	2000	REC6H4-11610-00-00	REC6H4-11631-01K	
40VETOL	2001-06	REC6H4-11610-00-00	REC6H4-11631-01K	
40VETOS	2001-3	REC6H4-11610-00-00	REC6H4-11631-01K	
40VMHOL/ OS	2001-06	REC6H4-11610-00-00	REC6H4-11631-01K	
40VMO	2000	REC6H4-11610-00-00	REC6H4-11631-01K	
40VMOS	2002	REC6H4-11610-00-00	REC6H4-11631-01K	
40X	1998	REC66T-11603-00	REC66T-11631-01K	
40XMH	2000	REC66T-11603-00	REC66T-11631-01K	
40XMHL	2001-06	REC66T-11603-00	REC66T-11631-01K	
40XMHS	2001-02	REC66T-11603-00	REC66T-11631-01K	
40XW	2000	REC66T-11603-00	REC66T-11631-01K	
40XWL/WS	2001	REC66T-11603-00	REC66T-11631-01K	
40XWT	2000	REC66T-11603-00	REC66T-11631-01K	
40XWTL	2001-03	REC66T-11603-00	REC66T-11631-01K	
40YETOL/ YMHOS	2001-04	REC6H4-11610-00-00	REC6H4-11631-01K	
50D	1984-89	REC6H4-11610-00-00	REC6H4-11631-01K	
50D	1989-94		REC6H4-11631-01K	
50G/EO	1993-00	REC6K5-11601-02	REC6H3-11631-01K	
50GETO	2000	REC6K5-11601-02	REC6H3-11631-01K	
50GETOL	2001-07	REC6K5-11601-02	REC6H3-11631-01K	
50H	1995-98	REC6H4-11610-00-00	REC6H4-11631-01K	
50HEDO	2000	REC6H4-11610-00-00	REC6H4-11631-01K	
50HEDOL/ OS	2001-02	REC6H4-11610-00-00	REC6H4-11631-01K	
50HMDO	2000	REC6H4-11610-00-00	REC6H4-11631-01K	
55B	1993-02	REC688-11603-A0	REC6H1-11631-03K	
55BE	1990-92	REC688-11610-02	REC688-11631-02K	
55BE	2000	REC688-11603-A0	REC688-11631-02K	
55BEHD/ BET	2000	REC688-11603-A0	REC688-11631-02K	
55BETL	2001-02	REC688-11603-A0	REC688-11631-02K	
60F	1990-02	REC6K5-11601-02	REC6H3-11631-01K	
60FEO	1991-00	REC6K5-11601-02	REC6H3-11631-01K	
60FETO	2000-06	REC6K5-11601-02	REC6H3-11631-01K	
60FETOL	2001-07	REC6K5-11601-02	REC6H3-11631-01K	
E60/HM/ HDL	2001-06	REC6K5-11601-02	REC6K5-11631-03K	
70B	1990-02	REC6K5-11601-02	REC6H3-11631-01K	
70BEDOL	2001-03	REC6K5-11601-02	REC6H3-11631-01K	
70BEO	1991-00	REC6K5-11601-02	REC6H3-11631-01K	
70BETO	1998-13	REC6K5-11601-02	REC6H3-11631-01K	
70BETOL	2001-13	REC6K5-11601-02	REC6H3-11631-01K	
75A	1993-94	REC688-11610-02	REC688-11631-81K	
75AET	2000	REC688-11603-A0	REC6H1-11631-03K	
75AETL	2001-06	REC688-11603-A0	REC6H1-11631-03K	
75AMHD	2000	REC688-11603-A0	REC6H1-11631-03K	
75C	1998	REC688-11603-A0	REC6H1-11631-03K	
75CETO	2000	REC688-11603-A0	REC6H1-11631-03K	
75CETOL	2001-06	REC688-11603-A0	REC6H1-11631-03K	
80A	1994-96	REC688-11603-A0	REC6H1-11631-03K	
85A	1990-94	REC688-11610-02	REC688-11631-81K	
85A	1995-98	REC688-11603-A0	REC6H1-11631-03K	
85AE	1990-92	REC688-11610-02	REC688-11631-81K	
85AE/AET	2000	REC688-11603-A0	REC6H1-11631-03K	
85AETL	2001-02	REC688-11603-A0	REC6H1-11631-03K	
90A	1994-98	REC688-11603-A0	REC6H1-11631-03K	
90AETO	2000	REC688-11603-A0	REC6H1-11631-03K	
90AETOL	2001-06	REC688-11603-A0	REC6H1-11631-03K	
100A	1997-98	REC64D-11603-01	REC6R5-11631-11K	REC6R5-11642-11K
100AETO	2000	REC64D-11603-01	REC6R5-11631-11K	REC6R5-11642-11K
100AETOL	2001	REC64D-11603-01	REC6R5-11631-11K	REC6R5-11642-11K
115A	1984-87	REC6E5-11610-02	REC6G5-11631-00K	REC6G5-11642-00K
115B	1992	REC61U-11601-00	REC6R5-11631-01K	REC6R5-11642-01K
115B	1993-96	REC6R5-11603-00	REC6R5-11631-11K	REC6R5-11642-11K
115BETO	1997-00	REC64D-11603-01	REC6R5-11631-11K	REC6R5-11642-11K
115BETOL	2001-02	REC64D-11603-01	REC6R5-11631-11K	REC6R5-11642-11K
115C	1992	REC64D-11603-01	REC6R5-11631-11K	REC6R5-11642-11K
115C	1993-96	REC6R5-11603-00	REC6R5-11631-11K	REC6R5-11642-11K
115C	1997-98	REC64D-11603-01	REC6R5-11631-11K	REC6R5-11642-11K
115CETO	2000	REC64D-11603-01	REC6R5-11631-11K	REC6R5-11642-11K
115CETOL	2001-06	REC64D-11603-01	REC6R5-11631-11K	REC6R5-11642-11K
115CETOX	2001	REC64D-11603-01	REC6R5-11631-11K	REC6R5-11642-11K
E115AWEL	2003-06	REC64D-11603-01	REC6R5-11631-01K	REC6R5-11642-01K
130B	1992	REC64D-11603-01	REC6R5-11631-11K	REC6R5-11642-11K
130B	1993-96	REC6R5-11603-00	REC6R5-11631-11K	REC6R5-11642-11K
130B	1997-98	REC64D-11603-01	REC6R5-11631-11K	REC6R5-11642-11K
130BETO	2000	REC64D-11603-01	REC6R5-11631-11K	REC6R5-11642-11K
130BETOL	2001-06	REC64D-11603-01	REC6R5-11631-11K	REC6R5-11642-11K
130BETOX	2001	REC64D-11603-01	REC6R5-11631-11K	REC6R5-11642-11K
L130B	1992	REC61U-11601-00	REC6R5-11631-01K	REC6R5-11642-01K
L130B	1993	REC6R5-11603-00	REC6R5-11631-11K	REC6R5-11642-11K

			ESTRIBOR | STD TRIBORDO | DROIT	BABOR | PORT BABORDO | GAUCHE
L130B	1997-98	REC64D-11603-01	REC6R5-11631-11K	REC6R5-11642-11K
L130BETOX	2000-01	REC64D-11603-01	REC6R5-11631-11K	REC6R5-11642-11K
140A	1985-87	REC6E5-11610-02	REC6G5-11631-00K	REC6G5-11642-00K
150A	1984-87	REC6E5-11610-02	REC6G5-11631-00K	REC6G5-11642-00K
150AET	1998-00	REC64D-11603-01	REC64D-11631-00K	
150AETL/ AETX	2001-02	REC64D-11603-01	REC64D-11642-00K	
150C	1992	REC61U-11601-00	REC6R5-11631-01K	REC6R5-11642-01K
150C	1993-05	REC6R5-11603-00	REC6R5-11631-11K	REC6R5-11642-11K
150F	1996-01	REC64D-11603-01	REC6G5-11631-00K	REC6G5-11642-00K
150FETO	1998-00	REC64D-11603-01	REC64D-11631-00K	REC64D-11642-00K
150FETOL	2001-04	REC64D-11603-01	REC64D-11631-00K	REC64D-11642-00K
150FETOX	2001-05	REC64D-11603-01	REC64D-11631-00K	REC64D-11642-00K
D150H	1999-02	REC64D-11603-01	REC64D-11631-00K	REC64D-11642-00K
L150C	1992	REC61U-11601-00	REC6R5-11631-01K	REC6R5-11642-01K
L 150C	1993-95	REC6R5-11603-00	REC6R5-11631-11K	REC6R5-11642-11K
L150F	1996-98	REC64D-11603-01	REC6G5-11631-00K	REC6G5-11642-00K
L150FETO	2000	REC64D-11603-01	REC64D-11631-00K	REC64D-11642-00K
L150FETOL/ FETOX	2001	REC64D-11603-01	REC64D-11642-00K	REC64D-11642-00K
175A	1984-87	REC6E5-11610-02	REC6G5-11631-00K	REC6G5-11642-00K
175B	1992	REC61U-11601-00	REC6R5-11631-01K	REC6R5-11642-01K
175BETO/ CETO	1993-95	REC6R5-11603-00	REC6R5-11631-11K	REC6R5-11642-11K
175D	1996-98	REC64D-11603-01	REC6G5-11631-00K	REC6G5-11642-00K
175DETO	1996-00	REC64D-11603-01	REC64D-11631-00K	
175DETOL	2001-03	REC64D-11603-01	REC64D-11642-00K	
175DETOX	2001-02	REC64D-11603-01	REC64D-11642-00K	
200A	1984-87	REC6E5-11610-02	REC6G5-11631-00K	REC6G5-11642-00K
200B	1992	REC64D-11603-01	REC6R5-11631-01K	REC6R5-11642-01K
200B	1993-95	REC6R5-11603-00	REC6R5-11631-11K	REC6R5-11642-11K
200F	1996-98	REC64D-11603-01	REC6G5-11631-00K	REC6G5-11642-00K
200FETO	2000	REC64D-11603-01	REC64D-11631-00K	REC64D-11642-00K
200FETOL/F	2001-04	REC64D-11603-01	REC64D-11631-00K	REC64D-11642-00K

			ESTRIBOR | STD TRIBORDO | DROIT	BABOR | PORT BABORDO | GAUCHE
200G	1999	REC64D-11603-01	REC64D-11631-00K	REC64D-11642-00K
200GETO	2000	REC64D-11603-01	REC64D-11631-00K	REC64D-11642-00K
200GETOL	2001-03	REC64D-11603-01	REC64D-11631-00K	REC64D-11642-00K
L200B	1992	REC6R5-11603-00	REC6R5-11631-01K	REC6R5-11642-01K
L 200B	1993-95	REC6R5-11603-00	REC6R5-11631-11K	REC6R5-11642-11K
L200F	1996-01	REC64D-11603-01	REC6G5-11631-00K	REC6G5-11642-00K
L200FETO	1996-00	REC64D-11603-01	REC64D-11631-00K	REC64D-11642-00K
200FETOL	2001-04	REC64D-11603-01	REC64D-11631-00K	REC64D-11642-00K
220A, ET, O	1985-87	REC6E5-11610-02		
225B	1993-95	REC6R5-11603-00	REC6R5-11631-11K	REC6R5-11642-11K
225D	1996-01	REC64D-11603-01	REC6G5-11631-00K	REC6G5-11642-00K
225DETO	1996-00	REC64D-11603-01	REC64D-11631-00K	REC64D-11642-00K
225G	1999	REC64D-11603-01	REC64D-11631-00K	REC64D-11642-00K
225GETO	1999-00	REC64D-11603-01	REC64D-11631-00K	REC64D-11642-00K
225GETOL	2001-03	REC64D-11603-01	REC64D-11631-00K	REC64D-11642-00K
L225C	1994-95	REC6R5-11603-00	REC69L-11631-00K	REC69L-11642-00
250A	1993-95	REC6R5-11603-00	REC69L-11631-00K	REC69L-11642-00
250AETO	2000	REC64D-11603-01	REC69L-11631-00K	REC69L-11642-00
250AETOX	2001-04	REC64D-11603-01	REC69L-11631-00K	REC69L-11642-00
250B	1997-98	REC64D-11603-01	REC69L-11631-00K	REC69L-11642-00
250BETO	2000	REC64D-11603-01	REC69L-11631-00K	REC69L-11642-00
250BETOX	2001	REC64D-11603-01	REC69L-11631-00K	REC69L-11642-00
L250AETO	2000-05	REC64D-11603-01	REC69L-11631-00K	REC69L-11642-00
L250AETOX	2001-06	REC64D-11603-01	REC69L-11631-00K	REC69L-11642-00
L250B	1997-02	REC64D-11603-01	REC69L-11631-00K	REC69L-11642-00
L250BETO	2000-03	REC64D-11603-01	REC69L-11631-00K	REC69L-11642-00
L250BETOX	2001-03	REC64D-11603-01	REC69L-11631-00K	REC69L-11642-00
L250GETOX	2006-10	REC64D-11603-01	REC69L-11631-00K	REC69L-11642-00
L250 A	1997-98	REC64D-11603-01	REC69L-11631-00K	REC69L-11642-00



GUÍA CORREAS DE DISTRIBUCIÓN
GUIDE TIMIMG BELT
GUIDA CINGHIE DISTRIBUZIONE
GUIDE DES COURROIES DE DISTRIBUTION

			REF	OEM
F6A-04/ F6A-05/ F8C-04/ F8C-05/ FT8D-04/ FT8D-05/ F9.9F/ F9.9J/ FT9.9G/ FT9.9L	2000+	60	REC68T-46241-00	68T-46241-00
F8B/ FT9.9A/ F9.9B	1985-06	64	REC6G8-46241-00	6G8-46241-00
F9.9C/ FT9.9D/ F15A	1998-08	68	REC66M-46241-00	66M-46241-00
F15C/ F20B	2007+	80	PAF20-05000003	6AH-46241-00
F20A/ F25A/ FT25B/ F30A/ F40B/ F45A	1998-09	80	REC65W-46241-00	65W-46241-00
F40A/ F50A/ FT50B/ FT50C/ F60A/ FT60B	1995+	106	REC62Y-46241-00	62Y-46241-00
F25D/ FT25F/ F30B/ F40F/ F50F/ FT50G/ FT50J/ F50H/ F60C/ F60F/ FT60D/ FT60G/ F70A	2005+	94	REC6C5-46241-00	6C5-46241-00
F80A/ F80B/ F100A/ F100B/ F100D/ F100F(L)/ F115A	1999+	135	REC67F-46241-00	67F-46241-00
F(L) 150A	2004+	147	REC63P-46241-00	63P-46241-00
F(L) 200A/ F(L) 225A	2002-11	159	REC69J-46241-00	69J-46241-00
F(L) 200C/ F(L) 225B/ F225C/ F(L) 250A/ F(L) 250B	2005+	225	REC6P2-46241-02	6P2-46241-02

SISTEMA DE ESCAPE Y ADMISIÓN
EXHAUST & INTAKE SYSTEM
SISTEMA DI SCARICO E ASPIRAZIONE
SYSTÈME D'ECHAPPEMENT ET SYSTÈME D'ADMISSION

SISTEMA DE ESCAPE | EXHAUST SYSTEM | SISTEMA SCARICO | SYSTÈME D'ECHAPPEMENT

JUNTAS DEL SISTEMA DE ESCAPE | EXHAUST GASKETS | GUARNIZIONE SCARICO | JOINTS D'ECHAPPEMENT

REF	OEM
REC6G1-41133-A0	6G1-41133-A0

6C/CEM/D/DEM/TRV/MSH/MHS/CWH/DMH/J
8CEM/C/TRV/MSH/MH/CMH/J/N



REF	OEM
PAF15-04010004	66M-41138-00

F9.9/15/13.5
T9.9



REF	OEM
PAF15-03000003	66M-45115-00

F9.9/13.5/15
T9.9



REF	OEM
REC682-41133-A0	682-41133-A0

9.9D
E9.9DMH
15D
E15DMH



REF	OEM
REC63V-41133-A1	63V-41133-A1

9.9F/FEM/FMH/MH/AW/MSH
13.5AWH

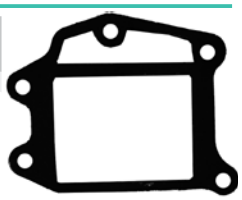

REF	OEM
REC6L2-41133-A3	6L2-41133-A3

20D/DEM/DEO/MLH/DMH
25NE/NW/MLH/N/MSH/MH/MLH



REF	OEM
REC6L2-41134-00	6L2-41134-00

20D/DEM/DEO/MLH/DMH
25NE/NW/MLH/N/MSH/MH/MLH



REF	OEM
PAF25-05080004	65W-14457-10

F20/25
T25



REF	OEM
REC62Y-45127-00	62Y-45127-00

F20/25/40/45/50
T50



REF	OEM
REC62Y-41133-00	62Y-41113-00

F20/25/40/45/50
T50



REF	OEM
REC67C-41133-00	67C-41133-00

F20/25/40/50/30
T25



REF	OEM
REC67C-45123-00	67C-45123-00

F20/25/40/50/30
T25



REF	OEM
REC663-45123-00	663-45123-00

25QEO
40H/N
F40/45/50
50ETN
T50
55B
E55CM



REF	OEM
REC664-41134-A0	664-41134-A0

20C/CM/A/G/GE
E25A/25VE/VM/DE/D

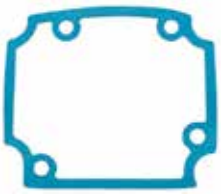

REF	OEM
REC63D-45123-00	63D-45123-00

25AEO/50H/40V/YE
C40M/40TLR/50DE



REF	OEM
REC6H3-45127-00	6H3-45127-00

25B/BETO
50G/GEO/GETO
60FE/FET/FEO/FETO/FEDO
E60H/MHZ/MLH/HMH/HW



REF	OEM
REC6H3-45123-00	6H3-45123-00

25B/BETO
50G/GEO/GETO
60FE/FET/FEO/FETO/FEDO
E60H/MHZ/MLH/HMH/HW
70B/ETN/
BEH/BEO/BEMO/BETO/CE



REF	OEM
REC6H4-41134-A0	6H4-41134-A0

25QEO/50H/40V/YE
C40M/40TLR/50DE



REF	OEM
REC66T-41133-A1	66T-41133-A0

40X/XW/XMH
E40X/MLN



REF	OEM
REC676-41133-A0	676-41133-A0

40QE/QE-Z/QM/QWC

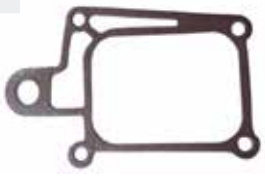

REF	OEM
REC676-45128-00	676-45128-00

40QE/QE-Z/QM/QWC



REF	OEM
REC676-45127-00	676-45127-00

40QE/QE-Z/QM/QWC



REF	OEM
REC688-41134-00	688-41134-A0

75A/AE/AED/CETO/TLR
80A/AEO
85A/AED-T
90A/AET/AEO



REF	OEM
REC688-45123-00	688-45123-00

75CETO/TLR
E75B/AED
80A/AE/TLR
85A/AE
90A/AE/TLR/TR



REF	OEM
REC67F-41138-00	67F-41138-00

F80/100/115



REF	OEM
REC67F-45127-00	67F-45127-00

F80/100/115



REF	OEM
REC67F-45123-00	67F-45123-00

F75/80/100



REF	OEM
REC67F-41134-A0	67F-41134-A0

F80/100/115

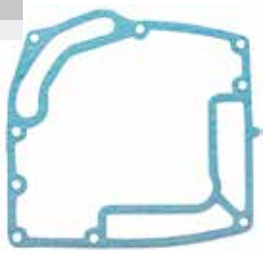

REF	OEM
REC68V-45123-00	

F80/100/115



REF	OEM
REC6E5-41135-A0	6E5-41135-A0

100A/AET/TLR
115B/BETO/CEO/CETO/TXR
130BETO



REF	OEM
REC6E5-41134-A0	6E5-41134-A0

100A/AET/TLR
115B/BETO/CEO/CETO/TXR, 130BETO



REF	OEM
REC6G5-41134-A1	6G5-41134-A1

130BETO
150FETO/PETO/TR
175DETO/GETO/TR
Z200
200AET/ FETO/NETO/TXR
225DET



REF	OEM
REC69J-41138-00	69J-41138-00

F200/225/250



REF	OEM
REC69J-45123-00	69J-45123-00

F200/225/250



REF	OEM
REC69J-41135-A0	69J-41135-A0

F200/225/250

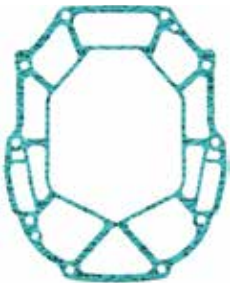

REF	OEM
REC69J-41134-A0	69J-41134-A0

F200/225



REF	OEM
REC6S1-41136-00	6S1-41136-00

F200/225/250

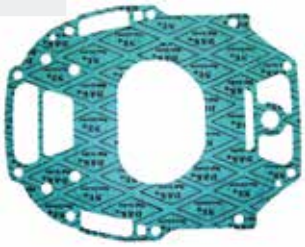

REF	OEM
REC6AW-41134-01	6AW-41134-00

FL/F300-350 (2008+)



new

REF	OEM
REC6A1-14613-A0	6A1-14613-A0, 00, 01

2B/C/M (1985-10)
2T/strokes

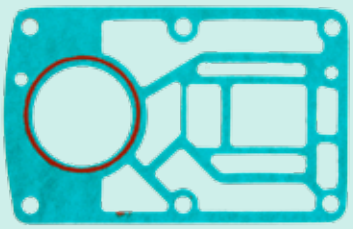

new

REF	OEM
REC93101-13M27	93101-13M27

E9.9/E15
F9.9/F15 (modelos antiguos | old models | modello vecchio | anciens)



JUNTAS DE COLECTOR Y CARTER — GASKET, UPPERCASING, OIL PAN, MANIFOLD

REF	OEM
REC646-14623-A1	646-14623-A1

2B

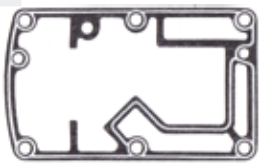

REF	OEM
PAF2.6-04000004	69M-11351-A0

F2.5

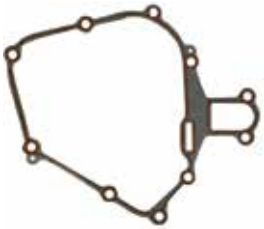

GUARNIZIONI COLLETTORE E CARTER — JOINTS DE COLLECTEUR ET CARTER D'HUILE

REF	OEM
PAF4-04000002	68D-11351-A0

F4



REF	OEM
REC68T-13475-00	68T-13475-00

F6/8/9.9
T8/9.9

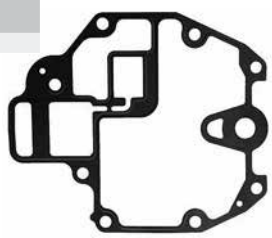

REF	OEM
REC67C-15312-00	67C-15312-00

F25/30/40
T25

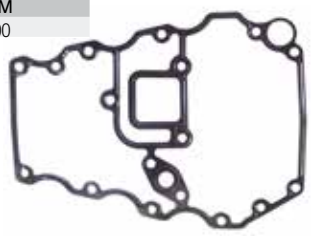

REF	OEM
REC6G8-45113-A1	6G8-45113-A1

F8/9.9
T9.9



REF	OEM
REC67C-45113-00	67C-45113-00

F25/30/40
T25

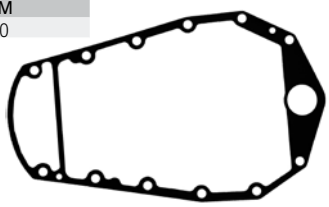

REF	OEM
REC6AH-13329-00	6AH-13329-00

F9.9/13.5/15/20



REF	OEM
REC6H3-45114-A1	6H3-45114-A1

25B/BETO
50G/GEO/GETO
60FEDO/TLR/BEO
E60H/MLHHMH
70B/BEO
70BETO/TR

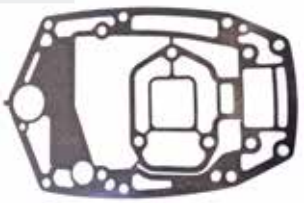

REF	OEM
REC682-45113-A0	682-45113-02

9.9D
15D



REF	OEM
PAF25-02010007	67C-15312-00

F25/30/40
T25



REF	OEM
REC6AH-15312-00	6AH-15312-00

F9.9/13.5/15/20



REF	OEM
REC676-45114-A1	676-45114-A1

40QE/QE-Z/QM/QWC/GWH/JWH
E40GMH/JMH



REF	OEM
PAF15-00000005	66M-45113-00

F15/9.9/13.5
FT9.9

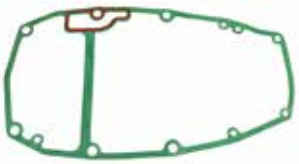

REF	OEM
REC66T-45114-A0	66T-45114-A0

40X/XMH/XW
E40X/MLH/XMH

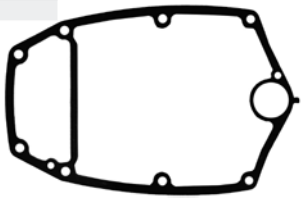

REF	OEM
REC62Y-15312-00	62Y-15312-00

F20/25/40/45/50
T50

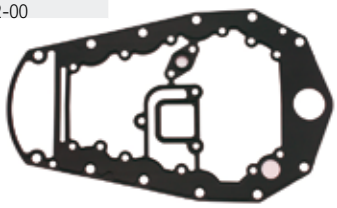

REF	OEM
REC697-45114-00	697-45114-A0

E48CMH
55BET/B/BE/BM
E55CMH



REF	OEM
REC63D-45114-A0	63D-45114-A0

50H/HR/HM
40V/ VM/VETO/C40MLH
C40T/TLR
40YETO

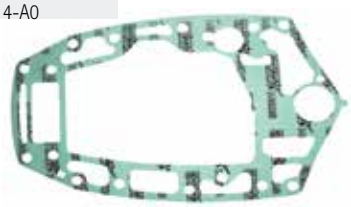

REF	OEM
REC63P-15312-00	63P-15312-00

F150/175/200



REF	OEM
REC688-45114-A1	688-45114-A1

75A/AE/CETO/TLR/AED
E75B
85A/AED-M-T
80A/AE/AEO
90A/ETN/AEO/AETO

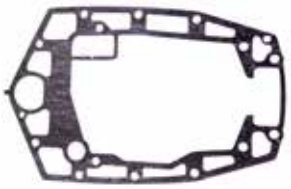

REF	OEM
REC61A-41134-A0	6D0-41134-00

225C/FETO/G/GETO
Z250
250B/AET/BETO/TXR
Z300/AETO/TR

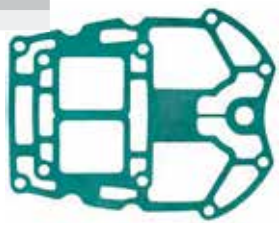

REF	OEM
REC67F-45113-00	67F-45113-00

F75/80/100/115

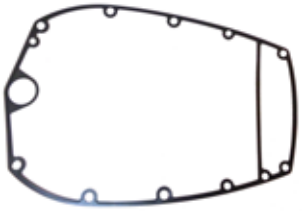

REF	OEM
REC6AW-45113-00	6AW-45113-00

F300/350

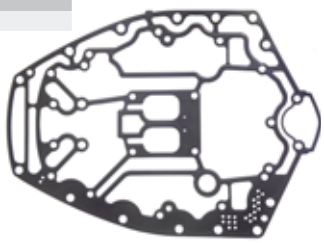

REF	OEM
REC68V-15312-00	68V-15312-00

F80/100/115

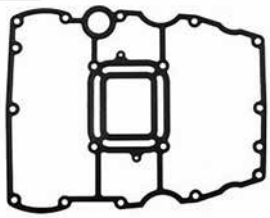

REF	OEM
REC6AW-15312-00	6AW-15312-00

FL/F300-350 (2008+)



REF	OEM
REC6G5-45114-A0	6G5-45114-A1

115A/B/ETN/BETO
130BETO
140AETO/BETO
150ETN/AETO/CETO/FETO
Z150
Z175
175AETO
200ETN/AET-0
Z200
225AETO/DET



REF	OEM
REC6AW-15451-00	6AW-15451-00

FL/F300-350 (2008+)

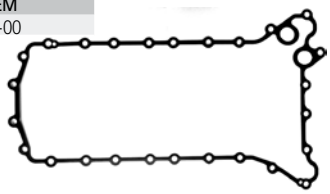

REF	OEM
REC6AW-14613-00	6AW-14613-00

FL/F300-350 (2008-11)



REF	OEM
REC6E5-45114-00	6E5-45114-A0

115A/ETN
E115AEL
140AETO



REF	OEM
REC6AW-14623-00	6AW-14623-00

FL/F300-350 (2008-11)



JUNTAS DEL SISTEMA DE ADMISIÓN | GASKETS INTAKE | GUARNIZIONE SISTEMA ASPIRAZIONE | JOINTS D'ADMISSION

REF	OEM
REC69J-13645-00	69J-13645-A1

F200/FL-LF200 (2002-11)
F225/LF-FL225 (2002-11)



REF	OEM
REC69J-15451-00	69J-15451-A1

F200/FL-LF200 (2002-11)
F225/LF-FL225 (2002-11)

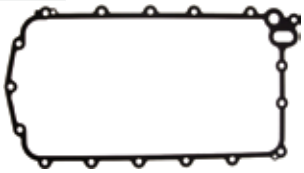

REF	OEM
REC6G1-13645-A1	6G1-13645-A1

6D/DMH/CMH//MH/C/TRV
8C/CMH/MH/MSH



REF	OEM
REC6G1-14198-A1	6G1-14198-A1

6D/DMH/CMH//MH/C/TRV
8C/CMH/MH/MSH



REF	OEM
REC6G1-13621-A1	6G1-13621-A1

6D/DMH/CMH//MH/C/TRV
8C/CMH/MH/MSH



REF	OEM
REC6G8-14198-A0	6G8-14198-00

F8BE/BM/B
F9.9B/BE/BM/A/AM



REF	OEM
REC6G8-13645-00	6G8-13645-00

F8BE/BM/B
F9.9B/BE/BM/A/AM



REF	OEM
REC6G8-13646-A0	6G8-13646-00

F8BE/BM/B
F9.9B/BE/BM/A/AM



REF	OEM
REC6G8-15374-00	6G8-15374-00

F8BE/BM/B
F9.9B/BE/BM/A/AM



REF	OEM
REC677-24434-02	677-24434-02

E8D/DMH
9.9D/15D
25D/NH/NMH/MH/NE/NEMO
20DMH/MLH/DW



REF	OEM
REC677-13621-00	677-13621-A1

20CM/C
25DE/BMH/B/D/V
30A/HM/HW/G/GE
E30HMH



REF	OEM
REC677-14198-A1	677-14198-A1

20CM/C
25DE/BMH/B/D/V
30A/HM/HW/G/GE
E30HMH



REF	OEM
REC682-13621-00	682-13621-A0

9.9D
15D



REF	OEM
REC648-13645-A0	648-13645-A0

20CM/C
25DE/BMH/B/D/V
30A/HM/HW/G/GE, E30HMH



REF	OEM
REC648-13621-A0	648-13621-A1

20CM/C
25DE/BMH/B/D/V
30A/HM/HW/G/GE
E30HMH

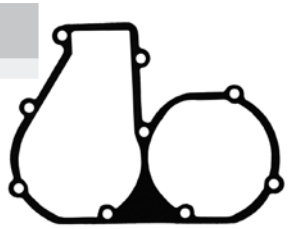

YAMAHA

RECAMBIOS MARINOS

REF	OEM
REC648-14198-A0	648-14198-A0

20C/CM
25D/DE
30A



REF	OEM
REC6H4-14198-01	6H4-14198-01

25Q/QEO/B
50D/G/GEO/GET/H
40V/VM/TLR/H
C40T/40YET
60FEO/FET/D
70B/BE



new

REF	OEM
REC6L2-13621-00	6L2-13621-00

25N/M 6L2-6L29, 6L2A - 6L2D
(1988-13)

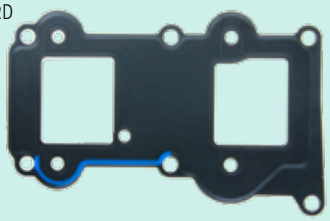

REF	OEM
REC61N-14198-00	61N-14198-00

25VE/VM/B/BMH/BWH
E25A/BMH
30G/GE/HMH/HW
E30HMH



REF	OEM
REC6H3-13621-A1	6H3-13621-A1

25B
50G/GEO/GETO,
60FEO/FETO/TLR/TRZ/F
E60H/E60M
70BEO/B/BE/
BEDO/BETO/TR



REF	OEM
REC6H3-14198-A1	6H3-14198-A1

25B
50G/GEO/GETO
60FEO/FETO/TLR/TRZ/F
E60H/E60M
70BEO/B/BE/
BEDO/BETO/TR



REF	OEM
REC6H3-13622-A1	6H3-13622-A1

25B
50G/GEO/GETO
60FEO/FETO/TLR/TRZ/F
E60H/E60M
70BEO/B/BE/BEDO/BETO/TR



REF	OEM
REC6H4-14198-09	6H4-14198-00

40N/H/E
50D/ETN



REF	OEM
REC676-13646-A0	676-13646-A0

40QE/QM/QWC



REF	OEM
REC688-14483-A0	688-14483-A0

E40CMH
55B/BE/BET
E55CMH



REF	OEM
REC688-14416-01	688-14416-01

75AET/AEM/AED
E75B
85A/AE/AET/AED

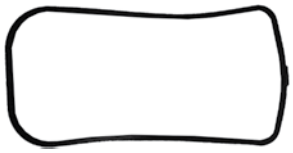

REF	OEM
REC688-13621-A1	688-13621-A1

75AET/AEM/AED
E75B
85A/AE/AET/AED



REF	OEM
REC688-14198-A1	688-14198-A2

Z150P/Q/TLR
175G/GET
200NETO/N/TR/PET
250G/GET/B



REF	OEM
REC6F5-13645-A0	6F5-13645-A1

40GWH/JWH
E40GMH/JMH



REF	OEM
REC6F5-13646-A2	6F5-13646-A1

40GWH/JWH
E40GMH/JMH



REF	OEM
REC6F5-13621-A1	6F5-13621-A1

40GWH/JWH
E40GMH/JMH



REF	OEM
REC6F5-14198-A1	6F5-14198-A1

40GWH/JWH
E40GMH/JMH



REF	OEM
REC6E9-14198-A0	6E9-14198-A0

40QE/QM/QWC



REF	OEM
REC663-14483-A0	663-14483-A0

E40CMH
55B/BE/BET
E55CMH



REF	OEM
REC663-14198-00	663-14198-A0

E48CMHS
55BET/B/BE/BM



REF	OEM
REC663-13621-00	663-13621-A0

E48CMHS
55BET/B/BE/BM



REF	OEM
REC6E5-13645-A1-00	6E5-13645-A1

100A/TLR
115BE/B/CETO/TXR
130BETO/TLR
150F/FETO/TXR/TR/GETO/A/AETO
175DETO/D/FETO
225DET/D

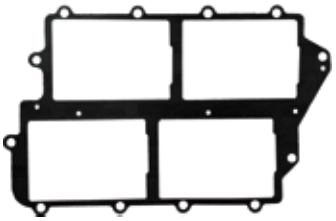

REF	OEM
REC6E5-13621-A1	6E5-13621-A1

100A/TLR
115BE/B/CETO/TXR
130BETO/TLR
150F/FETO/TXR/TR/GETO/A/AETO
175DETO/D/FETO
225DET/D



REF	OEM
REC6E5-14198-A2	6E5-14198-A2

100A/TLR
115BE/B/CETO/TXR
130BETO/TLR
150F/FETO/TXR/TR/GETO/A/AETO
175DETO/D/FETO
225DET/D



REF	OEM
REC6E5-14416-A1	6E5-14416-A1

115B/BE/BET
C115TLR

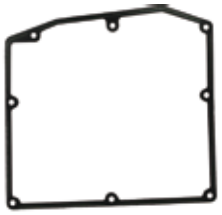

REF	OEM
REC6E5-11381-A1	6E5-11381-A1

115BET/CEO
130BET
150CET
175BET
200CETO
225BET



REF	OEM
REC6E5-14483-A1	6E5-14483-A1

115B/BE/BET
C115TLR



REF	OEM
REC65L-13646-00	65L-13646-00

150PETO/QETO/TXR
175GETO
200N/NETO/PET/TLR
225G/GET

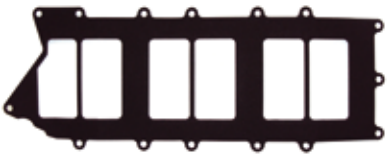

REF	OEM
REC65L-13645-00	65L-13645-00

150PETO/QETO/TXR
175GETO
200N/NETO/PET/TLR
225G/GET



REF	OEM
REC6G5-14416-A1	6G5-14416-A1

150A-AET

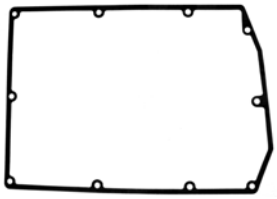

RECAMBIOS MARINOS

REF	OEM
REC6G5-14483-01	6G5-14483-A1

150A/AETO
175AE/AETO
200AET/AETO



REF	OEM
REC6G5-13645-A1	6G5-13645-A2

150A/AETO
175AE/AETO
200AET/AETO

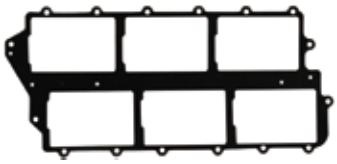

REF	OEM
REC64E-13645-A0	64E-13645-A0

150GETO
D150H 175DET
200GETO/G
225D/DET



REF	OEM
REC61A-13621-A0	61A-13621-A0

Z150P/Q/TLR
175G/GET
200NETO/N/TR/PET
250G/GET/B



REF	OEM
REC61A-11381-A0	61A-11381-A0

225C/CET/FET/G/GET
250AET/B

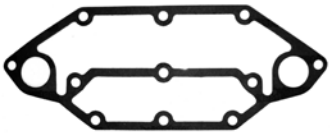

REF	OEM
REC61A-13645-00	61A-13645-00

225C/CET
250AET/B/A/ETD



REF	OEM
REC61A-13646-00	61A-13646-00

225C/CET
250AET/B/A/ETD

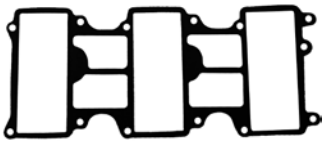

REF	OEM
REC68F-11381-00	68F-11381-00

Z150
VZ150
LZ150
Z175
VZ175

Z200
VZ200
LZ200



REF	OEM
REC6K7-13645-A2	6K7-13645-A2

200CETO
225BET



REF	OEM
REC6K7-13646-A2	6K7-13646-A2

200CETO
225BET

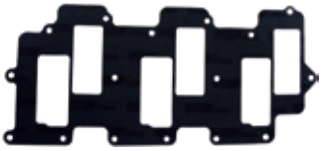

REF	OEM
REC60V-13621-A0	60V-13621-A0

Z300AETO/TR
Z250DETO/TR/FETO
LZ250 (2003-07)
LZ300 (2004-07)
VZ200 (2005-09)
VZ225 (2003-09)
VZ300 (2004-09)
VZ250 (2003-07)
Z300 (2004-07)



REF	OEM
REC60V-13645-00	60V-13645-00

Z300AETO/TR
Z250DETO/TR/FETO
LZ250 (2003-07)
LZ300 (2004-07)
VZ200 (2005-09)
VZ225 (2003-09)
VZ300 (2004-09)
VZ250 (2003-07)
Z300 (2004-07)



COLA COMPLETA — COMPLETE GEARCASE ASSY — PIEDI COMPLETI — EMBASE COMPLETE

COLAS DE 4 TIEMPOS — 4 STROKES GEARCASE — PIEDI 4 TEMPI — EMBASES DE MOTEUR 4T

4T STROKES

REF	OEM		REDUCCIÓN GEAR RATIO RIDUZIONE REDUCTION
PAF2.6-03020000S	69M-65300-01-4D	17"	2.08
PAF2.6-03020000L	69M-65300-11-4D	22"	2.08

F2.5 (2003+)

P. 283



REF	OEM		REDUCCIÓN GEAR RATIO RIDUZIONE REDUCTION
PAF15-06100000S	66M-45300-02-4D	17.3"	2.08
PAF15-06100000L	66M-45300-11-4D	22.3"	2.08

F9.9 (1998-2008)
F13.5 (2002-2007)
F15 (1998-2007)

P. 291

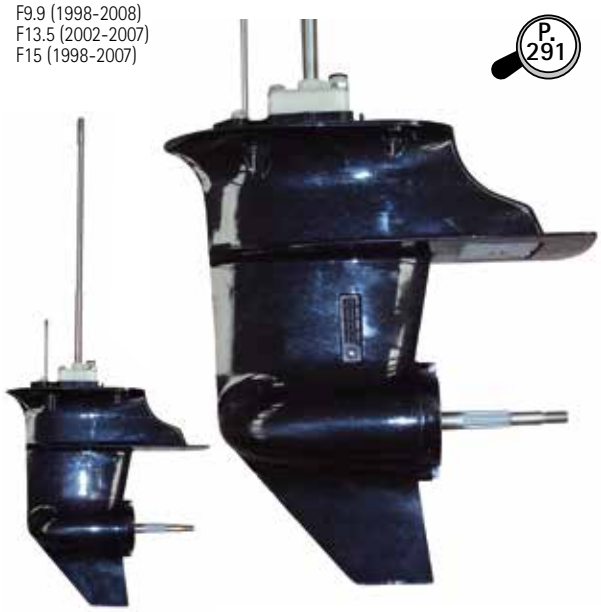

REF	OEM		REDUCCIÓN GEAR RATIO RIDUZIONE REDUCTION
PAF4-0310000S	68D-65300-03-4D	17.1"	2.08
PAF4-0310000L	68D-65300-11-4D	22.1"	2.08

F4 (1998-2009)

P. 284



new

REF	OEM		REDUCCIÓN GEAR RATIO RIDUZIONE REDUCTION
PAF20-04000000S	6AH-45300-00-4D 6AH-45300-00-8D	17.1"	2.08
PAF20-04000000L	6AH-45300-10-4D 6AH-45300-10-8D	22.1"	2.08

F9.9 (2009-18)
F13.5 (2007-09)
F15 (2007-18)
F20 (2007-18)

P. 292



REF	OEM		REDUCCIÓN GEAR RATIO RIDUZIONE REDUCTION
PAF25-04090000S	65W-45300-01-4D	16.6"	2.08
PAF25-04090000L	65W-45300-01-4D	21.6"	2.08

F20 (1998-2003)
F25 (1998+)

P. 294



new

REF	OEM		REDUCCIÓN GEAR RATIO RIDUZIONE REDUCTION
PAF60-04000000	69W-45300-00-4D 69W-45300-00-8D 69W-45300-01-8D	20"	1.85

F40D/H (2006+)
F50F/H/T (2005+)
F60A/B/C/T (2002+)

P. 310

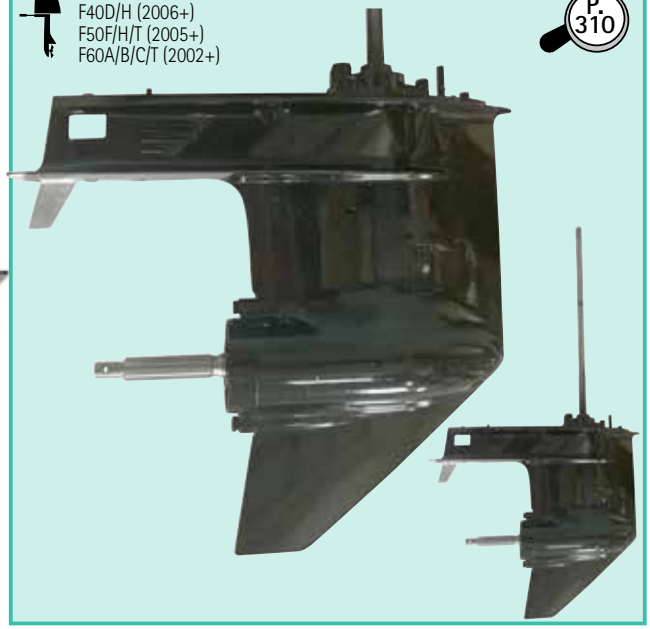

STD	CONTRAROTACIÓN COUNTERROTATION CONTROROTANTE CONTRE ROTATION	OEM		REDUCCIÓN GEAR RATIO RIDUZIONE REDUCTION
REC416-B20F		63P-45300-00-8D	20" V6 90°	2.0:1
REC416-B25F		63P-45300-10-8D	25" V6 90°	2.0:1
	REC418-B25F	64P-45300-10-8D	25" V6 90°	2.0:1

20" --> F150HP
25" --> LF150 HP
V6

P. 326





DUAL WATER PICKUP

new

STD	CONTRAROTACIÓN COUNTERROTATION CONTROROTANTE CONTRE ROTATION	OEM		REDUCCIÓN GEAR RATIO RIDUZIONE REDUCTION
REC422-B25F		6P2-45300-20-8D 6P2-45300-21-8D	25"	2.00:1
	REC429-B25F	6P3-45300-40-8D 6P3-45300-41-8D	25"	2.00:1

F200
F250



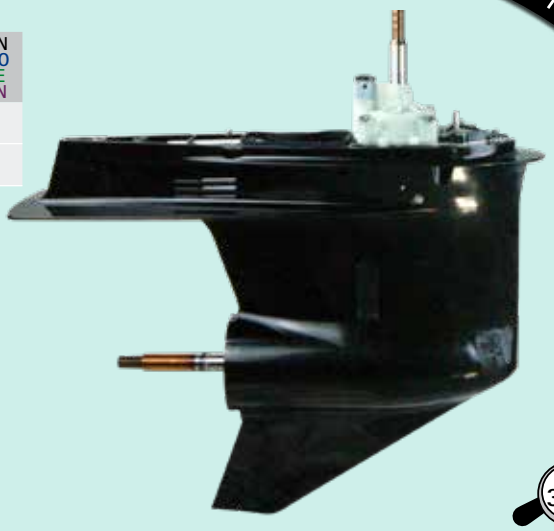

P. 336

STD	CONTRAROTACIÓN COUNTERROTATION CONTROROTANTE CONTRE ROTATION	OEM		REDUCCIÓN GEAR RATIO RIDUZIONE REDUCTION
REC421-B25F		69J-45300-21-8D	25" V6 76°	2.0:1
REC421-B30F			30" V6 76°	2.0:1
	REC428-B25F	69K-45300-21-8D	25" V6 90°	2.0:1
	REC428-B30F	69K-45300-34-8D	30" V6	2.0:1

F200 HP
F225 HP





P. 330

2T STROKES

COLAS DE 2 TIEMPOS — 2 STROKES GEARCASE — PIEDI 2 TEMPI — EMBASES DE MOTEUR 2 TEMPS

REF	OEM		REDUCCIÓN GEAR RATIO RIDUZIONE REDUCTION
REC63V-45300-13-8D	63V-45300-13-8D 63V-45300-13-4D 63V-45300-10-4D	L 22.3"	2.08
REC63V-45300-03-8D	63V-45300-03-8D 63V-45300-03-4D 63V-45300-00-4D	S 17.3"	2.08

9.9 /15 HP (63V & 63W) (1995+)
13.5 HP (66S)

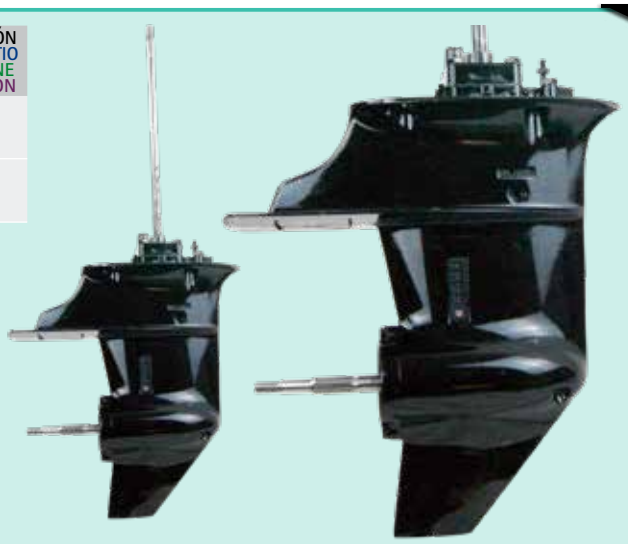

new

P. 350

REF	OEM		REDUCCIÓN GEAR RATIO RIDUZIONE REDUCTION
PAF40-04000000L	66T-45300-00-4D 66T-45311-01-4D	20"	2.08

(E)40X/M (1998-09)

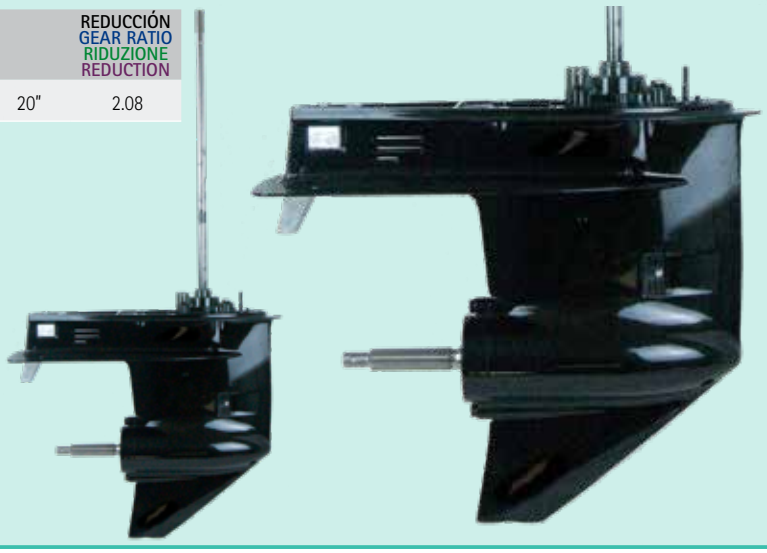

new

P. 360

REF	OEM	
REC692-45300-16-8D	692-45300-16-8D 692-45300-14-4D 692-45300-13-4D 692-45300-12-4D	L

75A (692) (1995-09)
85A (688) (1995-09)

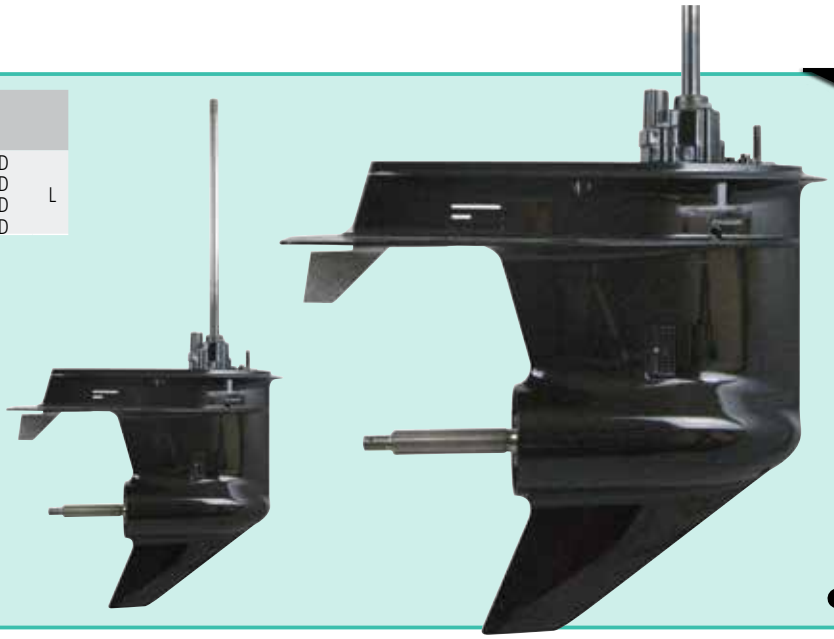

P. 370

STD	OEM		REDUCCIÓN GEAR RATIO RIDUZIONE REDUCTION
REC405-A20	6E5-45300-17-8D	20" V4	2.0:1
REC405-A25	6E5-45300-27-8D	25" V4	2.0:1

115HP (1984+)
130HP (1987+)

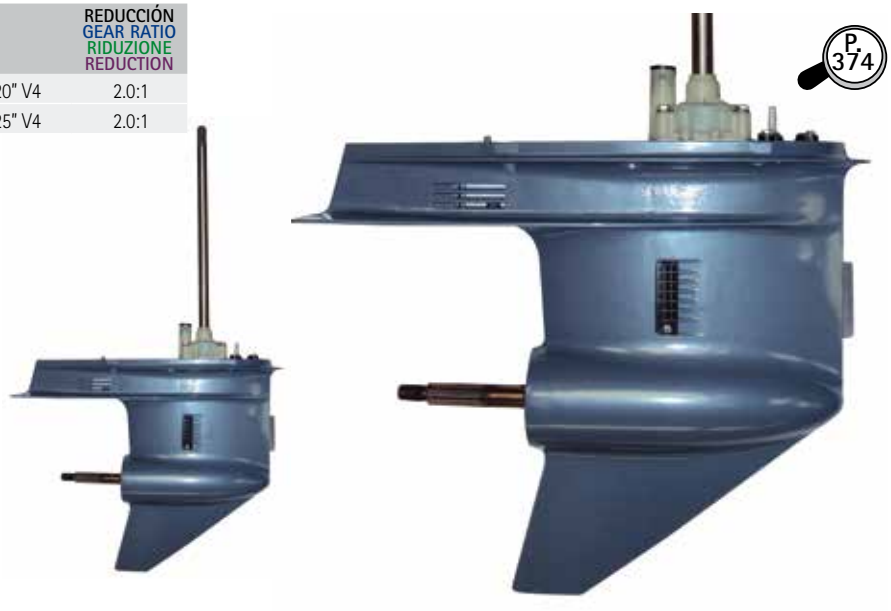

P. 374

STD	CONTRAROTACIÓN COUNTERROTATION CONTROROTANTE CONTRE ROTATION	OEM		REDUCCIÓN GEAR RATIO RIDUZIONE REDUCTION
REC416-A20		64D-45300-01-8D	20" V6 90º 2.6L	1.86:1
REC416-A25		64D-45300-21-8D	25" V6 90º 2.6L	1.86:1
	REC418-A25	64P-45300-10-8D	25" V6 90º 2.6L	1.86:1

150HP (1984+)
175HP (1984+)
200HP (1984+)
225HP (1990+)



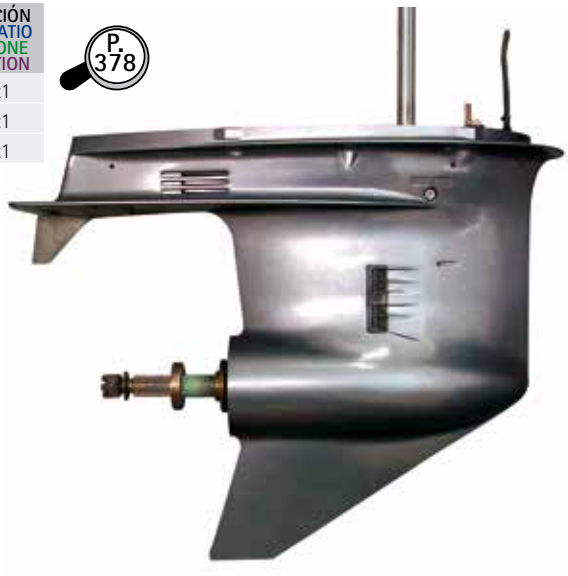

P. 378

STD	OEM		REDUCCIÓN GEAR RATIO RIDUZIONE REDUCTION
REC416-B20	64K-45300-02-NA	20" V6 90° 2.6L	2.0:1

150HP (1987+)
175HP (1989+)
200HP (1989+)
225HP (1992+)





STD	CONTRAROTACIÓN COUNTERROTATION CONTROROTANTE CONTRE ROTATION	OEM		REDUCCIÓN GEAR RATIO RIDUZIONE REDUCTION
REC421-A20		66K-45300-12-NA	20" V6 76° 3.1L / 3.2 L	1.81
REC421-A25		60V-45300-20-8D	25" V6 76°	1.81
	REC428-A25	60W-45300-20-8D	25" V6 90° 3.1L / 3.2 L	1.81

V6
250D / DETO / DETOX / TR / TXR





4T STROKES F2.5 (2003+)

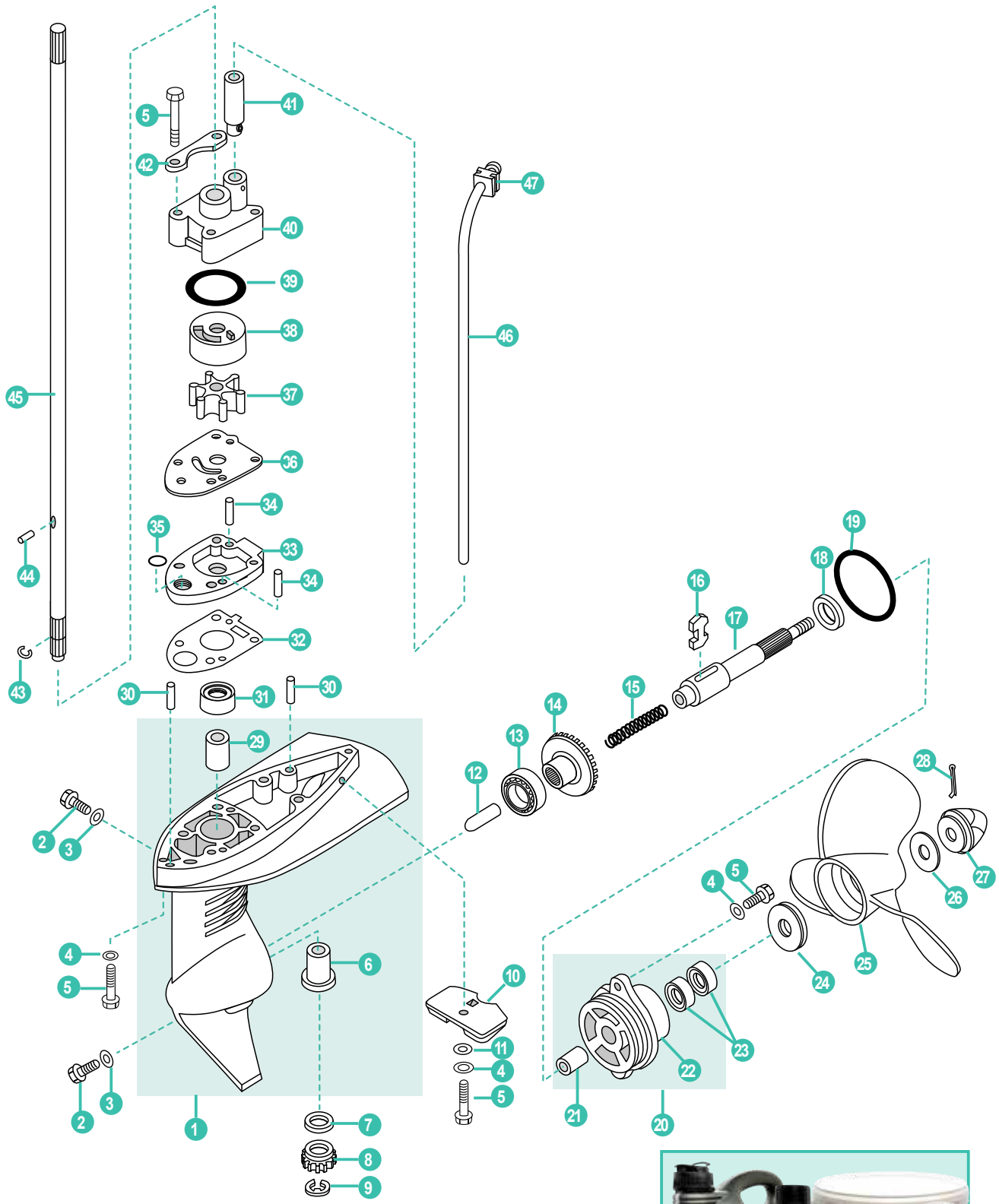



	REF	OEM				
	PAF2.6-03020000L	69M-G5300-01-4D	COLA COMPLETA L	COMPLETE GEAR HOUSING L	PIEDE COMPLETO L	EMBASE COMPLETE L
	PAF2.6-03020000S	69M-G5300-00-4D	COLA COMPLETA S	COMPLETE GEAR HOUSING S	PIEDE COMPLETO S	EMBASE COMPLETE S
1	PAF2.6-03000001	69M-G5311-00-4D	CARCASA	LOWER CASING	CARCASSA	CARTER D'EMBASE
2	REC90340-08002	90340-08002	TAPÓN ACEITE	PLUG, OIL	TAPPO OLIO	BOUCHON REMPLISSAGE D'HUILE
3	REC90430-08020	90430-08020	JUNTA	GASKET	GUARNIZIONE	JOINT
4	PAGB/T97.1-8		ARANDELA	WASHER	RONDELLA	RONDELLE
5	PAGB/T5783-M5X12	95895-06020	TORNILLO	BOLT	VITE	VIS
6	PAF2.6-03000002	6L5-45317-09	COJINETE	BEARING	CUSCINETTO	PALIER
7	PAF2.6-03000017	6L5-45533-00-20	GRUESO (2.0mm)	SHIM (2.0mm)	SPESSORE (2.0mm)	CALE (2.0mm)
8	PAF2.6-03000018	6L5-45551-00	PIÑÓN ATAQUE	INITIATIVE GEAR	PIGNONE	PIGNON D'ATTAQUE
9	PAGB/T896-86	99001-06600	CIRCLIP	CIRCLIP	CIRCLIP	CIRCLIP
10	PAF4-03000022	68D-G5251-00	ÁNODO	ANODE	ANODO	ANODE
11	PAGB/T861.1-87	92990-06300	ARANDELA	WASHER	RONDELLA	RONDELLE
12	PAF2.6-03000020	69M-G5635-00	TAPÓN CAMBIO	PLUG, SHIFT	TAPPO	BOUCHON
13	PANTN16003EY	93316-003Y0	COJINETE	BEARING	CUSCINETTO	PALIER
14	PAF2.6-03000019	6L5-45560-00	MARCHA AVANTE	POSITIVE GEAR ASSY	MARCIA AVANTI	PIGNON DE MARCHE AVANT
15	PAF4-03030003	90501-10064	MUELLE	SPRING, CLUTCH BLOCK	MOLLA	RESSORT
16	PAF2.6-03000202	6L5-45631-00	SELECTOR	CLUTCH BLOCK	SELETTORE	SELECTEUR
17	PAF2.6-030000201	6L5-45631-00	EJE HÉLICE	SHAFT, PROPELLER	ASSE ELICA	ARBRE D'HELICE
18	PAF2.6-03000021	90201-13198	ARANDELA	WASHER	RONDELLA	RONDELLE
19	PAJISB2401P48	93210-48214	TÓRICA	O-RING	O-RING	JOINT TORIQUE
20	PAF2.6-03000300		TAPA CARTER COMPLETA	COVER ASSY, LOWER CASING	COPERCHIO DE CARTER COMPLETO	DIABOLO COMPLET
21	PAF2.6-03000302		COJINETE CAMISA	BEARING, SLEEVE	CUSCINETTO ASSE	BAGUE
22	PAF2.6-03000301	69M-G5361-00-4D	TAPA CARTER	COVER, LOWER CASING	COPERCHIO CARTER	DIABOLO
23	PAF4-03050002	93101-13M12	RETÉN DE ACEITE	OIL SEAL	PARAOLIO	JOINT SPI
24	PAF4-03000025	68D-G5978-00	ESPACIADOR	SPACER	SPESSORE	ENTRETOISE
25	PAF2.6-03010000	6L5-45943-00-EL	HÉLICE	PROPELLER ASSY	ELICHE	HELICE
26	PAF4-03000026	90201-08M54	ARANDELA	WASHER	RONDELLA	RONDELLE
27	PAF4-03080000	6L5-45616-00	TUERCA	LOCK NUT	DADO	ÉCROU
28	PAGB/T91-1.6X12	91490-25030	PASADOR ALETAS	PIN, COTTER	SPINOTTO	LEVIER
29	PAF2.6-03000003	6L5-45316-09	COJINETE	BEARING	CUSCINETTO	PALIER
30	PAF15-00000013	93604-12M07	PASADOR	PIN	SPINOTTO	LEVIER
31	PAF2.6-03000004	93103-09M41	RETÉN DE ACEITE	OIL SEAL	PARAOLIO	JOINT D'HUILE
32	PAF2.6-03000007	69M-G5315-A0	JUNTA	GASKET, WATER PUMP	GUARNIZIONE	JOINT
33	PAF2.6-03000008	69M-G5321-00-94	CUERPO BOMBA	HOUSING, WATER PUMP	CORPO POMPA ACQUA	CORPS DE POMPE A EAU
34	PAF4-03000013	93604-18080	PASADOR	PIN	SPINOTTO	LEVIER
35	PAF2.6-03000009	93210-05001	TÓRICA	O-RING	O-RING	JOINT TORIQUE
36	PAF2.6-03000010	69M-G4323-00	PLACA	OUT PLATE	PIASTRA	PLAQUE
37	PAF2.6-03000100	6L5-44352-00	TURBINA	IMPELLER	GIRANTE	TURBINE
38	PAF2.6-03000015	6L5-44322-00	TAPA BOMBA AGUA	COVER, INNER WATER PUMP	TAPPO	COUVERCLE DE POMPE D'EAU
39	PAJASOF404-19-033	93210-33M85	TÓRICA	O-RING	O-RING	JOINT TORIQUE
40	PAF2.6-03000014	69M-G4311-00	CUERPO BOMBA	WATER PUMP HOUSING	CORPO POMPA ACQUA	CORPS DE POMPE A EAU
41	PAF4-03000021	6R0-44366-00	TUBO BOMBA AGUA	RUBBER TUBE, WATER PUMP	TUBO POMPA ACQUA	TUBE DE POMPE A EAU
42	PAF2.6-03000016	69M-G4328-00	PLATO BOMBA DE AGUA	PLATE, WATER PUMP FIXED	PIASTRA	PLAQUE, POMPE D'EAU
43	PAF2.6-03000012	93440-08819	CIRCLIP	CIRCLIP	CIRCLIP	CIRCLIP
44	PAF2.6-03000013	93604-07M13	PASADOR	PIN	SPINOTTO	LEVIER
45	PAF2.6-03000011S	69M-G5511-00	EJE VERTICAL S	DRIVE SHAFT S	ASSE VERTICALE S	ARBRE DE COMMANDE S
	PAF2.6-03000011L	69M-G5511-10	EJE VERTICAL L	DRIVE SHAFT L	ASSE VERTICALE L	ARBRE DE COMMANDE L
46	PAF2.6-02000003S	69M-44361-00	TUBO DE AGUA S	WATER TUBE S	TUBO DELL'ACQUA S	DURITE D'EAU S
	PAF2.6-02000003L	69M-44361-10	TUBO DE AGUA L	WATER TUBE L	TUBO DELL'ACQUA L	DURITE D'EAU L
47	PAF4-02040002	68D-G4365-00	GOMA DEL TUBO DE AGUA	I-SHAPED RUBBER BAND	GOMMA TUBO ACQUA	PLOT CAOUTCHOUC DE TUBE D'EAU

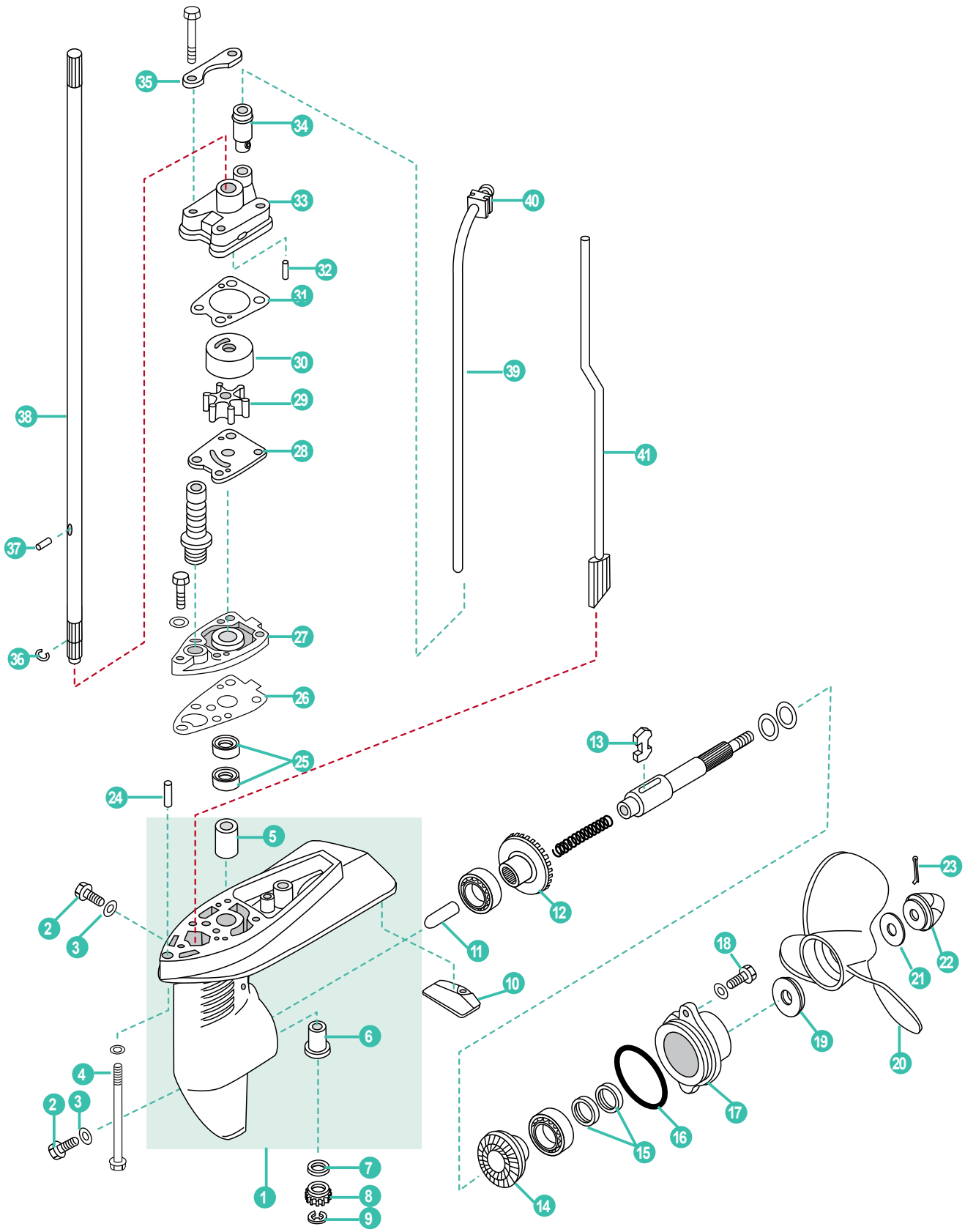
35
34
33
32
31
30
29
28
27
26
25
24
38
37
36
40
39
41
13
12
11
10
5
2
3
6
4
2
3
1
7
8
9
18
19
20
21
22
23
17
16
15
14

	REF	OEM				
	PAF4-0310000L	68D-G5300-10-4D	COLA COMPLETA L	COMPLETE GEAR HOUSING L	PIEDE COMPLETO L	EMBASE COMPLETE L
	PAF4-0310000S	68D-G5300-00-4D	COLA COMPLETA S	COMPLETE GEAR HOUSING S	PIEDE COMPLETO S	EMBASE COMPLETE S
1	PAF4-03000001	68D-G5300-11-4D	CARCASA MOTOR	CRANK CASE	CARCASSA	CARTER D'EMBASE
2	REC90340-08002	90340-08002	TAPÓN ACEITE	PLUG, OIL	TAPPO OLIO	BOUCHON REMPLISSAGE D'HUILE
3	REC90430-08020	90430-08020	JUNTA	GASKET	GUARNIZIONE	JOINT
4	PAGB/T5782-M6X125		TORNILLO HEXAGONAL L	HEXAGON BOLT L	VITE L	VIS L
4	PAGB/T5782-2000S		TORNILLO HEXAGONAL S	HEXAGON BOLT S	VITE S	VIS S
5	PAF4-03000003	6E0-45316-09	RODAMIENTO	BALL BEARING	CUSCINETTO	ROULEMENT À BILLE
6	PAF4-03000002	6E0-45317-09	COJINETE	BEARING	CUSCINETTO	PALIER
7	PAF4-03000006	90204-11M49	ARANDELA	WASHER	RONDELLA	RONDELLE
8	PAF4-03000007	6E0-45551-00	PIÑÓN ATAQUE	INITIATIVE GEAR	MARCIA INIZIATIVA	PIGNON D'ATTAQUE
9	PAGB/T896-86	99001-06600	CIRCLIP	CIRCLIP	CIRCLIP	CIRCLIP
10	PAF4-03000022	68D-G5251-00	ÁNODO	ANODE	ANODO	ANODE
11	PAF4-03000008	67D-45635-00	ÉMBOLO	PLUGER, SHIFT	BULLONE	BOUCHON
12	PAF4-03010000	67D-45560-00	MARCHA AVANTE	POSITIVE GEAR ASSY	MARCIA AVANTI	PIGON DE MARCHE AVANT
13	PAF4-03030002	67D-45631-01	SELECTOR	CLUTCH BLOCK	SELETTORE	SELECTEUR
14	PAF4-03040000	67D-45570-00	MARCHA INVERSA	REVERSE GEAR ASSY	RETROMARCIA	PIGON DE MARCHE ARRIERE
15	PAF4-03050002	93101-13M12	RETÉN DE ACEITE	OIL SEAL	PARAOLIO	JOINT SPI
16	PAJISB2401P48	93210-48214	TÓRICA	O-RING	O-RING	JOINT TORIQUE
17	PAF4-03050001	68D-G5361-00-4D	TAPA CÁRTER	COVER, LOWER CASING	TAPPO CARTER	DIABOLO
18	PAGB/T5783-M5X12	95895-06016-00	TORNILLO HEXAGONAL	HEXAGON BOLT M6x18	VITE	VIS
19	PAF4-03000025	68D-G5987-00	ESPACIADOR	SPACER	DISTANZIALE	ENTRETOISE
20	PAF4-03070000	6E0-45943-01-EL	HÉLICE	PROPELLER	ELICHE	HELICE
21	PAF4-03000026	90201-08M54	ARANDELA INOX.	WASHER, STAINLESS STEEL	RONDELLA INOX.	RONDELLE INOX
22	PAF4-03080000	6L5-45616-00	TUERCA	LOCK NUT	DADO	ÉCROU
23	PAGB/T91-1.6X12	91490-25030	PASADOR ALETAS	PIN, COTTER 2.5x30	PIN	PIN
24	PAF4-00000001	90387-06806	PASADOR VACÍO	HOLLOW PIN	SPINOTTO	GUIDE
25	PAF4-03000027	93101-10M14	RETÉN DE ACEITE	OIL SEAL	PARAOLIO	JOINT SPI
26	PAF4-03000011	68D-G5315-A0	JUNTA HERMÉTICA BASE	HERMETIC GASKET, WATER PUMP BASE	GUARNIZIONE BASE POMPA ACQUA	JOINT DE BASE DE POMPE A EAU
27	PAF4-03000012	68D-G5321-00	BASE BOMBA AGUA	BASE, WATER PUMP	BASE POMPA	BASE DE POMPE A EAU
28	PAF4-03000015	6E0-44323-00	PLACA	OUT PLATE	PIASTRA	PLAQUE
29	PAF4-03060000	6E0-44352-00	TURBINA BOMBA AGUA	IMPELLER, WATER PUMP	GIRANTE POMPA	TURBINE, POMPE D'EAU
30	PAF4-03000017	6E0-44322-02	TAPA, BOMBA AGUA	COVER, INNER WATER PUMP	COPERCHIO, POMPE D'EAU	COUVERCLE, POMPE D'EAU
31	PAF4-03000018	68D-G4315-A0	JUNTA TAPA BOMBA AGUA	GASKET, WATER PUMP COVER	GUARNIZIONE COPERCHIO	JOINT COUVERCLE
32	PAF4-03000013	93604-18080	PASADOR BOMBA AGUA	PIN, WATER PUMP	SPINOTTO POMPA ACQUA	LEVIER POMPE D'EAU
33	PAF4-03000019	68D-G4311-01	CUERPO BOMBA AGUA	HOUSING, WATER PUMP	CORPO POMPA	LOGEMENT POMPE D'EAU
34	PAF4-03000021	67D-44366-00	TUBO GOMA BOMBA AGUA	RUBBER TUBE, WATER PUMP	TUBO IN GOMMA, POMPA	DURITE DE COUTCHOUC
35	PAF4-03000020	68D-G4328-00	PLCA BOMBA AGUA	PLATE, WATER PUMP FIXED	PIASTRA POMPA	PLAQUE ,POMPE D'EAU
36	PAF4-03000005	90467-08M01	CLIP	CLIP	CLIP	CLIP
37	PAF4-03000016	93604-09066	PASADOR	PIN	SPINOTTO	LEVIER
38	PAF4-03000004L	6E0-45511-11	EJE VERTICAL L	DRIVE SHAFT L	ASSE VERTICALE L	ARBRE DE COMMANDE L
	PAF4-03000004S	6E0-45511-01	EJE VERTICAL S	DRIVE SHAFT S	ASSE VERTICALE S	ARBRE DE COMMANDE S
39	PAF4-02040001	68D-G4360-10	TUBO DE AGUA L	WATER TUBE L	TUBO DELL'ACQUA L	DURITE D'EAU L
39	PAF4-02040001S	68D-G4360-00	TUBO DE AGUA S	WATER TUBE S	TUBO DELL'ACQUA S	DURITE D'EAU S
40	PAF4-02040002		GOMA DEL TUBO DE AGUA	I-SHAPED RUBBER BAND	GOMMA TUBO ACQUA	PLOT CAOUTCHOUC DE TUBE D'EAU
41	PAF4-03020000L	68D-G4150-10	VARILLA SELECTOR L	CAM ASSY, SHIFT ROD L	ASTICELLA CAMBIO L	LEVIER DE VITESSE L
	PAF4-03020000S	68D-G4150-00	VARILLA SELECTOR S	CAM ASSY, SHIFT ROD S	ASTICELLA CAMBIO S	LEVIER DE VITESSE S

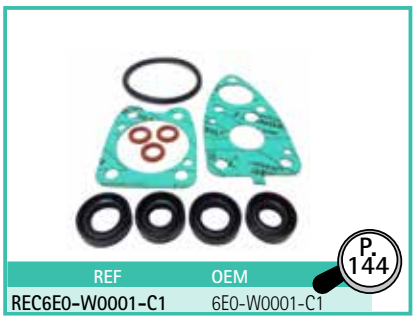

REF	OEM
REC6E0-W0001-C1	6E0-W0001-C1

P. 144



REF	OEM
REC6E0-W0078-A2	6E0-W0078-A2

P. 150



REC80W90U3
REC80W90U6
RECGREU1
RECGREU12

P. 43

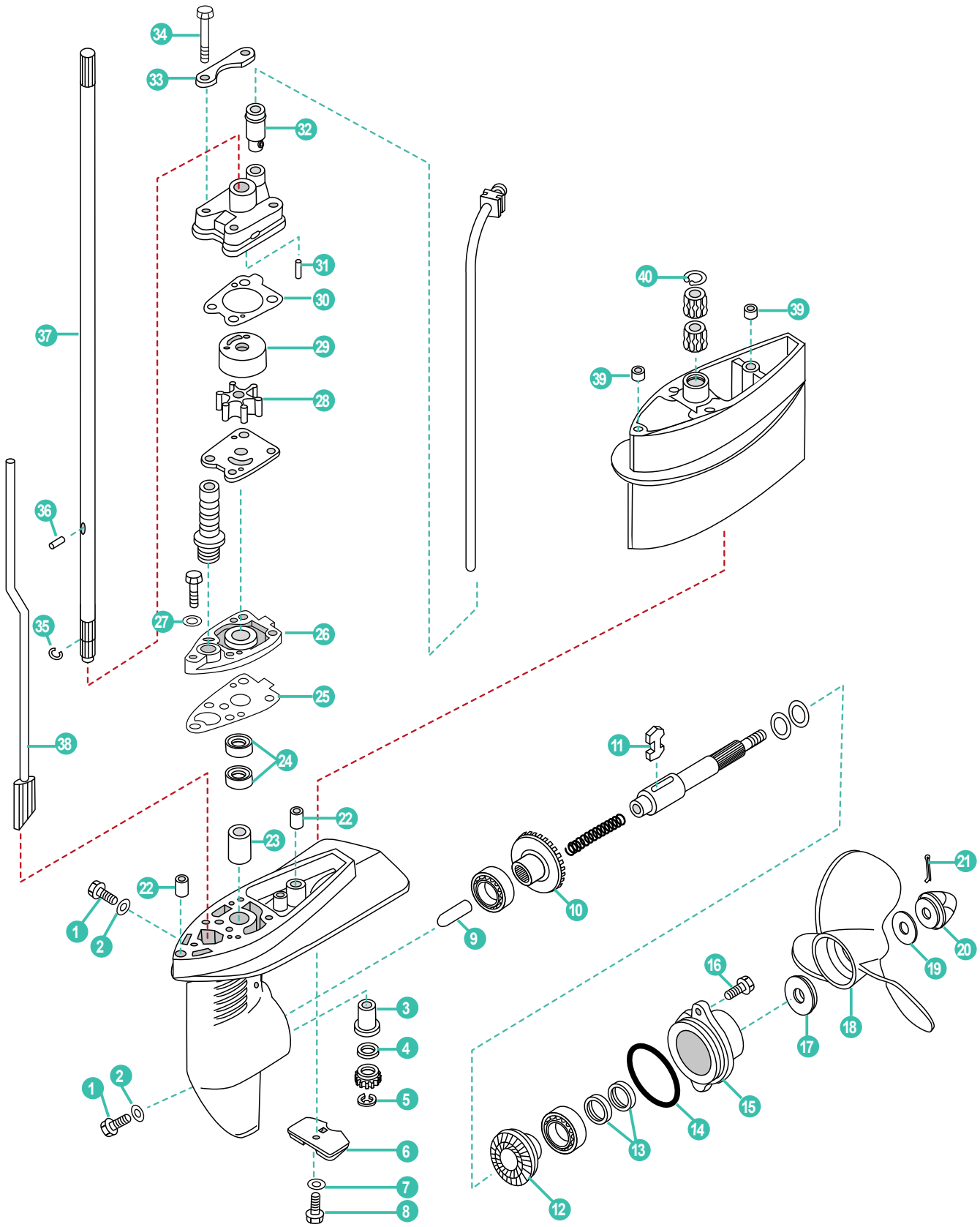
34
33
32
31
30
29
28
27
26
25
24
23
22
22
21
20
19
18
17
16
15
14
13
12
11
10
9
40
39
39
38
37
36
35
1
2
1
2
3
4
5
6
7
8

	REF	OEM				
1	REC90340-08002	90340-08002	TORNILLO DRENAJE	BOLT, DISCHARGING OIL	VITE DRENAGGIO	BOUCHON DE VIDANGE
2	REC90430-08020	90430-08020	JUNTA	GASKET	GUANIZIONE	JOINT
3	PAF4-03000002	6E0-45317-09	COJINETE	BEARING	CUSCINETTO	PALIER
4	PAF4-03000006	90201-11M49	ARANDELA	WASHER	RONDELLA	RONDELLE
5	REC99001-06600	99001-06600	CIRCLIP	CIRCLIP	CIRCLIP	CIRCLIP
6	CM6L5-45251-02A	68D-G5251-00	ÁNODO	ANODE	ANODO	ANODE
7	PAGB/T861.1-87	92990-06300	ARANDELA	WASHER	RONDELLA	RONDELLE
8	PAGB/T5783-M6X14	95895-06012	TORNILLO	SCREW	VITE	VIS
9	PAF4-03000008	67D-45635-00	ÉMBOLO	PLUGER, SHIFT	BULLONE	AXE DE VERROUILLAGE DU CRABOT
10	PAF4-03010000	67D-45560-00	MARCHA AVANTE	POSITIVE GEAR ASSY	MARCIA AVANTI	PIGNON MARCHE AV
11	PAF4-03030002	67D-45631-01	SELECTOR	CLUTCH BLOCK	SELETTORE	BLOQUEUR
12	PAF4-03040000	67D-45570-00	MARCHA INVERSA	REVERSE GEAR ASSY	RETROMARCIA	PIGNON MARCHE AR
13	REC93101-13M12	93101-13M12	RETÉN DE ACEITE	OIL SEAL	PARAOLIO	JOINT SPI
14	REC93210-48214	93210-48214	TÓRICA	O-RING	O-RING	JOINT TORIQUE
15	PAF4-03050001	68D-G5361-00-4D	TAPA CÁRTER	COVER, LOWER CASING	COPERCHIO CARTER	DIABOLO
16	PAGB/T5783-M5X12	95895-06016	TORNILLO HEXAGONAL	HEXAGON BOLT M6x18	VITE	VIS
17	PAF4-03000025	68D-G5987-00	ESPACIADOR	SPACER	DISTANZIALE	ENTRETOISE
18	PAF4-03070000	6E0-45943-01	HÉLICE	PROPELLER	ELICHE	HELICE
18	PAF2.6-03010000	6E0-45949-00	HÉLICE	PROPELLER	ELICHE	HELICE
19	PAF4-03000026	90201-08M54	ARANDELA INOX.	WASHER, STAINLESS STEEL	RONDELLA INOX.	RONDELLE INOX
20	PAF4-03080000	6L5-45646-00	TUERCA	LOCK NUT	DADO	ÉCROU
21	PAGB/T91-1.6X12	91490-25030	PASADOR ALETAS	PIN, COTTER 2.5x30	PIN	PIN
22	PAF4-00000001	90387-06806	ESPACIADOR	SPACER	DISTANZIALE	ENTRETOISE
23	PAF4-03000003	6E0-45316-09	RODAMIENTO	BALL BEARING	CUSCINETTO	ROULEMENT À BILLE
24	PAF4-03000027	93101-10M14	RETÉN DE ACEITE	OIL SEAL	PARAOLIO	JOINT SPI
25	PAF4-03000011	68D-G5315-A0	JUNTA BASE	GASKET, WATER PUMP BASE	GUARNIZIONE BASE POMPA ACQUA	JOINT DE POMPE À EAU
26	PAF4-03000012	68D-G5321-00	PLACA	OUT PLATE	PIASTRA	PLAQUE
27	PAGB/T97.1-6	92995-06600	ARANDELA	WASHER	RONDELLA	RONDELLE
28	REC6E0-44352-00	6E0-44352-00	TURBINA BOMBA AGUA	IMPELLER, WATER PUMP	GIRANTE POMPA	TURBINE DEPOMPE A EAU
29	PAF6-03000002	6BX-44322-00	TAPA, BOMBA AGUA	COVER, INNER WATER PUMP	COPERCHIO, POMPE ACQUA	INSERT DE POMPE A EAU
30	PAF4-03000018	6BX-G4315-01	JUNTA TAPA BOMBA AGUA	GASKET, WATER PUMP COVER	GUARNIZIONE COPERCHIO	JOINT COUVERCLE
31	PAF4-03000013	93604-18080	PASADOR BOMBA AGUA	PIN, WATER PUMP	SPINOTTO POMPA ACQUA	PIN DE POMPE A EAU
32	PAF4-03000021	67D-44366-00	TUBO GOMA BOMBA AGUA	RUBBER TUBE, WATER PUMP	TUBO IN GOMMA, POMPA	DURITE COUTCHOUC
33	PAF4-03000020	68D-G4328-00	PLCA BOMBA AGUA	PLATE, WATER PUMP FIXED	PIASTRA POMPA	PLAQUE ,POMPE A EAU
34	REC97095-06045	97095-06045	TORNILLO	SCREW	VITE	VIS
35	PAF4-03000005	90467-08M01	CLIP	CLIP	CLIP	CLIP
36	PAF4-03000016	93604-09066	PASADOR	PIN	SPINOTTO	CLAVETTE
37	PAF4-03000004S	68D-G5511-00	EJE VERTICAL S	DRIVE SHAFT S	ASSE VERTICALE S	ARBRE DE COMMANDE S
37	PAF4-03000004L	68D-G5511-10	EJE VERTICAL L	DRIVE SHAFT L	ASSE VERTICALE L	ARBRE DE COMMANDE L
38	PAF4-03020000S	6BX-G4150-00	EJE LEVA COMPLETO S	CAM ASSY, SHIFT ROD S	ASSE LEVA COMPLETO S	LEVIER DE VITESSE S
38	PAF4-03020000L	6BX-G4150-10	EJE LEVA COMPLETO L	CAM ASSY, SHIFT ROD L	ASSE LEVA COMPLETO L	LEVIER DE VITESSE L
39	PAF4-00000001	90387-06806	ESPACIADOR	SPACER	DISTANZIALE	ENTRETOISE
40	PAGB/T893.1-22	93420-22M03	SEGURO	CLAMP	BLOCCAGGIO	CLAVETTE



REC80W90U3
REC80W90U6
RECGREU1
RECGREU12

P. 43

4T STROKES F6A/M • F8C/M/F • F9.9F/J

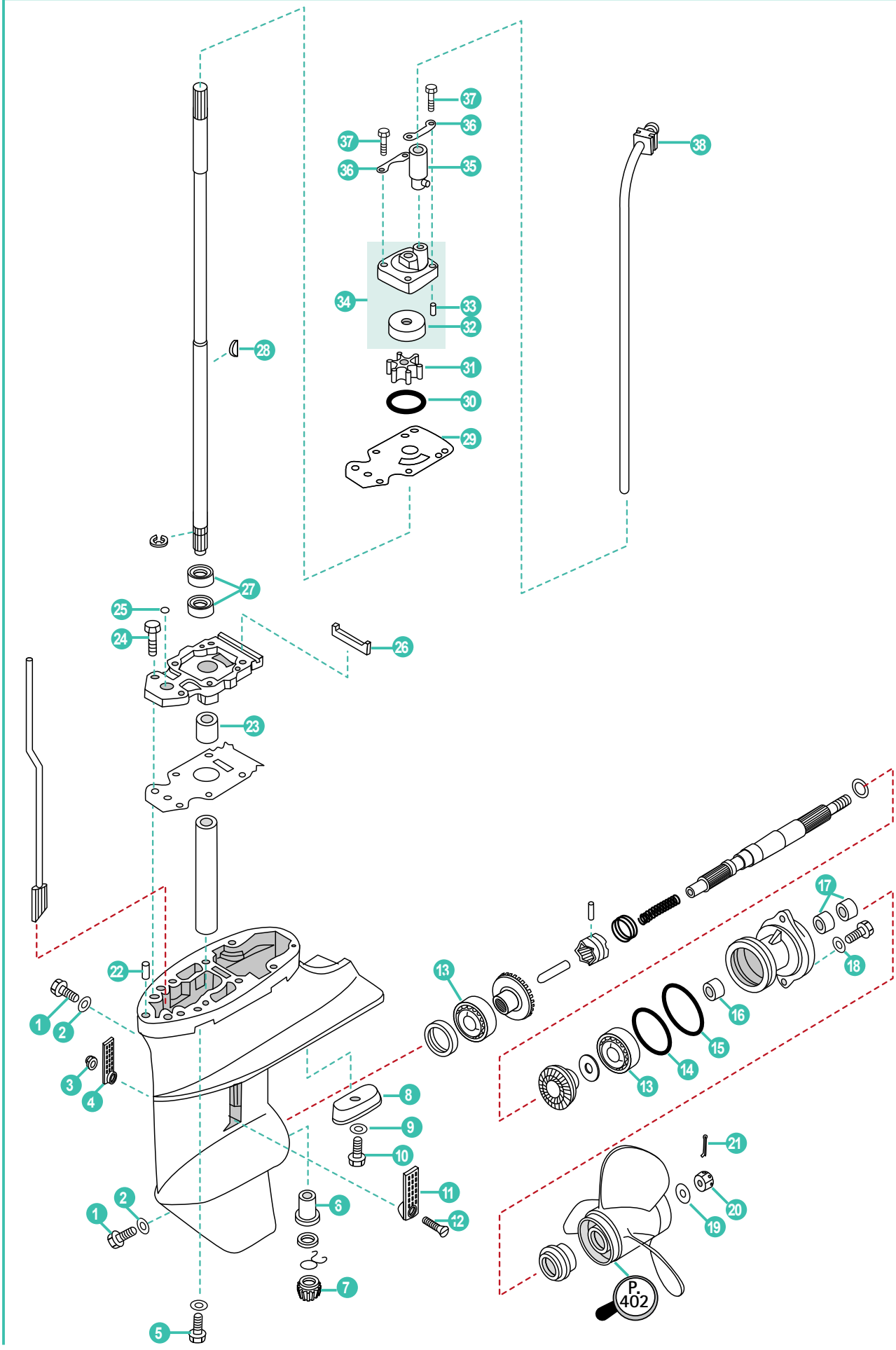

	REF	OEM				
1	REC90340-08002	90340-08002	TORNILLO DRENAJE	BOLT, DISCHARGING OIL	VITE DRENAGGIO	BOUCHON DE VIDANGE
2	REC90430-08020	90430-08020	JUNTA	GASKET	GUANIZIONE	JOINT
3	PAGB/T6182-M5	90185-05002	TUERCA AUTOBLOCANTE	NUT LOCKING M5	DADO CHIUSURA M5	ECROU FREIN M5
4	PAF15-06000002	6G1-45215-00	CUBIERTA ENTRADA DE AGUA **2**	WATER INLET **2**	COPERCHIO ENTRATA ACQUA **2**	GRILLE D'ENTREE D'EAU 2
5	PAGB/T5783-M8X35	97075-08035	PERNO	STUD	BULLONE	BOULON
6	REC6G1-45317-09	6G1-45317-09	RODAMIENTO	BALL BEARING	CUSCINETTO	ROULEMENT À BILLE
7	REC68T-45551-00	6N0-G5551-A0	PIÑÓN	GEAR UNIT ASSY	PIGNONE	PIGNON
8	CM68T-45251-00A	68T-45251-00	ÁNODO	ANODE	ANODO	ANODE
9	PAGB/T861.1-87	92990-06300	ARANDELA	WASHER	RONDELLA	RONDELLE
10	PAGB/T5783-M5X12	95895-06016	TORNILLO	SCREW	VITE	VIS
11	PAF15-06000003	6G1-45214-00	CUBIERTA ENTRADA DE AGUA **1**	WATER INLET **1**	COPERCHIO ENTRATA ACQUA **1**	GRILLE D'ENTREE D'EAU **1**
12	PAGB/T820-M5X25	90152-05M03	TORNILLO	SCREW	VITE	VIS
13	PAGB/T276-6004C2	93306-004YH	COJINETE	BEARING	CUSCINETTO	PALIER
14	REC93210-49046	93210-49046	TÓRICA	O-RING	O-RING	JOINT TORIQUE
15	REC93210-53M08	93210-53M08	TÓRICA	O-RING	O-RING	JOINT TORIQUE
16	REC6G1-45362-09	6G1-45362-09	RODAMIENTO	BALL BEARING	CUSCINETTO	ROULEMENT À BILLE
17	REC93101-15074	93101-15074	RETÉN DE ACEITE	OIL SEAL	PARAOLIO	JOINT SPI
18	PAGB/T97.1-6	92995-06600	ARANDELA	WASHER	RONDELLA	RONDELLE
19	REC90201-10M01	90201-10M01	ARANDELA	WASHER	RONDELLA	RONDELLE
20	REC90171-10M01	90171-10M01	TUERCA	LOCK NUT	DADO	ÉCROU
21	REC91490-30025	91490-30020	PASADOR ALETAS	PIN, COTTER	PIN	GOUPILLE
22	PAF15-00000013	93604-12M07	PIN CENTRADOR	HOLLOW PIN	SPINOTTO DI CENTRAGGIO	PIN DE CENTRAGE
23	REC6G1-45316-09	6G1-45316-09	RODAMIENTO	BALL BEARING	CUSCINETTO	ROULEMENT À BILLE
24	PAGB/T5783-M8X25	97080-08025	PERNO	STUD	BULLONE	BOULON
25	REC93210-06ME6	93210-06ME6	TÓRICA	O-RING	O-RING	JOINT TORIQUE
26	PAF15-06020005	63V-45375-00	RETÉN DE GOMA	SEAL, RUBBER	TENUTA IN GOMMA	JOINT DE COUTCHOUC
27	REC93101-11M23	93101-11M23	RETÉN DE ACEITE	OIL SEAL	PARAOLIO	JOINT SPI
28	REC664-44338-00	664-44338-00	CUÑA	KEY WOODRUFF	CHIAVETTA	CLAVETTE
29	REC68T-44323-00	68T-44323-00	JUNTA TAPA BOMBA AGUA	GASKET, WATER PUMP COVER	GUARNIZIONE COPERCHIO	JOINT COUVERCLE
30	REC93210-44398	93210-44398	TÓRICA	O-RING	O-RING	JOINT TORIQUE
31	REC68T-44352-00	68T-44352-00	TURBINA BOMBA AGUA	IMPELLER, WATER PUMP	GIRANTE POMPA	TURBINE DE POMPE A EAU
32	REC63V-44322-00	63V-44322-00	TAPA, BOMBA AGUA	COVER, INNER WATER PUMP	COPERCHIO, POMPE ACQUA	COUVERCLE, POMPE A EAU
33	PAF15-00000013	93604-12M07	PIN CENTRADOR	HOLLOW PIN	SPINOTTO DI CENTRAGGIO	PIN DE CENTRAGE
34	REC63V-44301-00	63V-44301-00	CUERPO BOMBA AGUA	HOUSING, WATER PUMP	CORPO POMPA	CORPS DE POMPE A EAU
35	REC68T-44366-00	68T-44366-00	TUBO GOMA BOMBA AGUA	RUBBER TUBE, WATER PUMP	TUBO IN GOMMA, POMPA	DURITE COUTCHOUC
36	PAF15-06000014	63V-44328-00	PLACA	OUT PLATE	PIASTRA	PLAQUE
37	REC97080-08045	97080-08045	PERNO	STUD	BULLONE	BOULON
38	PAF15-02000006	63V-44365-10	GOMA DEL TUBO DE AGUA	I-SHAPED RUBBER BAND	GOMMA TUBO ACQUA	PLOT CAOUTCHOUC DE TUBE D'EAU





REF	OEM
REC68T-W0001-20	68T-W0001-20



REF	OEM
REC68T-W0078-00	68T-W0078-00

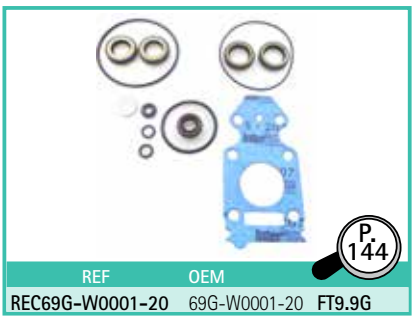

REF	OEM	
REC69G-W0001-20	69G-W0001-20	FT9.9G

4T STROKES F9.9 (1998-08) • F9.9C • F13.5 (2002-07) • F15 (1998-07) • F15A

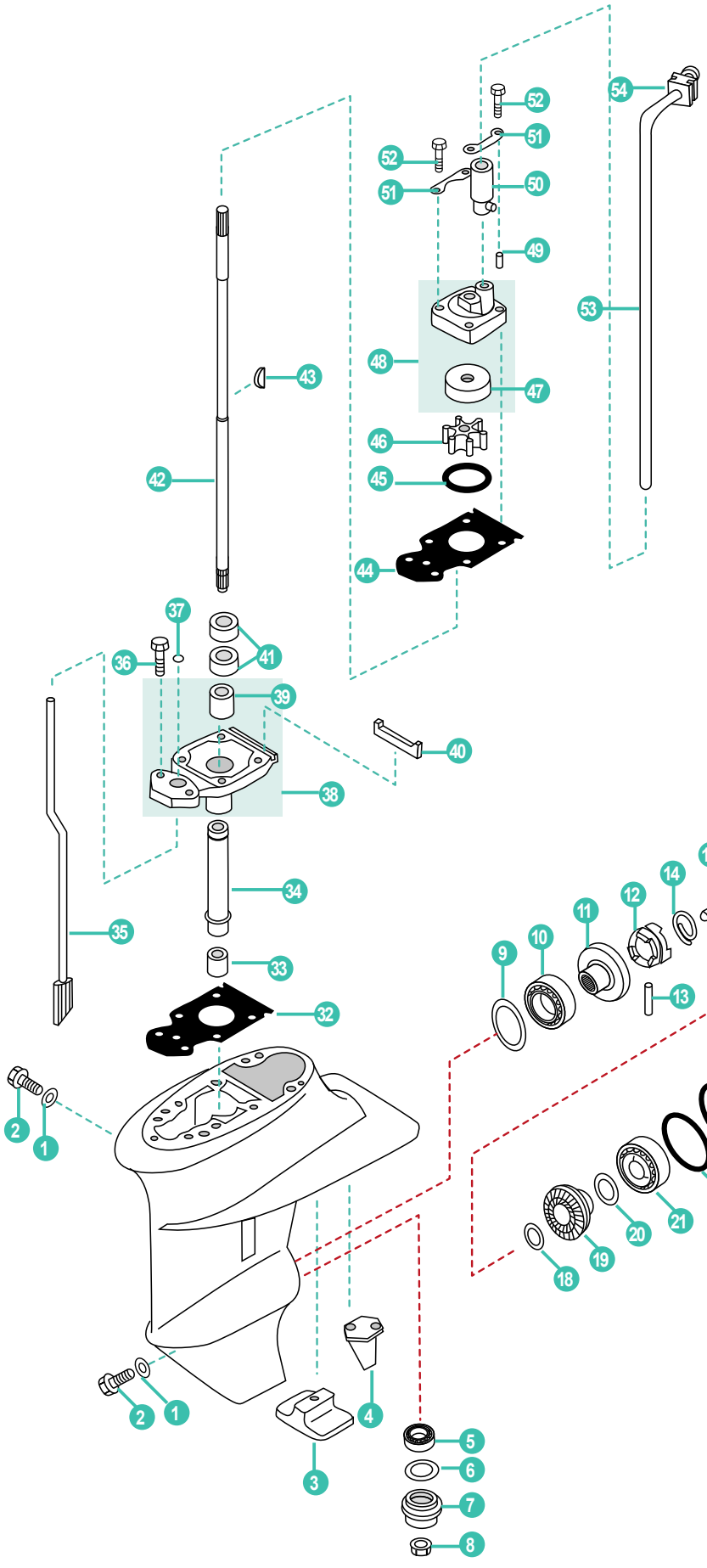



REF	OEM
REC66M-W0001-20	66M-W0001-20

P. 144



REC80W90U3
REC80W90U6
RECGREU1
RECGREU12

P. 43

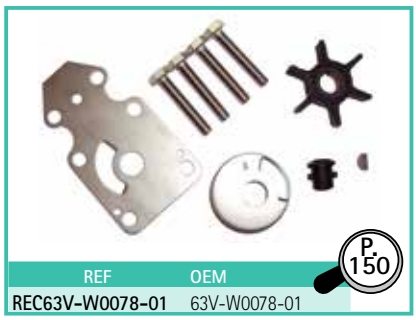

REF	OEM
REC63V-W0078-01	63V-W0078-01

P. 150

P. 402

	REF	OEM				
	PAF15-06100000L	66M-45300-11-4D	COLA COMPLETA L	COMPLETE GEAR HOUSING L	PIEDE COMPLETO L	EMBASE COMPLETE L
	PAF15-06100000S	66M-45300-02-4D	COLA COMPLETA S	COMPLETE GEAR HOUSING S	PIEDE COMPLETO S	EMBASE COMPLETE S
1	REC90430-08020	90430-08020	ARANDELA	WASHER	RONDELLA	RONDELLE
2	REC90340-08002	90340-08002	TAPÓN ACEITE	PLUG, OIL	TAPPO OLIO	BOUCHON REMPLISSAGE D'HUILE
3	CM61N-45251-01	61N-45251-01	ÁNODO	ANODE	ANODO	ANODE
4	CM66M-45371-00	66M-45371-00	ÁNODO TIMÓN	TAB-TRIM	ANODO TIMONE	ANODE
5	REC93341-214U1	93314-314V8	COJINETE	BEARING	CUSCINETTO	PALIER
6	PAF15-06000008	6E8-45587-10-13	GRUESO	SHIM	SPESSORE	CALE
7	REC63V-45551-00	63V-45551-00	PIÑÓN	GEAR UNIT ASSY	PIGNONE	PIGNON
8	REC90179-08M06	90179-08M06	TUERCA	LOCK NUT	DADO	ÉCROU
9	PAF15-06000010-1	664-45567-01-10	GRUESO	SHIM	SPESSORE	CALE
10	REC93332-00005	93332-00005	COJINETE	BEARING	CUSCINETTO	PALIER
11	REC6E7-45560-01	6E7-45560-01	PIÑÓN	GEAR UNIT ASSY	PIGNONE	PIGNON
12	REC682-45631-00	682-45631-00	SELECTOR	CLUTCH BLOCK	SELETTORE	SELECTEUR
13	REC90250-05010	90250-05010	PASADOR	PIN	SPINOTTO	LEVIER
14	REC648-45633-00	648-45633-00	MUELLE	SPRING	MOLLA	RESSORT
15	REC650-45635-00	650-45635-00	ÉMBOLO	PLUNGER	BULLONE	BOUCHON
16	PAF15-06070002	90501-14M06	MUELLE	SPRING	MOLLA	RESSORT
17	REC683-45611-00	683-45611-00	EJE HÉLICE	PROPELLER SHAFT	ASSE ELICA	ARBRE D'HELICE
18	REC90201-17682	90201-17682	ARANDELA	WASHER	RONDELLA	RONDELLE
19	REC6E7-45570-00	6E7-45571-00	PIÑÓN	GEAR UNIT ASSY	PIGNONE	UNITÉ DE VITESSE
20	PAF15-06080006-1	626-45577-00-01	GRUESO	SHIM	SPESSORE	CALE
21	REC93306-00501	93306-00501	COJINETE	BEARING	CUSCINETTO	PALIER
22	REC93210-57M09	93210-57M09	TÓRICA	O-RING	O-RING	JOINT TORIQUE
23	PAF15-06080003	93210-56M80	TÓRICA	O-RING	O-RING	JOINT TORIQUE
24	REC683-45361-01-4D	683-45361-02-4D	DIÁBOLO	CAP, LOWER CASING	COPERCHIO CARTER INFERIORE	DIABOLO
25	PAGB/T97.1-6	92995-06600	ARANDELA	WASHER	RONDELLA	RONDELLE
26	PAGB/T5783-M6X20	97095-06020	TORNILLO	SCREW	VITE	VIS
27	REC93315-317U2	93315-317U2	COJINETE	BEARING	CUSCINETTO	PALIER
28	REC93101-17054	93101-17054	RETÉN DE ACEITE	OIL SEAL	PARAOLIO	JOINT SPI
29	REC6E7-45987-00	6E7-45987-00	ESPACIADOR	SPACER	DISTANZIALE	ENTRETOISE
30	REC90171-10M01	90171-10M01	TUERCA	LOCK NUT	DADO	ÉCROU
31	REC91490-30025	91490-30020	PASADOR ALETAS	PIN, COTTER	PIN	GOUPILLE
32	REC63V-45315-A0	63V-45315-A0	JUNTA	GASKET	GUANIZIONE	JOINT
33	REC93315-314V8	93315-314V8	COJINETE	BEARING	CUSCINETTO	PALIER
34	PAF15-06000006	63V-45536-00	CAMISA EJE	SLEEVE, DRIVE	TUBO GUIDA	TUBE GUIDE
35	PAF15-06030000S	63V-44150-00	VARILLA SELECTOR S	CAM ASSY, SHIFT ROD S	ASTICELLA CAMBIO S	LEVIER DE VITESSE S
	PAF15-06030000L	63V-44150-10	VARILLA SELECTOR L	CAM ASSY, SHIFT ROD L	ASTICELLA CAMBIO L	LEVIER DE VITESSE L
36	PAGB/T5783-M8X25	97080-08025	TORNILLO	SCREW	VITE	VIS
37	REC93210-06ME6	93210-06ME6	TÓRICA	O-RING	O-RING	JOINT TORIQUE
38	REC63V-45331-00-5B	63V-45331-00-5B	CUERPO DEL COJINETE	SHELL, BEARING	CORPO DE CUSCINETTO	LOGEMENT DE PALIER
39	REC626-45316-09	626-45316-09	CASQUILLO EJE	BUSHER, SHAFT	GOMMINO ASSE	DOUILLE
40	PAF15-06020005	63V-45375-00	RETÉN DE GOMA	SEAL, RUBBER	TENUTA IN COMMA	JOINT DE COUTCHOUC
41	REC93101-20048	93101-20048	RETÉN DE ACEITE	OIL SEAL	PARAOLIO	JOINT SPI
42	PAF15-06040000S	63V-45510-00	EJE VERTICAL S	DRIVE SHAFT S	ASSE VERTICALE S	ARBRE DE COMMANDE S
	REC63V-45501-10	63V-45510-11	EJE VERTICAL L	DRIVE SHAFT L	ASSE VERTICALE L	ARBRE DE COMMANDE L
43	REC664-44338-00	664-44338-00	CUÑA	KEY WOODRUFF	CHIAVETTA	CLAVETTE
44	REC63V-44323-00	63V-44323-00	JUNTA TAPA BOMBA AGUA	GASKET, WATER PUMP COVER	GUARNIZIONE COPERCHIO	JOINT COUVERCLE
45	REC93210-44398	93210-44398	TÓRICA	O-RING	O-RING	JOINT TORIQUE
46	REC63V-44352-01	63V-44352-01	TURBINA	IMPELLER	GIRANTE	TURBINE
47	REC63V-44322-00	63V-44322-00	TAPA, BOMBA AGUA	COVER, INNER WATER PUMP	COPERCHIO, POMPE DACQUA	INSERT DE POMPE A EAU
48	REC63V-44301-00	63V-44301-00	CUERPO DE BOMBA	PUMP HOUSING	CORPO POMPA	CORPS DE POMPE A EAU
49	PAF15-00000013	93604-12M07	PASADOR	PIN	SPINOTTO	PIN
50	REC647-44366-00	647-44366-00	TUBO GOMA BOMBA AGUA	RUBBER TUBE, WATER PUMP	TUBO IN GOMMA, POMPA	DURITE COUTCHOUC
51	PAF15-06000014	63V-44328-00	PLACA	OUT PLATE	PIASTRA	PLAQUE
52	REC97080-08045	97080-08045	PERNO	STUD	BULLONE	BOULON
53	PAF15-02000005S	66M-44361-00	TUBO DE AGUA S	WATER TUBE S	TUBO DELL'ACQUA S	DURITE D'EAU S
	PAF15-02000005L	66M-44361-10	TUBO DE AGUA L	WATER TUBE L	TUBO DELL'ACQUA L	DURITE D'EAU L
54	PAF15-02000006	63V-44365-10	GOMA DEL TUBO DE AGUA	I-SHAPED RUBBER BAND	GOMMA TUBO ACQUA	PLOT CAOUTCHOUC DE TUBE D'EAU

4T STROKES F9.9H • F13.5B • F15C/M/E • F20B/E/M

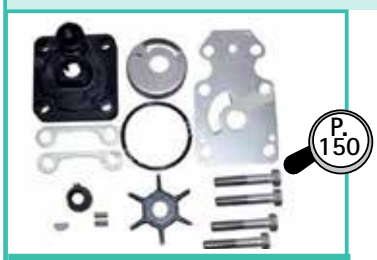

REF	OEM
REC6AH-W0078-00	6AH-W0078-00 6AH-W0078-01

	REF	OEM				
	PAF20-04000000L	6AH-45300-10-8D	COLA COMPLETA L	COMPLETE GEAR HOUSING L	PIEDE COMPLETO L	EMBASE COMPLETE L
	PAF20-04000000S	6AH-45300-00-8D	COLA COMPLETA S	COMPLETE GEAR HOUSING S	PIEDE COMPLETO S	EMBASE COMPLETE S
1	REC90430-08020	90430-08003	ARANDELA	WASHER	RONDELLA	RONDELLE
2	REC90340-08002	90340-08002	TAPÓN ACEITE	PLUG, OIL	TAPPO OLIO	BOUCHON REMPLISSAGE D'HUILE
3	PAF15-00000013	93604-12M07	PIN CENTRADOR	HOLLOW PIN	SPINOTTO DI CENTRAGGIO	PIN DE CENTRAGE
4	PAF20-04000001	69G-45315-A0	JUNTA	GASKET	GUANIZIONE	JOINT
5	PAF15-06020005	63V-45375-00	RETÉN DE GOMA	SEAL, RUBBER	TENUTA IN COMMA	JOINT CAOUTCHOUC
6	REC93315-314V8	93315-314V8	RODAMIENTO	BALL BEARING	CUSCINETTO	ROULEMENT À BILLE
7	PAF15-06000006	63V-45536-00	CAMISA EJE	SLEEVE, DRIVE	TUBO GUIDA	TUBE GUIDE
8	PAF20-04010001	69G-45331-01-CA	CUERPO DEL COJINETE	SHELL, BEARING	CORPO DE CUSCINETTO	LOGEMENT DE PALIER
9	REC626-45316-09	626-45316-09	CASQUILLO EJE	BUSHER, SHAFT	GOMMINO ASSE	DOUILLE
10	REC93101-20048	93101-20001	RETÉN DE ACEITE	OIL SEAL	PARAOLIO	JOINT D'HUILE
11	PAF20-04020000L PAF20-04020000S	6AH-44150-10 6AH-44150-00	VARILLA SELECTOR L VARILLA SELECTOR S	CAM ASSY, SHIFT ROD L CAM ASSY, SHIFT ROD S	ASTICELLA CAMBIO L ASTICELLA CAMBIO S	LEVIER DE VITESSE L LEVIER DE VITESSE S
12	REC93210-06ME6	93210-06ME6	TÓRICA	O-RING	O-RING	JOINT TORIQUE
13	PAGB/T5783-M8X25	97080-08025	TORNILLO	SCREW	VITE	VIS

	REF	OEM				
14	PAF20-04030000L	6AH-45510-10	EJE VERTICAL	DRIVE SHAFT	ASSE VERTICALE	ARBRE DE COMMANDE
	PAF20-04030000S	6AH-45510-00	EJE VERTICAL S	DRIVE SHAFT S	ASSE VERTICALE S	ARBRE DE COMMANDE S
15	REC664-44338-00	664-44338-00	CUÑA	KEY WOODRUFF	CHIAVETTA	CLAVETTE
16	REC68T-44323-00	68T-44323-00	JUNTA TAPA BOMBA AGUA	GASKET, WATER PUMP COVER	GUARNIZIONE COPERCHIO	JOINT COUVERCLE
17	REC93210-49046	93210-49046	TÓRICA	O-RING	O-RING	JOINT TORIQUE
18	REC63V-44352-01	63V-44352-01	TURBINA BOMBA AGUA	IMPELLER, WATER PUMP	GIRANTE POMPA	TURBINE DE POMPE A EAU
19	REC63V-44322-00	63V-44322-00	TAPA, BOMBA AGUA	COVER, INNER WATER PUMP	COPERCHIO, POMPE ACQUA	COUVERCLE DE POMPE A EAU
20	PAF15-00000013	93604-12M07	PASADOR BOMBA AGUA	PIN, WATER PUMP	SPINOTTO POMPA ACQUA	LEVIER POMPE D'EAU
21	PAF20-04040001	6AH-44311-00	CUERPO BOMBA AGUA	HOUSING, WATER PUMP	CORPO POMPA	CORPS DE POMPE A EAU
22	PAF25-04050004	6L2-44367-00	TUBO GOMA BOMBA AGUA	RUBBER TUBE, WATER PUMP	TUBO IN GOMMA, POMPA	DURITE DE COUTCHOUC
23	PAF15-06000014	63V-44328-01	PLACA	OUT PLATE	PIASTRA	PLAQUE
24	REC97095-08045	97095-08045	PERNO	STUD	BULLONE	BOULON
25	PAF20-02000005	6AH-44368-00	TUBO DE AGUA	WATER TUBE	TUBO DELL'ACQUA	DURITE D'EAU
26	PAF20-02000101L	6AH-44361-11	TUBO DE AGUA	WATER TUBE	TUBO DELL'ACQUA	DURITE D'EAU
	PAF20-02000101S	6AH-44361-01	TUBO DE AGUA S	WATER TUBE S	TUBO DELL'ACQUA S	DURITE D'EAU S
27	PAF20-02000007	6AH-44365-00	GOMA DEL TUBO DE AGUA	I-SHAPED RUBBER BAND	GOMMA TUBO ACQUA	PLOT CAOUTCHOUC DE TUBE D'EAU
28	PAHT-2.5X50	90465-11M10	BRIDA 2,5X50	CLAMP	FASCETTA	COLLIER RILSAN 2,5X50
29	PAF15-06000010-1	664-45567-01	GRUESO 0.10 mm	SHIM 0.10 mm	SPESSORE 0.10 mm	CALE 0.10 mm
	PAF15-06000010-2	664-45567-10	GRUESO 0.12 mm	SHIM 0.12 mm	SPESSORE 0.12 mm	CALE 0.12 mm
	PAF15-06000010-3	664-45567-20	GRUESO 0.15 mm	SHIM 0.15 mm	SPESSORE 0.15 mm	CALE 0.15 mm
	PAF15-06000010-4	664-45567-30	GRUESO 0.18 mm	SHIM 0.18 mm	SPESSORE 0.18 mm	CALE 0.18 mm
	PAF15-06000010-5	664-45567-40	GRUESO 0.30 mm	SHIM 0.30 mm	SPESSORE 0.30 mm	CALE 0.30 mm
	PAF15-06000010-6	664-45567-50	GRUESO 0.40 mm	SHIM 0.40 mm	SPESSORE 0.40 mm	CALE 0.40 mm
	PAF15-06000010-7	664-45567-60	GRUESO 0.50 mm	SHIM 0.50 mm	SPESSORE 0.50 mm	CALE 0.50 mm
30	REC93332-00005	93332-00005	RODAMIENTO	BALL BEARING	CUSCINETTO	ROULEMENT À BILLE
31	REC6E7-45560-01	6E7-45560-01	PIÑÓN	GEAR UNIT ASSY	PIGNONE	PIGNON
32	REC650-45635-00	650-45635-00	ÉMBOLO	PLUNGER	BULLONE	BOUCHON
33	REC682-45631-00	682-45631-00	SELECTOR	CLUTCH BLOCK	SELETTORE	SELECTEUR
34	REC90250-05010	90250-05010	PASADOR	PIN	SPINOTTO	LEVIER
35	REC648-45633-00	648-45633-11	MUELLE	SPRING	MOLLA	RESSORT
36	PAF15-06070002	90501-150A0	MUELLE	SPRING	MOLLA	RESSORT
37	REC683-45611-00	683-45611-00	EJE HÉLICE	PROPELLER SHAFT	ASSE ELICA	ARBRE D'HELICE
38	REC90201-17682	90201-17682	ARANDELA	WASHER	RONDELLA	RONDELLE
39	REC6E7-45570-00	6E7-45570-00	PIÑÓN	GEAR UNIT ASSY	PIGNONE	PIGNON
40	PAF15-06080006-1	626-45577-00	GRUESO 0.10 mm	SHIM 0.10 mm	SPESSORE 0.10 mm	CALE 0.10 mm
	PAF15-06080006-2	626-45577-10	GRUESO 0.20 mm	SHIM 0.20 mm	SPESSORE 0.20 mm	CALE 0.20 mm
	PAF15-06080006-3	626-45577-20	GRUESO 0.30 mm	SHIM 0.30 mm	SPESSORE 0.30 mm	CALE 0.30 mm
	PAF15-06080006-4	626-45577-30	GRUESO 0.40 mm	SHIM 0.40 mm	SPESSORE 0.40 mm	CALE 0.40 mm
	PAF15-06080006-5	626-45577-40	GRUESO 0.50 mm	SHIM 0.50 mm	SPESSORE 0.50 mm	CALE 0.50 mm
41	PAF15-06080000		FUNDA INFERIOR COMPLETA	COVER ASSY, LOWER CASING	COVER INFERIORE COMPLETA	DIABOLO COMPLET
42	REC93306-00501	93306-00501	COJINETE	BEARING	CUSCINETTO	ROULEMENT
43	REC93210-57M09	93210-57M09	TÓRICA	O-RING	O-RING	JOINT TORIQUE
44	PAF15-06080003	93210-56M80	TÓRICA	O-RING	O-RING	JOINT TORIQUE
45	REC683-45361-01-4D	683-45361-02-8D	DIÁBOLO	CAP, LOWER CASING	COPERCHIO CARTER INFERIORE	DIABOLO
46	PAGB/T5783-M6X20	97575-06520	TORNILLO	SCREW	VITE	VIS
47	REC93315-317U2	93315-317U2	COJINETE	BEARING	CUSCINETTO	PALIER
48	REC93101-17054	93101-17054	RETÉN DE ACEITE	OIL SEAL	PARAOLIO	JOINT SPI
49	REC6E7-45987-00	6E7-45987-01	ESPACIADOR	SPACER	DISTANZIALE	ENTRETOISE
50	PAGB/T96-10	90201-10M01	ARANDELA	WASHER	RONDELLA	RONDELLE
51	REC90171-10M01	90171-10M01	TUERCA	LOCK NUT	DADO	ÉCROU
52	REC91490-30025	94190-30020	PASADOR ALETAS	PIN, COTTER	PIN	GOUPILLE
53	PAGB/T6182-M5	90185-05002	TUERCA	LOCK NUT	DADO	ÉCROU
54	PAF15-06000002	63V-45215-00	CUBIERTA, ENTRADA AGUA 2	WATER INLET A	COPERCHIO ENTRATA ACQUA A	GRILLE D'ENTREE D'EAU A
55	PAF15-06000003	6G1-45214-00	CUBIERTA, ENTRADA AGUA 1	WATER INLET B	COPERCHIO ENTRATA ACQUA B	GRILLE D'ENTREE D'EAU B
56	PAGB/T820-M5X20	90152-05011	TORNILLO	SCREW	VITE	VIS
57	PAF15-06000020-1	90201-15017	ARANDELA	WASHER	RONDELLA	RONDELLE
58	PAF15-06000008	6E8-45587-10	GRUESO 1.13 mm	SHIM 1.13 mm	SPESSORE 1.13 mm	CALE 1.13 mm
58	PAF15-06000009	6E8-45587-30	GRUESO 1.20 mm	SHIM 1.20 mm	SPESSORE 1.20 mm	CALE 1.20 mm
59	REC63V-45551-00	63V-455551-00	PIÑÓN	GEAR UNIT ASSY	PIGNONE	PIGNON
60	REC90179-08M06	90179-08M06	TUERCA	LOCK NUT	DADO	ÉCROU
61	PAGB/T5783-M8X30	97575-08530	PERNO	STUD	BULLONE	BOULON
62	TEN01154AL	6AH-45251-00	ÁNODO	ANODE	ANODO	ANODE
63	PAGB/T861.1-6	92990-06300	ARANDELA	WASHER	RONDELLA	RONDELLE
64	PAGB/T5783-M6X30	95895-06035	TORNILLO	SCREW	VITE	VIS

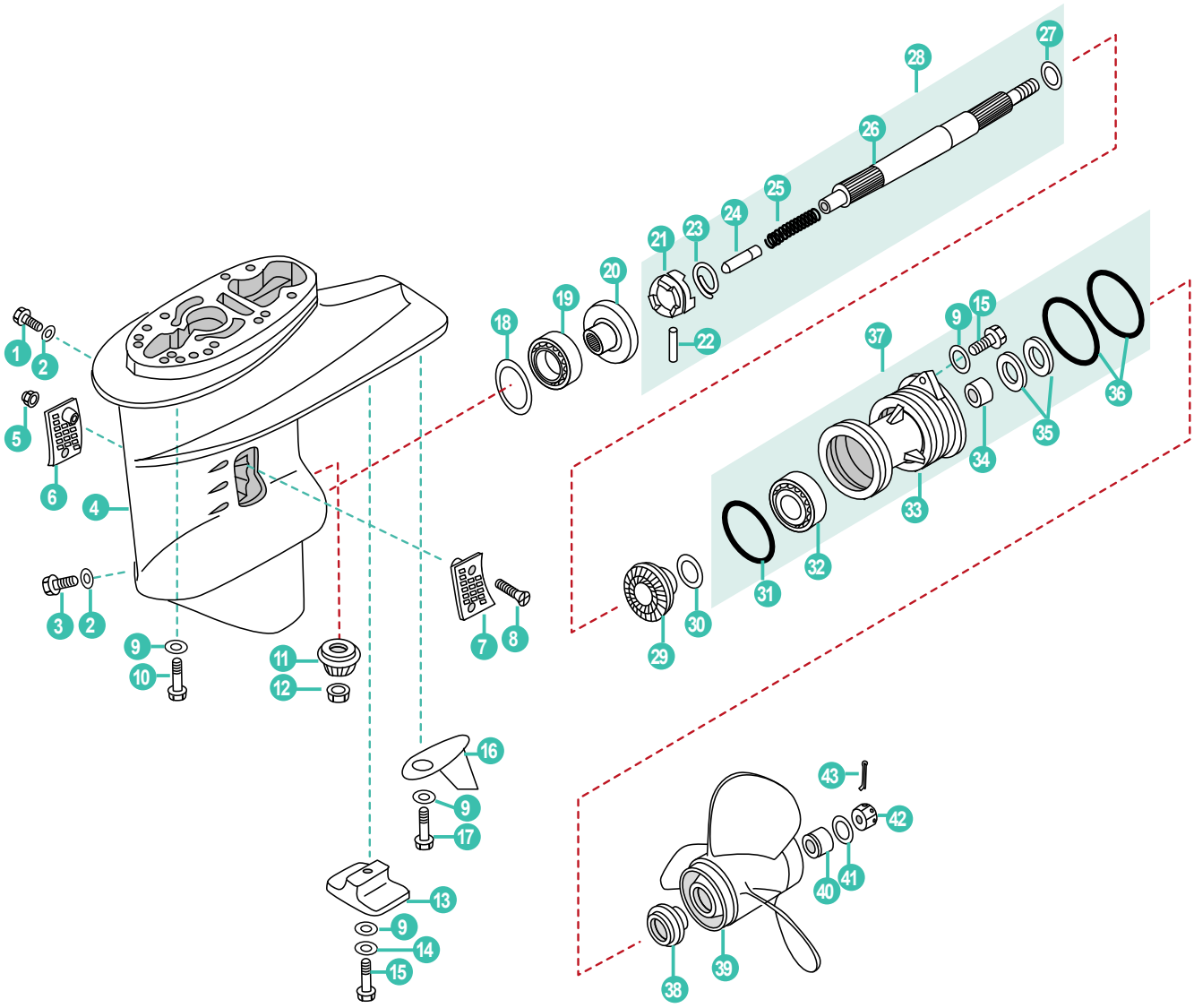
1
2
3
2
4
5
6
7
8
9
10
11
12
13
9
14
15
16
9
17
18
19
20
21
22
23
24
25
26
27
28
29
30
31
32
33
34
35
36
37
9
15
38
39
40
41
42
43


REC80W90U3
REC80W90U6
RECGREU1
RECGREU12
P. 43

	REF	OEM				
	PAF25-04090000L	65W-45300-10-4D	COLA COMPLETA L	COMPLETE GEAR HOUSING L	PIEDE COMPLETO L	EMBASE COMPLETE L
	PAF25-04090000S	65W-45300-00-4D	COLA COMPLETA S	COMPLETE GEAR HOUSING S	PIEDE COMPLETO S	EMBASE COMPLETE S
1	REC90340-08002	90340-08M04	TAPÓN ACEITE	PLUG, OIL	TAPPO OLIO	BOUCHON REMPLISSAGE D'HUILE
2	REC90430-08020	93210-06ME6	JUNTA	GASKET	GUANIZIONE	JOINT
3	REC688-45341-00	688-45341-00	TAPÓN DE DESAGÜE	PLUG, DRAIN	TAPPO DRENAGGIO	BOUCHON DE VIDANGE
4	PAF25-04000001	61N-45311-02-4D	CARTER	LOWER CASING	CARTER	CARTER D'EMBASE
5	PAGB/T889.1-2000	90185-05002	TUERCA	NUT, LOCKING	DADO	ÈCROU
6	PAF25-04000023	6L2-45215-00	CUBIERTA ENTRADA AGUA B	WATER INLET "B"	COPERCHIO ACQUA B	GRILLE D'ENTREE D'EAU B
7	PAF25-04000022	6L2-45214-00	CUBIERTA ENTRADA AGUA A	WATER INLET "A"	COPERCHIO ACQUA A	GRILLE D'ENTREE D'EAU A
8	PAGB/T820-M5X30	90151-05M05	TORNILLO	SCREW, PAN HEAD	VITE	VIS
9	PAGB/T97.1-8	92995-10600	ARANDELA	WASHER	RONDELLA	RONDELLE
10	PAF25-00000011	90105-10M12	TORNILLO	BOLT	VITE	VIS
11	PAF25-04000005	61N-45551-00	PIÑÓN	PINION	PIGNONE	PIGNON
12	REC90179-10M14	90179-10M14	TUERCA	NUT, PINION	DADO	ÈCROU
13	PAF15-06000004	61N-45251-00	ÁNODO	ANODE, LOWER	ANODO	ANODE
14	PAGB/T861.1-87	92990-06300	ARANDELA	WASHER, LOCKING	RONDELLA	RONDELLE
15	PAGB/T5782-M6X125	95895-06035	TORNILLO	BOLT	VITE	VIS
16	PAF25-04000021	61N-45214-00	PLACA TIMÓN	TAB, COURSE	PIASTRA TIMONE	DERIVE
17	PAGB/T5783-M5X12	90119-06M48	TORNILLO	BOLT	VITE	VIS
18	PAF25-04000004-3	6L2-45567-12	GRUESO 1.2 mm	SHIM 1.2 mm	SPESSORE 1.2 mm	CALE 1.2 mm
	PAF25-04000004-5	6L2-45567-14	GRUESO 1.4mm	SHIM 1.4 mm	SPESSORE 1.4 mm	CALE 1.4 mm
19	REC93332-00005	93332-00005	RODAMIENTO	BALL BEARING	CUSCINETTO	ROULEMENT À BILLE
20	REC61N-45560-10	61N-45560-00	PIÑÓN AVANTE	GEAR UNIT ASSY	PIGNONE	PIGNON MARCHE AVANT
21	PAF25-04060003	664-45631-02	SELECTOR	CLUTCH BLOCK	SELETTORE	CRABOT
22	REC90250-05010	90250-05010	PASADOR	PIN	SPINOTTO	LEVIER
23	REC648-45633-00	648-45633-00	MUELLE	SPRING	MOLLA	RESSORT
24	REC648-45635-00	648-45635-00	ÉMBOLO	PLUNGER	BULLONE	BOUCHON
25	PAF25-04060002	90501-10065	MUELLE	SPRING	MOLLA	RESSORT
26	REC6L2-45611-00	612-45611-00	EJE HÉLICE	PROPELLER SHAFT	ASSE ELICA	ARBRE D'HELICE
27	PAF25-04060007	90201-20417	GRUESO	SHIM	SPESSORE	CALE
28	PAF25-04060000		EJE HÉLICE COMPELTO	PROPELLER, SHAFT ASSY	ASSE ELICHE COMPLETO	ARBRE D'HELICE COMPLÈTE
29	PAF25-04070004	61N-45571-00	PIÑÓN MARCHA INVERSA	GEAR, REVERSE	MARCIA INDIETRO	PIGON MARCHE ARRIERE
30	PAF25-04070005-1	6L2-45577-00-10	GRUESO 1.0 mm	SHIM 1.0 mm	SPESSORE 1.0 mm	CALE 1.0 mm
	PAF25-04070005-3	6L2-45577-00-12	GRUESO 1.2 mm	SHIM 1.2 mm	SPESSORE 1.2 mm	CALE 1.2 mm
31	REC93210-64ME7	93210-64ME7	TÓRICA	O-RING	O-RING	JOINT TORIQUE
32	PAGB/T276-6006/P6	93306-00612	RODAMIENTO	BALL BEARING	CUSCINETTO	ROULEMENT À BILLE
33	PAF25-04070001	61N-45361-01-4D	DIÁBOLO	CAP, LOWER CASING	COPERCHIO CARTER INFERIORE	DIABOLO
34	REC93315-22004	93315-22004	RODAMIENTO	BALL BEARING	CUSCINETTO	ROULEMENT À BILLE
35	REC93101-20M07	93101-20M07	RETÉN DE ACEITE	OIL SEAL	PARAOLIO	JOINT SPI
36	REC93210-65M50	93210-65M50	TÓRICA	O-RING	O-RING	JOINT TORIQUE
37	PAF25-04070000		TAPA CÁRTER COMPLETA	COVER ASSY, LOWER CASING	COPERCHIO CARTER COMPLETA	DIABOLO COMPLET
38	REC6L2-45987-00	6L2-45987-01	ESPACIADOR	SPACER, PROPELLER	SPESSORE	ENTRETOISE
39	PAF25-04080000	664-45947-01-EL	HÉLICE	PROPELLER ASSY	ELICHE	HELICE
40	REC689-45997-00	689-45997-00	ESPACIADOR	SPACER	SPESSORE	ENTRETOISE
41	PAGB/T97.1-8	92990-14200	ARANDELA	WASHER	RONDELLA	RONDELLE
42	REC90171-14013-00	90171-14013	TUERCA	NUT	DADO	ÈCROU
43	PAGB/T91-1.6X12	91490-30022	PIN	PIN, COTTER	SPINOTTO	GOUPILLE

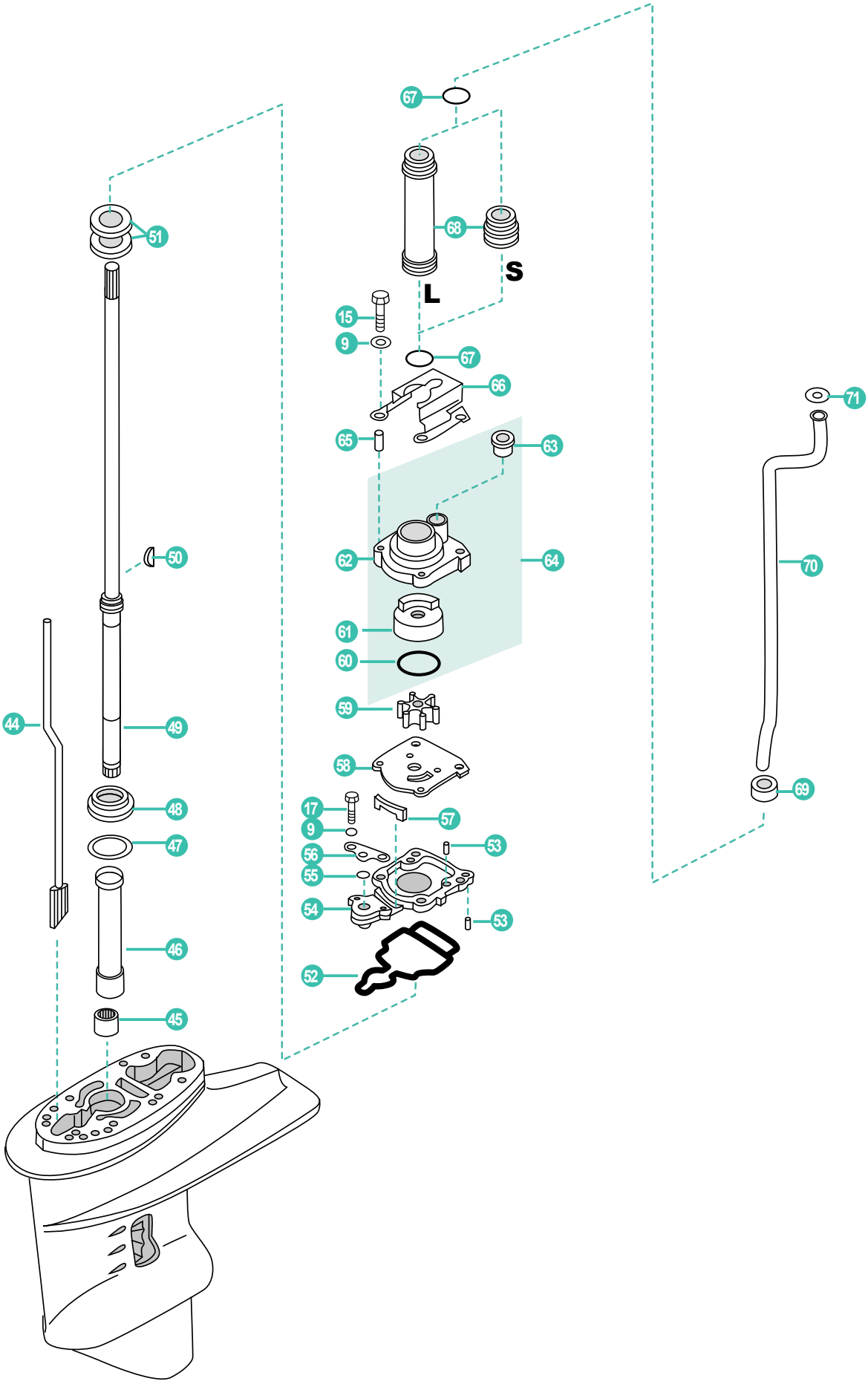
67
68
L
S
15
9
67
66
65
63
62
64
61
60
59
58
17
9
57
56
55
53
54
53
52
51
50
44
49
48
47
46
45
71
70
69

	REF	OEM				
44	PAF25-04030000L	65W-44150-10	VARILLA SELECTOR L	CAM ASSY, SHIFT ROD L	ASTICELLA CAMBIO L	LEVIER DE VITESSE L
	PAF25-04030000S	65W-44150-00	VARILLA SELECTOR S	CAM ASSY, SHIFT ROD S	ASTICELLA CAMBIO S	LEVIER DE VITESSE S
45	PAGB/T290F-2020	93315-220V7	RODAMIENTO	BALL BEARING	CUSCINETTO	ROULEMENT À BILLE
46	PAF25-04000002	61N-45536-00	CASQUILLO	BUSHING, NYLON	GHIERA	BAGUE NYLON
47	PAF25-04000003-2	61N-45587-00-10	GRUESO 1.0 mm	SHIM 1.0 mm	SPESSORE 1.0 mm	CALE 1.0 mm
	PAF25-04000003-3	61N-45587-00-11	GRUESO 1.1 mm	SHIM 1.1 mm	SPESSORE 1.1 mm	CALE 1.1 mm
	PAF25-04000003-4	61N-45587-00-12	GRUESO 1.2 mm	SHIM 1.2 mm	SPESSORE 1.2 mm	CALE 1.2 mm
	PAF25-04000003-5	61N-45587-00-13	GRUESO 1.3 mm	SHIM 1.3 mm	SPESSORE 1.3 mm	CALE 1.3 mm
	PAF25-04000003-6	61N-45587-00-14	GRUESO 1.4mm	SHIM 1.4 mm	SPESSORE 1.4 mm	CALE 1.4 mm
	PAF25-04000003-7	61N-45587-00-15	GRUESO 1.5mm	SHIM 1.5 mm	SPESSORE 1.5 mm	CALE 1.5 mm
48	PAHI-CAP32004JRKOYO	93332-000W5	CUERPO RODAMIENTO	HOUSING, BEARING	CORPO CUSCINETTO	LOGEMENT DE ROULEMENT
49	PAF25-04010000L	61N-45510-10	EJE VERTICAL L	DRIVE SHAFT ASSY L	ASSE VERTICALE L	ARBRE DE COMMANDE L
	PAF25-04010000S	61N-45510-00	EJE VERTICAL S	DRIVE SHAFT ASSY S	ASSE VERTICALE S	ARBRE DE COMMANDE S
50	PAF25-04000015	90280-03024	CHAVETA	KEY WOODRUFF	CHIAVETTA	CLAVETTE
51	REC93101-22M00	93101-22067	RETÉN DE ACEITE	OIL SEAL	PARAOLIO	JOINT D'HUILE
52	PAF25-04000009	61N-45315-00	RETÉN	SEAL	TENUTA	JOINT
53	PAF25-04000007	93604-10M03	PIN	PIN, COTTER	SPINOTTO	PLOT DE CENTRAGE F4X12
54	PAF25-04000008	65W-45331-00-5B	BASE EJE VERTICAL	BASE, DRIVE SHAFT	BASE, ASSE VERTICALE	BASE POUR ARBRE D'ENTRAINEMENT
55	REC93210-06ME6	93210-06ME6	TÓRICA	O-RING	O-RING	JOINT TORIQUE
56	PAF25-04000012	65W-44176-00	PLACA	OUT PLATE	PIASTRA	PLAQUE
57	PAF25-04000013	61N-45127-00	RETÉN AGUA	WATER SEAL	PARAOLIO ACQUA	RONDELLE JOINT
58	REC61N-44323-00	61N-44323-00	JUNTA TAPA BOMBA AGUA	GASKET, WATER PUMP COVER	GUARNIZIONE COPERCHIO	JOINT COUVERCLE
59	REC6H4-44352-02	6H4-44352-02	TURBINA BOMBA AGUA	IMPELLER, WATER PUMP	GIRANTE POMPA	TURBINE DE POMPE A EAU
60	PAF25-04050003	93210-45161	TÓRICA	O-RING	O-RING	JOINT TORIQUE
61	REC61N-44322-00	61N-44322-01	ACOPLE INOX	INSERT CARTRIDGE	ACCOPPIAMENTO INOX	INSERT DE POMPE A EAU
62	PAF25-04050001	61N-44311-01	CUERPO BOMBA	SHELL, WATER PUMP	CORPO POMPA	CORPS DE POMPE À EAU
63	PAF25-04050004	6L2-44367-00	RETÉN TUBO AGUA	DAMPER, WATER PIPE	AMMORTIZZATORE, TUBO DELL'ACQUA	MANCHON TUYAU D'EAU
64	PAF25-04050000		KIT CUERPO BOMBA	SHELL ASSY, WATER PUMP	KIT CORPO POMPA	KIT COPRS DE POMPE À EAU
65	REC93606-12019	93606-11M24	PIN	PIN, DOWEL	SPINOTTO	PLOT DE CENTRAGE
66	PAF25-04000016	65W-44328-00	PLATO FIJO BOMBA AGUA	FIXED PLATE, WATER PUMP	PIASTRA POMPA	PLAQUE FIXATION CORPS DE POMPE A EAU
67	PAGB/T3452.1-25.8X2	93210-26130	TÓRICA	O-RING	O-RING	JOINT TORIQUE
68	PAF25-04000017	61N-44362-10	TUBO AGUA L	TUBE, WATER L	TUBO L	TUBE D'EAU L
	PAF25-04000017S	61N-44362-00	TUBO AGUA S	TUBE, WATER S	TUBO S	TUBE D'EAU S
69	PAF25-02000005	90430-12072	JUNTA AGUA	GASKET, WATER PIPE	GUARNIZIONE	JOINT
70	PAF25-02000004L	65W-44361-10	TUBO AGUA L	TUBE, WATER L	TUBO L	TUBE D'EAU L
	PAF25-02000004S	65W-44361-00	TUBO AGUA S	TUBE, WATER	TUBO S	TUBE D'EAU S
71	PAF25-02000019	90202-12060	ARANDELA	WASHER, NYLON	RONDELLA	RONDELLE



REF	OEM
REC65W-W0001-20	65W-W0001-20

P. 145

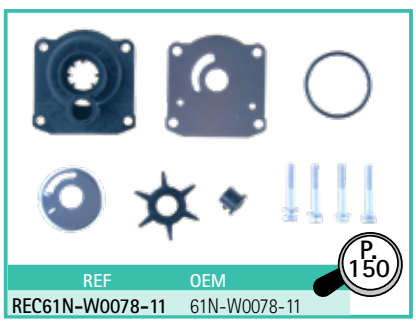

REF	OEM
REC61N-W0078-11	61N-W0078-11

P. 150

4T STROKES F30A/E/M • F40B/E/T

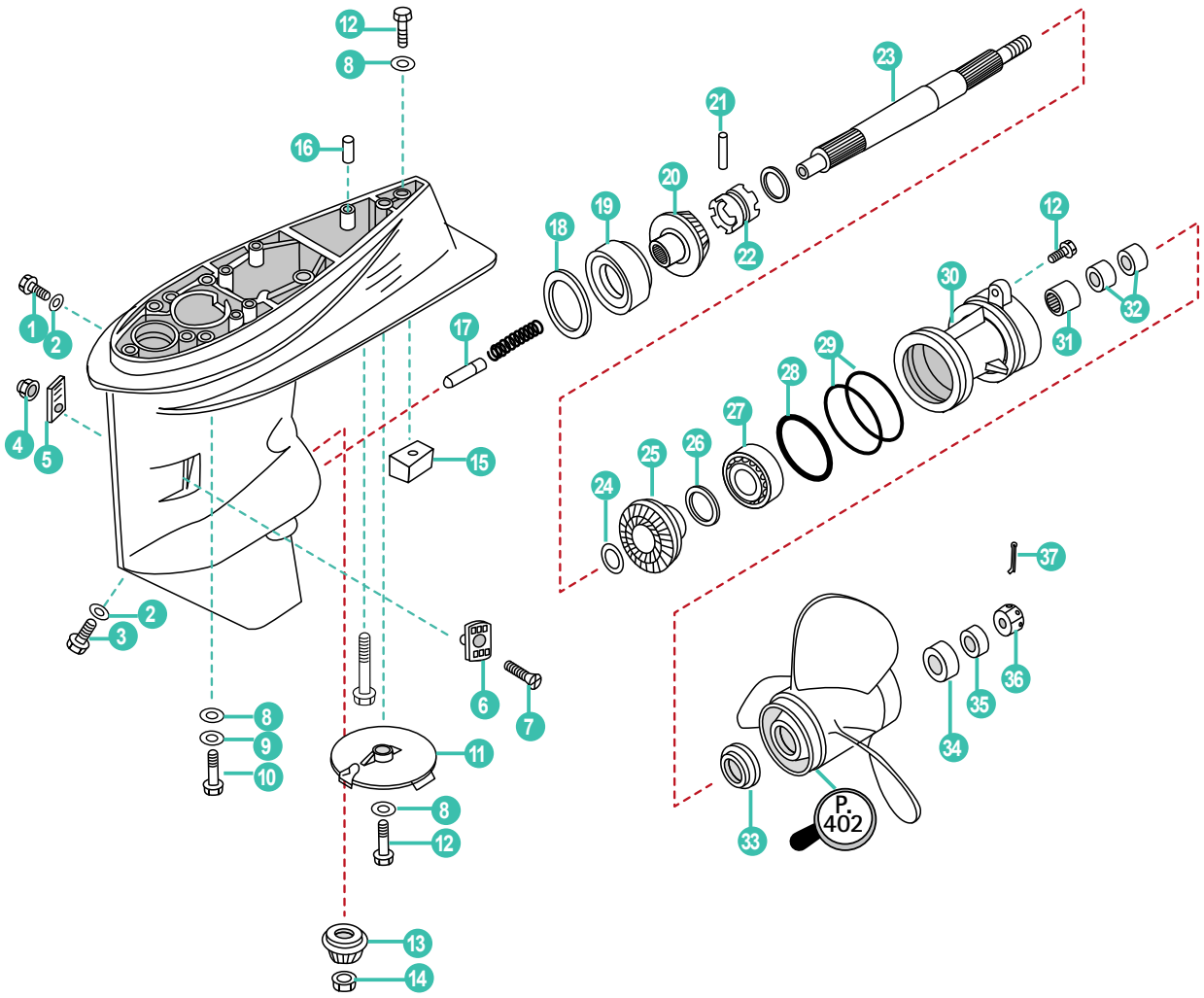

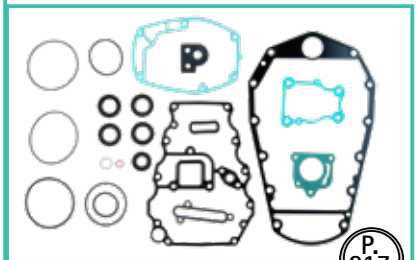

REF	OEM
REC67C-W0001-20	67C-W0001-20

P. 217



REF	OEM
REC66T-W0078-00	66T-W0078-00

P. 152



REF
REC80W90U3
REC80W90U6
RECGREU1
RECGREU12

P. 43

	REF	OEM				
1	REC90340-08002	90340-08002	TAPÓN ACEITE	PLUG, OIL	TAPPO OLIO	BOUCHON DE NIVEAU D'HUILE
2	REC90430-08020	90430-08020	JUNTA	GASKET	GUARNIZIONE	JOINT
3	REC688-45341-00	688-45341-10	TAPÓN ACEITE	PLUG, OIL	TAPPO OLIO	BOUCHON REMPLISSAGE D'HUILE
4	PAGB/T889.1-M5	95380-05600	TUERCA	LOCK NUT	DADO	ÉCROU
5	PAT40-04000023	63D-45215-00	CUBIERTA ENTRADA AGUA	WATER INLET "B"	COPERCHIO ACQUA	GRILLE D'ENTREE D'EAU B
6	PAT40-04000022	63D-45214-00	CUBIERTA ENTRADA AGUA	WATER INLET "A"	COPERCHIO ACQUA	GRILLE D'ENTREE D'EAU A
7	PAGB/T820-M5X30	90142-05M06	TORNILLO	SCREW	VITE	VIS
8	PAGB/T97.1-8	92995-10600	ARANDELA	WASHER	RONDELLA	RONDELLE
9	PAGB/T97.1-10	92995-10100	ARANDELA	WASHER	RONDELLA	RONDELLE
10	REC97075-10040	97075-10040	PERNO	STUD	BULLONE	BOULON
11	CM67C-45371-00A	67C-45371-00	ÁNODO	ANODE	ANODO	ANODE
12	PAGB/T5783-M8X25	97095-08025	PERNO	STUD	BULLONE	BOULON
13	REC66T-45551-00	66T-45551-00	PIÑÓN	GEAR UNIT ASSY	PIGNONE	PIGNON
14	REC90170-12138	90170-12138	TUERCA	LOCK NUT	DADO	ÉCROU
15	CM67C-45251-00A	67C-45251-00	ÁNODO	ANODE	ANODO	ANODE
16	REC93606-12019	93606-12019	PASADOR	PIN	SPINOTTO	LEVIER
17	REC66T-45635-00	66T-45635-00	ÉMBOLO	PLUNGER	BULLONE	BOUCHON
18	PAT40-04000004-1	663-45567-01	GRUESO 0.10 mm	SHIM 0.10 mm	SPESSORE 0.10 mm	CALE 0.10 mm
	PAT40-04000004-2	663-45567-10	GRUESO 0.12 mm	SHIM 0.12 mm	SPESSORE 0.12 mm	CALE 0.12 mm
	PAT40-04000004-3	663-45567-20	GRUESO 0.15 mm	SHIM 0.15 mm	SPESSORE 0.15 mm	CALE 0.15 mm
	PAT40-04000004-5	663-45567-40	GRUESO 0.30 mm	SHIM 0.30 mm	SPESSORE 0.30 mm	CALE 0.30 mm
19	REC93332-00003	93332-00003	COJINETE	BEARING	CUSCINETTO	PALIER
20	REC66T-45560-00	66T-45560-01	PIÑON MARCHA AVANTE	FORWARD GEAR	PIGNONE MARCIA AVANTI	PIGNON MARCHE AVANT
21	REC90250-06023	90250-06023	PASADOR	PIN	SPINOTTO	PIN
22	REC66T-45631-00	66T-45631-00	SELECTOR	CLUTCH BLOCK	SELETTORE	CRABOT
23	REC66T-45611-00	66T-45611-00	EJE HÉLICE	PROPELLER SHAFT	ASSE ELICA	ARBRE D'HELICE
24	REC90201-22429	90201-22429	ARANDELA	WASHER	RONDELLA	RONDELLE
25	REC66T-45571-00	66T-45571-00	PIÑÓN MARCHA ATRÁS	REVERSE GEAR	PIGNONE MARCIA INDIETRO	PIGNON MARCHE ARRIÈRE
26	PAT40-04060005-2	63D-45577-10	GRUESO 0.12 mm	SHIM 0.12 mm	SPESSORE 0.12 mm	CALE 0.12 mm
	PAT40-04060005-3	63D-45577-20	GRUESO 0.15 mm	SHIM 0.15 mm	SPESSORE 0.15 mm	CALE 0.15 mm
	PAT40-04060005-4	63D-45577-30	GRUESO 0.18 mm	SHIM 0.18 mm	SPESSORE 0.18 mm	CALE 0.18 mm
	PAT40-04060005-5	63D-45577-40	GRUESO 0.30 mm	SHIM 0.30 mm	SPESSORE 0.30 mm	CALE 0.30 mm
	PAT40-04060005-6	63D-45577-50	GRUESO 0.40 mm	SHIM 0.40 mm	SPESSORE 0.40 mm	CALE 0.40 mm
	PAT40-04060005-7	63D-45577-60	GRUESO 0.50 mm	SHIM 0.50 mm	SPESSORE 0.50 mm	CALE 0.50 mm
27	REC93306-001U1	93306-001U1	COJINETE	BEARING	CUSCINETTO	PALIER
28	REC93210-69MG6	93210-69MG6	TÓRICA	O-RING	O-RING	JOINT TORIQUE
29	REC93210-74MG5	93210-74MG5	TÓRICA	O-RING	O-RING	JOINT TORIQUE
30	REC63D-45361-02-4D	63D-45361-02-4D	DIÁBOLO	CAP, LOWER CASING	COPERCHIO CARTER INFERIORE	DIABOLO
31	REC93317-22204	93317-22204	COJINETE	BEARING	CUSCINETTO	PALIER
32	REC93101-22M00	93101-22M00	RETÉN DE ACEITE	OIL SEAL	PARAOLIO	JOINT SPI
33	REC663-45987-00	663-45987-02	ESPACIADOR	SPACER	DISTANZIALE	ENTRETOISE
34	REC66T-45997-00	66T-45997-00	ESPACIADOR	SPACER	DISTANZIALE	ENTRETOISE
35	REC90389-22M01	90389-22M01	CASQUILLO HÉLICE	WASHER	GHIERA ELICA	RONDELLE D'HELICE
36	REC90171-16011	90171-16011	TUERCA	LOCK NUT	DADO	ÉCROU
37	REC91490-30025	91490-30025	PASADOR	PIN	SPINOTTO	LEVIER

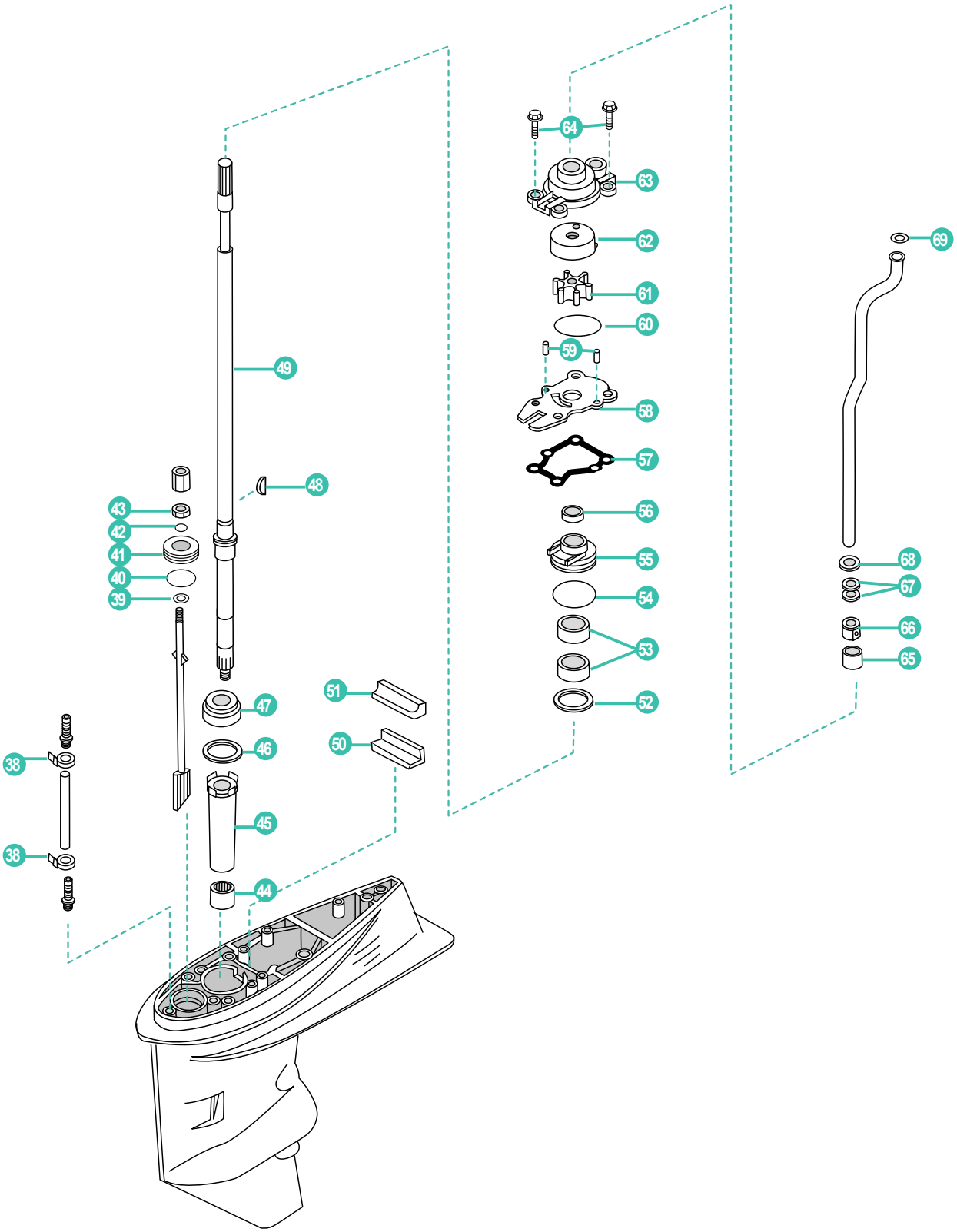
64
63
62
61
60
59
58
57
56
55
54
53
52
69
68
67
66
65
49
48
43
42
41
40
39
47
46
45
44
51
50
38
38

	REF	OEM				
38	PAHT-2.5X60	90465-11M10	BRIDA	CLAMP	FLANGIA	COLLIER
39	PAGB/T97.1-6	92990-06600	ARANDELA	WASHER	RONDELLA	RONDELLE
40	REC93210-33MG4	93210-33MG4	TÓRICA	O-RING	O-RING	JOINT TORIQUE
41	PAT40-04000007	66T-45321-00	PLACA	COVER PLATE, CAMSHAFT	PLACCA	COUVERCLE
42	REC93210-06ME6	93210-06ME6	TÓRICA	O-RING	O-RING	JOINT TORIQUE
43	REC95380-06700	95380-06700	TUERCA	LOCK NUT	DADO	ÉCROU
44	REC93315-32224	93315-32224	COJINETE	BEARING	CUSCINETTO	PALIER
45	PAT40-04000002	6H4-45536-00	CAMISA EJE	SLEEVE, DRIVE	TUBO GUIDA	BAGUE NYLON
	PAT40-04000003-1	663-45587-01	GRUESO 0.10 mm	SHIM 0.10 mm	SPESSORE 0.10 mm	CALE 0.10 mm
	PAT40-04000003-2	663-45587-10	GRUESO 0.12 mm	SHIM 0.12 mm	SPESSORE 0.12 mm	CALE 0.12 mm
	PAT40-04000003-3	663-45587-20	GRUESO 0.15 mm	SHIM 0.15 mm	SPESSORE 0.15 mm	CALE 0.15 mm
46	PAT40-04000003-4	663-45587-30	GRUESO 0.18 mm	SHIM 0.18 mm	SPESSORE 0.18 mm	CALE 0.18 mm
	PAT40-04000003-5	663-45587-40	GRUESO 0.30 mm	SHIM 0.30 mm	SPESSORE 0.30 mm	CALE 0.30 mm
	PAT40-04000003-6	663-45587-50	GRUESO 0.40 mm	SHIM 0.40 mm	SPESSORE 0.40 mm	CALE 0.40 mm
	PAT40-04000003-7	663-45587-60	GRUESO 0.50 mm	SHIM 0.50 mm	SPESSORE 0.50 mm	CALE 0.50 mm
47	REC93332-00001	93332-00001	COJINETE	BEARING	CUSCINETTO	ROULEMENT
48	REC90280-03M03	90280-03M03	CHAVETA	KEY WOODRUFF	CHIAVETTA	CLAVETTE
49	REC67C-45501-00	67C-45501-00	EJE VERTICAL S	DRIVE SHAFT S	ASSE VERTICALE S	ARBRE DE COMMANDE S
	REC67C-45501-10	67C-45501-10	EJE VERTICAL L	DRIVE SHAFT L	ASSE VERTICALE L	ARBRE DE COMMANDE L
50	REC663-45376-00	663-45376-00-94	GUÍA SELLO DE GOMA	GUIDE RUB. SEAL	GUIDA PARAOLIO	GUIDE
51	PAT40-04000014	63D-45375-00	SELLO DE GOMA	WATER ENVELOP	PARAOLIO	PROTECTION TUYAU D'EAU
52	PAT40-04000008	90201-27M00	ARANDELA	WASHER	RONDELLA	RONDELLE
53	REC93101-22M60	93101-22M60	RETÉN DE ACEITE	OIL SEAL	PARAOLIO	JOINT SPI
54	REC93210-48MG8	93210-48MG8	TÓRICA	O-RING	O-RING	JOINT TORIQUE
55	REC63D-44341-00	63D-44341-00	CUERPO BOMBA DE AGUA	SHELL, WATER PUMP	CORPO POMPA	INSERT POMPE À EAU
56	PAT40-04000009	66T-45344-01	CUBIERTA SELLO DE ACEITE	COVER, OIL SEAL	COPERCHIO, PARAOLIO	JOINT SPI
57	REC63D-44316-00	63D-44316-00	JUNTA	GASKET	GUARNIZIONE	JOINT
58	REC66T-44323-00	66T-44323-00	PLACA EXTERIOR	OUTER PLATE	PIASTRA POMPA ACQUA	PLAQUE DE POMPE À EAU
59	PAF25-04000007	93604-08062	PASADOR	PIN	SPINOTTO	PIN
60	REC93210-59MG7	93210-59MG7	TÓRICA	O-RING	O-RING	JOINT TORIQUE
61	REC6H4-44352-02	6H4-44352-02	TURBINA	IMPELLER	GIRANTE	TURBINE
62	REC63D-44322-00	63D-44322-00	TAPA, BOMBA AGUA	COVER, INNER WATER PUMP	COPERCHIO, POMPE ACQUA	COUVERCLE, POMPE D'EAU
63	PAT40-04000201	66T-44311-00	CUERPO BOMBA AGUA	HOUSING, WATER PUMP	CORPO POMPA	LOGEMENT POMPE D'EAU
64	REC90119-08M15	90119-08M15	TORNILLO CON ARANDELA	SCREW WITH WASHER	VITE CON RONDELLA	VIS AVEC RONDELLE
65	REC663-44366-00	663-44366-00	GOMA DEL SELLO DE AGUA	DAMPER, WATER SEAL	GHIERA	JOINT DE TUBE D'EAU
66	REC63D-44312-00	63D-44312-00	CUBIERTA CAJA DE BOMBA DE AGUA	PUMP COVER	COPERCHIO POMPA ACQUA	PLAQUE POMPE À EAU
67	PAT40-02000002	663-44367-00	GOMA DEL SELLO DE AGUA	GUIDE BUSHING, WATER PIPE	PARAOLIO	MAUCHON CAOUTCHOUC DE PIPE D'EAU
68	REC90430-12072	90430-12072	JUNTA	GASKET	GUARNIZIONE	JOINT
69	PAF25-02000019	90202-12060	ARANDELA PLANA	WASHER	RONDELLA PIANA	RONDELLE

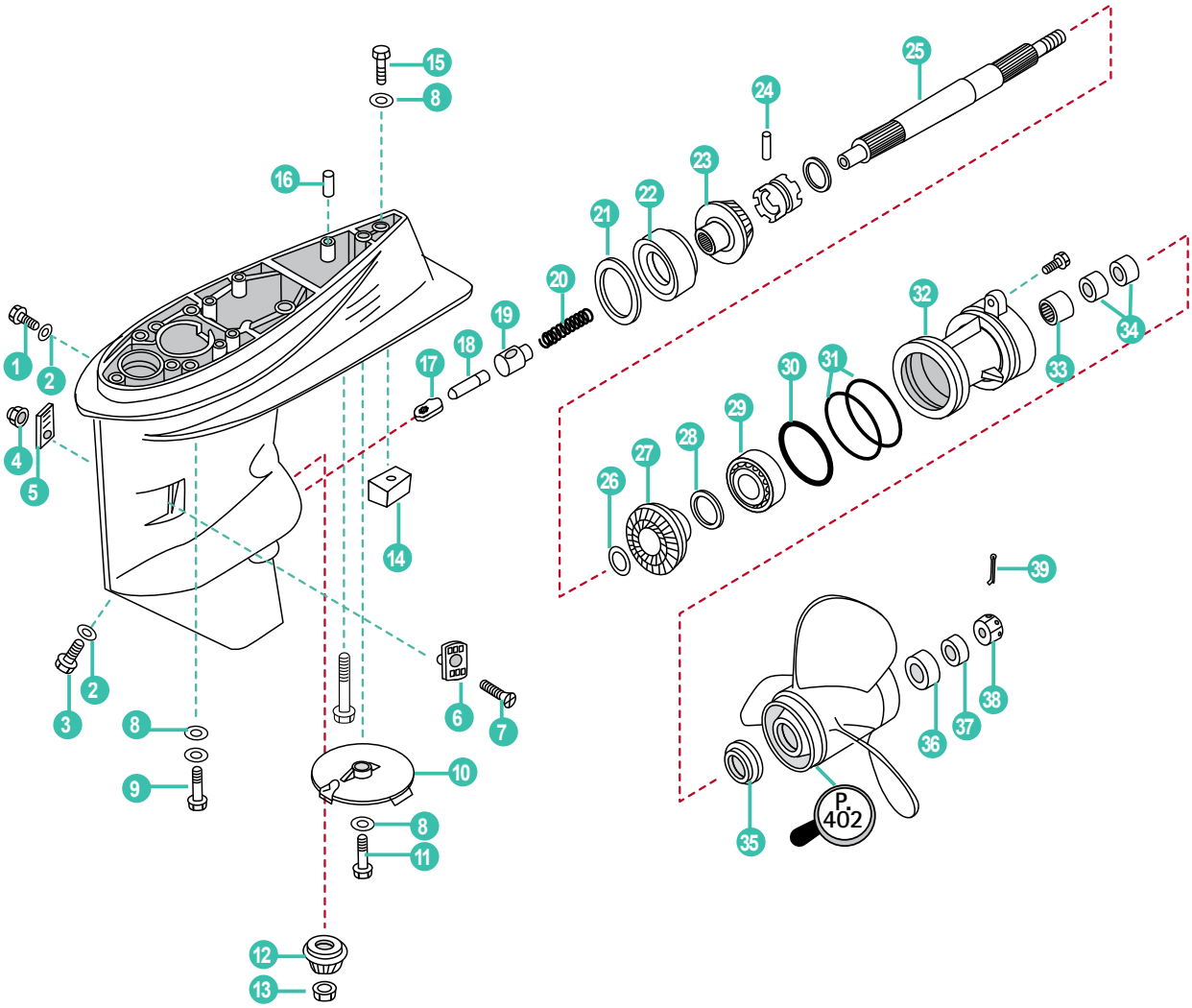



REF	OEM
REC6BG-W0078-00	6BG-W0078-00

P. 151



REF
REC80W90U3
REC80W90U6
RECGREU1
RECGREU12

P. 43

	REF	OEM				
1	REC90340-08002	90340-08002	TORNILLO DRENAJE	BOLT, DISCHARGING OIL	VITE DRENAGGIO	BOUCHON DE VIDANGE
2	REC90430-08020	90430-08003	JUNTA	GASKET	GUARNIZIONE	JOINT
3	REC688-45341-00	688-45341-10	TORNILLO DRENAJE	BOLT, DISCHARGING OIL	VITE DRENAGGIO	BOUCHON DE VIDANGE
4	PAGB/T889.1-M5	95380-05600	TUERCA	LOCK NUT	DADO	ÉCROU
5	PAT40-04000023	63D-45215-00	CUBIERTA ENTRADA AGUA	WATER INLET "B"	COPERCHIO ACQUA	GRILLE D'ENTREE D'EAU B
6	PAT40-04000022	63D-45214-00	CUBIERTA ENTRADA AGUA	WATER INLET "A"	COPERCHIO ACQUA	GRILLE D'ENTREE D'EAU A
7	PAGB/T820-M5X30	90152-05010	TORNILLO	SCREW	VITE	VIS
8	PAGB/T97.1-8	92995-10600	ARANDELA	WASHER	RONDELLA	RONDELLE
9	REC97075-10040	97075-10040	PERNO	STUD	BULLONE	BOULON
10	CM67C-45371-00A	67C-45371-00	ÁNODO	ANODE	ANODO	ANODE
11	PAGB/T5783-M8X25	97095-08025	PERNO	STUD	BULLONE	BOULON
12	REC66T-45551-00	667-45551-00	PIÑÓN	GEAR UNIT ASSY	PIGNONE	PIGNON
13	REC90170-12138	90170-12138	TUERCA	LOCK NUT	DADO	ÉCROU
14	CM67C-45251-00A	67C-45251-00	ÁNODO	ANODE	ANODO	ANODE
15	PAGB/T5783-M8X35	97095-08035	PERNO	STUD	BULLONE	BOULON
16	REC93606-12019	93606-12019	PASADOR	PIN	SPINOTTO	LEVIER
17	PAF60-04000003	62Y-44151-00	LEVA DE CAMBIO	SHIFTING CAM	LEVA CAMBIO	CAME DE CHANGEMENT
18	PAF60-04020005	63D-45635-00	ÉMBOLO	PLUNGER	BULLONE	BOUCHON
19	REC663-45634-00	663-45634-00	DESLIZADOR DEL CAMBIO	CLUTCH DOG	TRAINABILE CAMBIO	PIVOT
20	PAF60-04020002	90501-18001	MUELLE	SPRING	MOLLA	RESSORT
21	PAT40-04000004-1	663-45567-01	GRUESO 0.10 mm	SHIM 0.10 mm	SPESSORE 0.10 mm	CALE 0.10 mm
	PAT40-04000004-2	663-45567-10	GRUESO 0.12 mm	SHIM 0.12 mm	SPESSORE 0.12 mm	CALE 0.12 mm
	PAT40-04000004-3	663-45567-20	GRUESO 0.15 mm	SHIM 0.15 mm	SPESSORE 0.15 mm	CALE 0.15 mm
	PAT40-04000004-5	663-45567-40	GRUESO 0.30 mm	SHIM 0.30 mm	SPESSORE 0.30 mm	CALE 0.30 mm
22	REC93332-00003	93332-00003	COJINETE	BEARING	CUSCINETTO	ROULEMENT
23	REC66T-45560-00	66T-45560-01	PIÑON MARCHA AVANTE	FORWARD GEAR	PIGNONE MARCIA AVANTI	PIGNON MARCHE AVANT
24	REC90250-06023	90250-06023	PASADOR	PIN	SPINOTTO	PIN
25	PAF60-04020001	63D-45611-00	EJE HÉLICE	PROPELLER SHAFT	ASSE ELICA	ARBRE D'HELICE
26	REC90201-22429	90201-22429	ARANDELA	WASHER	RONDELLA	RONDELLE
27	REC66T-45571-00	667-45571-00	PIÑON MARCHA ATRÁS	REVERSE GEAR	PIGNONE MARCIA INDIETRO	PIGNON MARCHE ARRIÈRE
28	PAT40-04060005-2	63D-45577-10	GRUESO 0.12 mm	SHIM 0.12 mm	SPESSORE 0.12 mm	CALE 0.12 mm
	PAT40-04060005-3	63D-45577-20	GRUESO 0.15 mm	SHIM 0.15 mm	SPESSORE 0.15 mm	CALE 0.15 mm
	PAT40-04060005-4	63D-45577-30	GRUESO 0.18 mm	SHIM 0.18 mm	SPESSORE 0.18 mm	CALE 0.18 mm
	PAT40-04060005-5	63D-45577-40	GRUESO 0.30 mm	SHIM 0.30 mm	SPESSORE 0.30 mm	CALE 0.30 mm
	PAT40-04060005-6	63D-45577-50	GRUESO 0.40 mm	SHIM 0.40 mm	SPESSORE 0.40 mm	CALE 0.40 mm
	PAT40-04060005-7	63D-45577-60	GRUESO 0.50 mm	SHIM 0.50 mm	SPESSORE 0.50 mm	CALE 0.50 mm
29	REC93306-001U1	93306-001U1	COJINETE	BEARING	CUSCINETTO	ROULEMENT
30	REC93210-69MG6	93210-69MG6	TÓRICA	O-RING	O-RING	JOINT TORIQUE
31	REC93210-74MG5	93210-74MG5	TÓRICA	O-RING	O-RING	JOINT TORIQUE
32	REC63D-45361-02-4D	63D-45361-02-8D	DIÁBOLO	CAP, LOWER CASING	COPERCHIO CARTER INFERIORE	COUVERCLE, POMPE D'EAU
33	REC93317-22204	93317-22204	COJINETE	BEARING	CUSCINETTO	ROULEMENT
34	REC93101-22M00	93101-22M00	RETÉN DE ACEITE	OIL SEAL	PARAOLIO	JOINT SPI
35	REC663-45987-00	663-45987-02	ESPACIADOR	SPACER	DISTANZIALE	ENTRETOISE
36	REC66T-45997-00	667-45997-00	ESPACIADOR	SPACER	DISTANZIALE	ENTRETOISE
37	REC90389-22M01	90389-22M01	CASQUILLO HELICE	WASHER	GHIERA ELICA	RONDELLE D'HELICE
38	REC90171-16011	90171-16011	TUERCA	LOCK NUT	DADO	ÉCROU
39	REC91490-30025	91490-30025	PASADOR	PIN	SPINOTTO	PIN

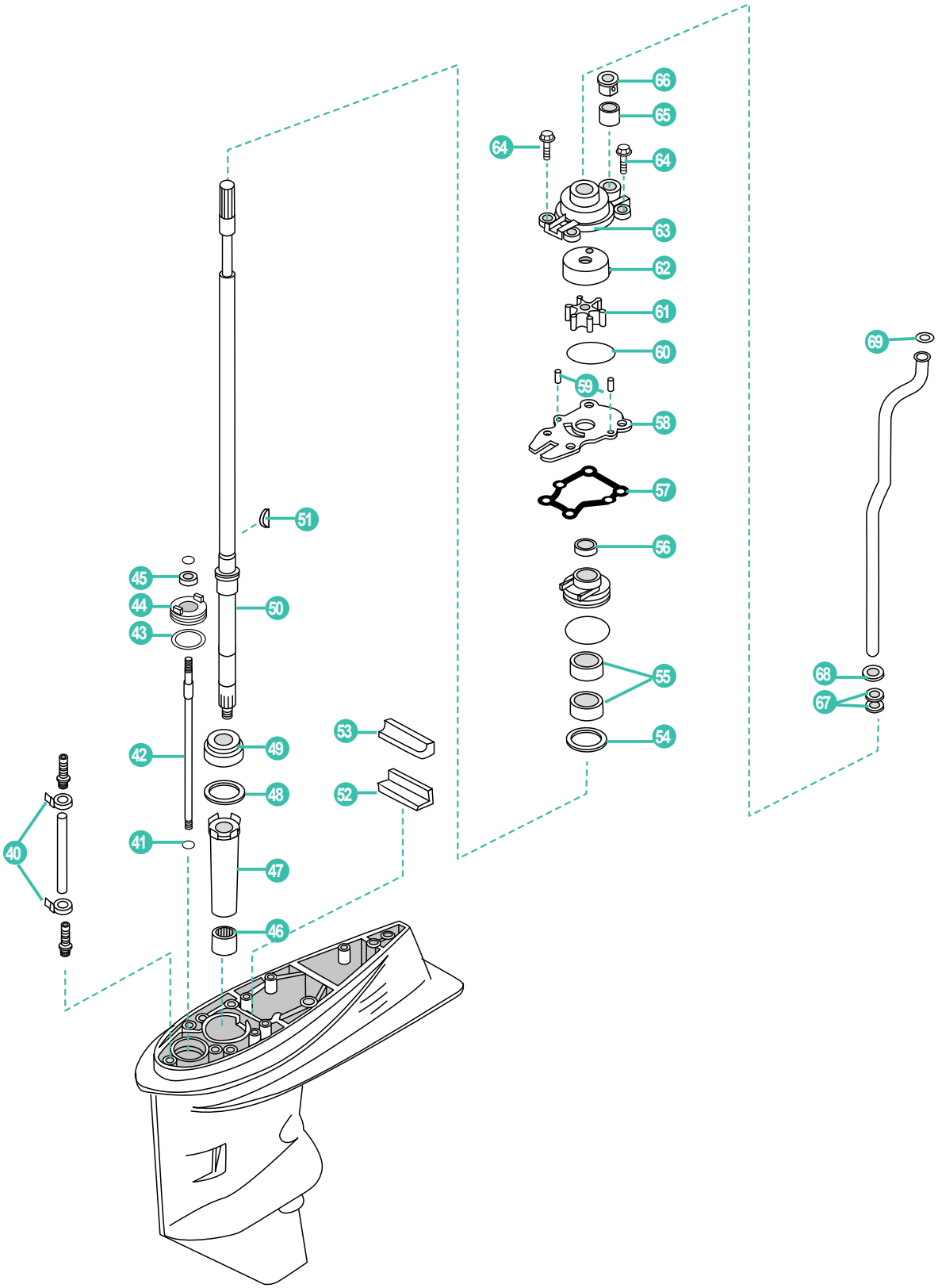
66
65
64
64
63
62
61
60
59
58
57
56
55
54
69
68
67
51
45
44
50
43
42
49
48
41
47
46
53
52
40

	REF	OEM				
40	PAHT-2.5X60	90465-11M10	BRIDA	CLAMP	FLANGIA	COLLIER
41	REC99001-08600-00	99001-08600	ARANDELA	WASHER	RONDELLA	RONDELLE
42	PA60-04000004	63D-44144-00	VARILLA DE CAMBIO	SHIFTING CAM	ASTA CAMBIO	LEVIER DE VITESSE
43	REC93210-33MG4	93210-33MG4	TÓRICA	O-RING	O-RING	JOINT TORIQUE
44	PAF60-04000101	63D-45321-00	PLACA	COVER, SHIFTING CAM	PACCA	SUPPORT
45	REC93106-09014	93106-09014	RETÉN DE ACEITE	OIL SEAL	PARAOLIO	JOINT SPI
46	REC93315-32224	93315-32224	COJINETE	BEARING	CUSCINETTO	ROULEMENT
47	PAT40-04000002	6H4-45536-00	CAMISA EJE	SLEEVE, DRIVE	TUBO GUIDA	RONDELLE
	PAT40-04000003-1	663-45587-01	GRUESO 0.10 mm	SHIM 0.10 mm	SPESSORE 0.10 mm	CALE 0.10 mm
	PAT40-04000003-2	663-45587-10	GRUESO 0.12 mm	SHIM 0.12 mm	SPESSORE 0.12 mm	CALE 0.12 mm
	PAT40-04000003-3	663-45587-20	GRUESO 0.15 mm	SHIM 0.15 mm	SPESSORE 0.15 mm	CALE 0.15 mm
48	PAT40-04000003-4	663-45587-30	GRUESO 0.18 mm	SHIM 0.18 mm	SPESSORE 0.18 mm	CALE 0.18 mm
	PAT40-04000003-5	663-45587-40	GRUESO 0.30 mm	SHIM 0.30 mm	SPESSORE 0.30 mm	CALE 0.30 mm
	PAT40-04000003-6	663-45587-50	GRUESO 0.40 mm	SHIM 0.40 mm	SPESSORE 0.40 mm	CALE 0.40 mm
	PAT40-04000003-7	663-45587-60	GRUESO 0.50 mm	SHIM 0.50 mm	SPESSORE 0.50 mm	CALE 0.50 mm
49	REC93332-00001	93332-00001	COJINETE	BEARING	CUSCINETTO	ROULEMENT
50	REC67C-45501-00	67C-45501-00	EJE VERTICAL S	DRIVE SHAFT S	ASSE VERTICALE S	ARBRE DE COMMANDE S
	REC67C-45501-10	67C-45501-10	EJE VERTICAL L	DRIVE SHAFT L	ASSE VERTICALE L	ARBRE DE COMMANDE L
51	REC90280-03M03	90280-03M03	CUÑA	KEY WOODRUFF	CHIAVETTA	CLAVETTE
52	REC663-45376-00	663-45376-00	GUÍA SELLO DE GOMA	GUIDE RUB. SEAL	GUIDA PARAOLIO	GUIDE EN CAOUTCHOUC
53	PAT40-04000014	63D-45375-00	SELLO DE GOMA	WATER ENVELOP	PARAOLIO	SUPPORT EN CAOUTCHOUC
54	PAT40-04000008	90201-27M00	ARANDELA	WASHER	RONDELLA	RONDELLE
55	REC93101-22M60	93101-22M60	RETÉN DE ACEITE	OIL SEAL	PARAOLIO	JOINT SPI
56	PAT40-04000009	66T-45344-01	CUBIERTA SELLO DE ACEITE	COVER, OIL SEAL	PARAOLIO	BAGUE EN CAOUTCHOUC
57	REC63D-44316-00	63D-44316-00	JUNTA	GASKET	GUARNIZIONE	JOINT
58	REC63D-44323-00	63D-44323-00	PLACA EXTERIOR	OUTER PLATE	PLACCA ESTERIORE	PLAQUE DE POMPE A EAU
59	PAF25-04000007	93604-08062	PASADOR	PIN	SPINOTTO	PIN
60	REC93210-59MG7	93210-59MG7	TÓRICA	O-RING	O-RING	JOINT TORIQUE
61	REC6H4-44352-02	6H4-44352-02	TURBINA	IMPELLER	GIRANTE	TURBINE
62	REC63D-44322-00	63D-44322-00	TAPA, BOMBA AGUA	COVER, INNER WATER PUMP	COPERCHIO, POMPE D'EAU	INSERT DE POMPE A EAU
63	PAT40-04000201	66T-44311-00	CUERPO BOMBA AGUA	HOUSING, WATER PUMP	CORPO POMPA	CORPS DE POMPE A EAU
64	REC90119-08M15	90119-08M15	TORNILLO CON ARANDELA	SCREW WITH WASHER	VITE CON RONDELLA	VIS PLUS RONDELLE
65	REC663-44366-00	663-44366-00	GOMA DEL SELLO DE AGUA	DAMPER, WATER SEAL	PARAOLIO	TUBE DE POMPE A EAU
66	REC63D-44312-00	63D-44312-00	CUBIERTA CAJA DE BOMBA DE AGUA	PUMP COVER	COPERCHIO CASSA POMPA ACQUA	BAGUE DE POMPE A EAU
67	PAT40-02000002	663-44367-00	GOMA DEL SELLO DE AGUA	DAMPER, WATER SEAL	PARAOLIO	JOINT
68	REC90430-12072	90430-12072	JUNTA	GASKET	GUARNIZIONE	JOINT
69	PAF25-02000019	90202-12060	ARANDELA PLANA	WASHER	RONDELLA PIANA	RONDELLE

4T STROKES F40A (66W0 & 66W1) • F50A/T/D

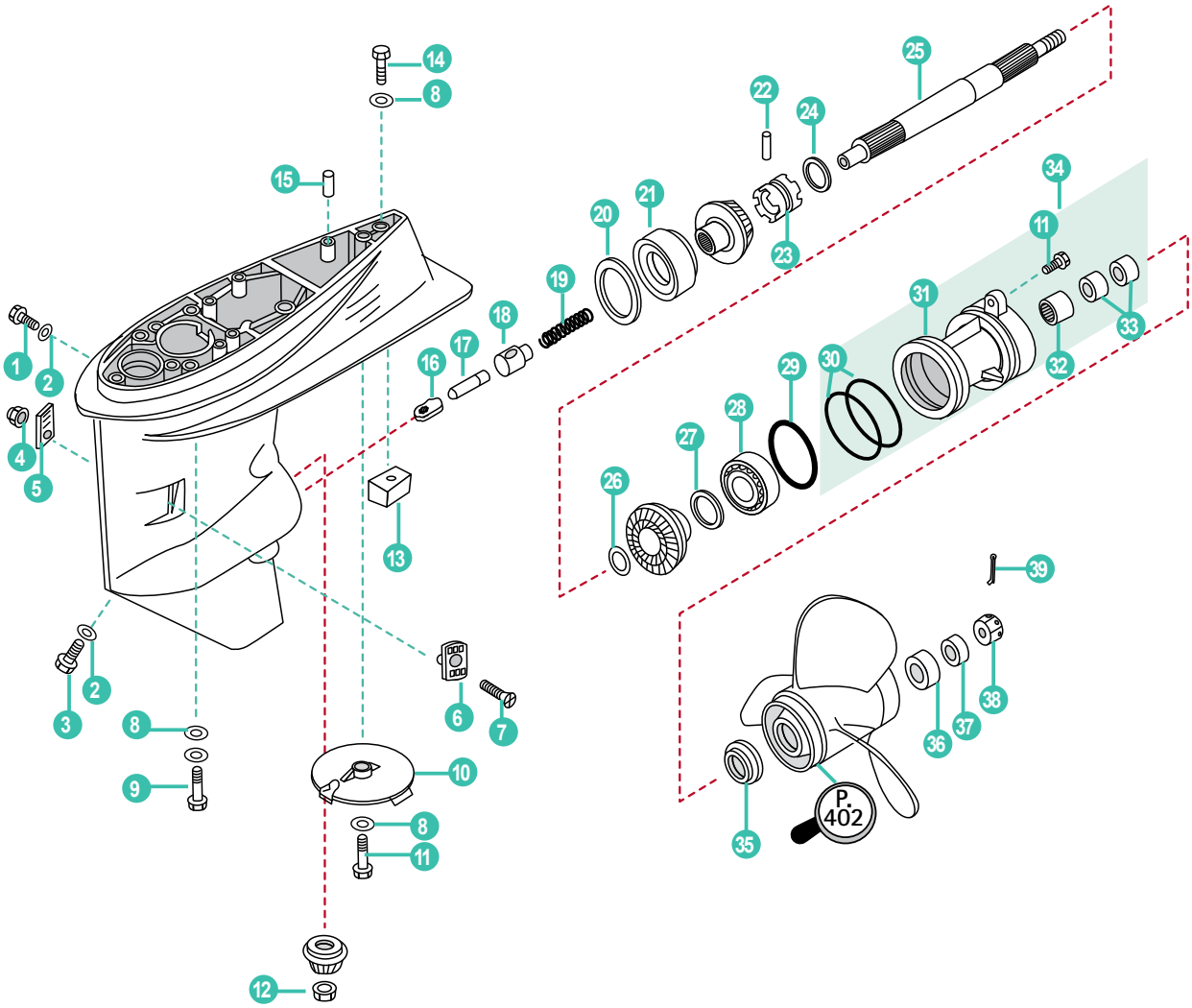



REF	OEM
REC62Y-W0001-22	62Y-W0001-22

P. 146



REF	OEM
REC63D-W0078-01	63D-W0078-01

P. 151



REF
REC80W90U3
REC80W90U6
RECGREU1
RECGREU12

P. 43

	REF	OEM				
1	REC90340-08002	90340-08002	TORNILLO DRENAJE	BOLT, DISCHARGING OIL	VITE DRENAGGIO	BOUCHON DE VIDANGE
2	REC90430-08020	90430-08003	JUNTA	GASKET	GUARNIZIONE	JOINT
3	REC688-45341-00	688-45341-10	TORNILLO DRENAJE	BOLT, DISCHARGING OIL	VITE DRENAGGIO	BOUCHON DE VIDANGE
4	PAGB/T889.1-M5	95380-05600	TUERCA	LOCK NUT	DADO	ÉCROU
5	PAT40-04000023	63D-45215-00	CUBIERTA ENTRADA AGUA	WATER INLET "B"	COPERCHIO ACQUA	GRILLE D'ENTREE D'EAU B
6	PAT40-04000022	63D-45214-00	CUBIERTA ENTRADA AGUA	WATER INLET "A"	COPERCHIO ACQUA	GRILLE D'ENTREE D'EAU A
7	PAGB/T820-M5X30	90152-05M06	TORNILLO	SCREW	VITE	VIS
8	PAGB/T97.1-8	92995-10600	ARANDELA	WASHER	RONDELLA	RONDELLE
9	REC97075-10040	97075-10040	PERNO	STUD	BULLONE	BOULON
10	CM67C-45371-00A	67C-45371-00	ÁNODO	ANODE	ANODO	ANODE
11	PAGB/T5783-M8X25	97095-08025	PERNO	STUD	BULLONE	BOULON
12	REC90170-12138	90170-12138	TUERCA	LOCK NUT	DADO	ÉCROU
13	CM67C-45251-00A	67C-45251-00	ÁNODO	ANODE	ANODO	ANODE
14	PAGB/T5783-M8X35	97095-08035	PERNO	STUD	BULLONE	BOULON
15	REC93606-12019	93606-12019	PASADOR	PIN	SPINOTTO	PIN
16	PAF60-04000003	62Y-44151-00	LEVA DE CAMBIO	SHIFTING CAM	LEVA DE CAMBIO	CAME DE CHANGEMENT
17	PAF60-04020005	63D-45635-00	ÉMBOLO	PLUNGER	BULLONE	BOUCHON
18	REC663-45634-00	663-45634-00	DESLIZADOR DEL CAMBIO	CLUTCH DOG	TRAINABILE CAMBIO	PIVOT
19	PAF60-04020002	90501-18001	MUELLE	SPRING	MOLLA	RESSORT
20	PAT40-04000004-1	663-45567-01	GRUESO 0.10 mm	SHIM 0.10 mm	SPESSORE 0.10 mm	CALE 0.10 mm
	PAT40-04000004-2	663-45567-10	GRUESO 0.12 mm	SHIM 0.12 mm	SPESSORE 0.12 mm	CALE 0.12 mm
	PAT40-04000004-3	663-45567-20	GRUESO 0.15 mm	SHIM 0.15 mm	SPESSORE 0.15 mm	CALE 0.15 mm
	PAT40-04000004-5	663-45567-40	GRUESO 0.30 mm	SHIM 0.30 mm	SPESSORE 0.30 mm	CALE 0.30 mm
21	REC93332-00003	93332-00003	COJINETE	BEARING	CUSCINETTO	ROULEMENT
22	REC90250-06023	90250-06023	PASADOR	PIN	SPINOTTO	LEVIER
23	PAF60-04020003	62Y-45631-00	EMBRAGUE DE GARRA	CLUTCH DOG	SELETTORE	CRABOT
24	PAT40-04050005	67C-45633-00	ANILLO DEL PASADOR	ANNULAR SPRING, CLUTCH	PARAOLIO	RESSORT
25	PAF60-04020001	63D-45611-00	EJE HÉLICE	PROPELLER SHAFT	ASSE ELICA	ARBRE D'HELICE
26	REC90201-22429	90201-22429	ARANDELA	WASHER	RONDELLA	RONDELLE
27	PAT40-04060005-2	63D-45577-10	GRUESO 0.12 mm	SHIM 0.12 mm	SPESSORE 0.12 mm	CALE 0.12 mm
	PAT40-04060005-3	63D-45577-20	GRUESO 0.15 mm	SHIM 0.15 mm	SPESSORE 0.15 mm	CALE 0.15 mm
	PAT40-04060005-4	63D-45577-30	GRUESO 0.18 mm	SHIM 0.18 mm	SPESSORE 0.18 mm	CALE 0.18 mm
	PAT40-04060005-5	63D-45577-40	GRUESO 0.30 mm	SHIM 0.30 mm	SPESSORE 0.30 mm	CALE 0.30 mm
	PAT40-04060005-6	63D-45577-50	GRUESO 0.40 mm	SHIM 0.40 mm	SPESSORE 0.40 mm	CALE 0.40 mm
	PAT40-04060005-7	63D-45577-60	GRUESO 0.50 mm	SHIM 0.50 mm	SPESSORE 0.50 mm	CALE 0.50 mm
28	REC93306-001U1	93306-001U1	COJINETE	BEARING	CUSCINETTO	ROULEMENT
29	REC93210-69MG6	93210-69MG6	TÓRICA	O-RING	O-RING	JOINT TORIQUE
30	REC93210-74MG5	93210-74MG5	TÓRICA	O-RING	O-RING	JOINT TORIQUE
31	REC63D-45361-02-4D	63D-45361-02-4D	DIÁBOLO	CAP, LOWER CASING	COPERCHIO CARTER INFERIORE	DIABOLO
32	REC93317-22204	93317-22204	COJINETE	BEARING	CUSCINETTO	ROULEMENT
33	REC93101-22M00	93101-22M00	RETÉN DE ACEITE	OIL SEAL	PARAOLIO	JOINT SPI
34	PAF60-04030000		FUNDA INFERIOR COMPLETA	COVER ASSY, LOWER CASING	COPERCHIO CARTER COMPLETA	DIABOLO COMPLET
35	REC663-45987-00	663-45987-02	ESPACIADOR	SPACER	DISTANZIALE	ENTRETOISE
36	REC66T-45997-00	667-45997-00	ESPACIADOR	SPACER	DISTANZIALE	ENTRETOISE
37	REC90389-22M01	90389-22M01	CASQUILLO HELICE	WASHER	GHIERA ELICA	RONDELLE D' HELICE
38	REC90171-16011	90171-16011	TUERCA	LOCK NUT	DADO	ÉCROU
39	REC91490-30025	91490-30025	PASADOR	PIN	SPINOTTO	CLAVETTE

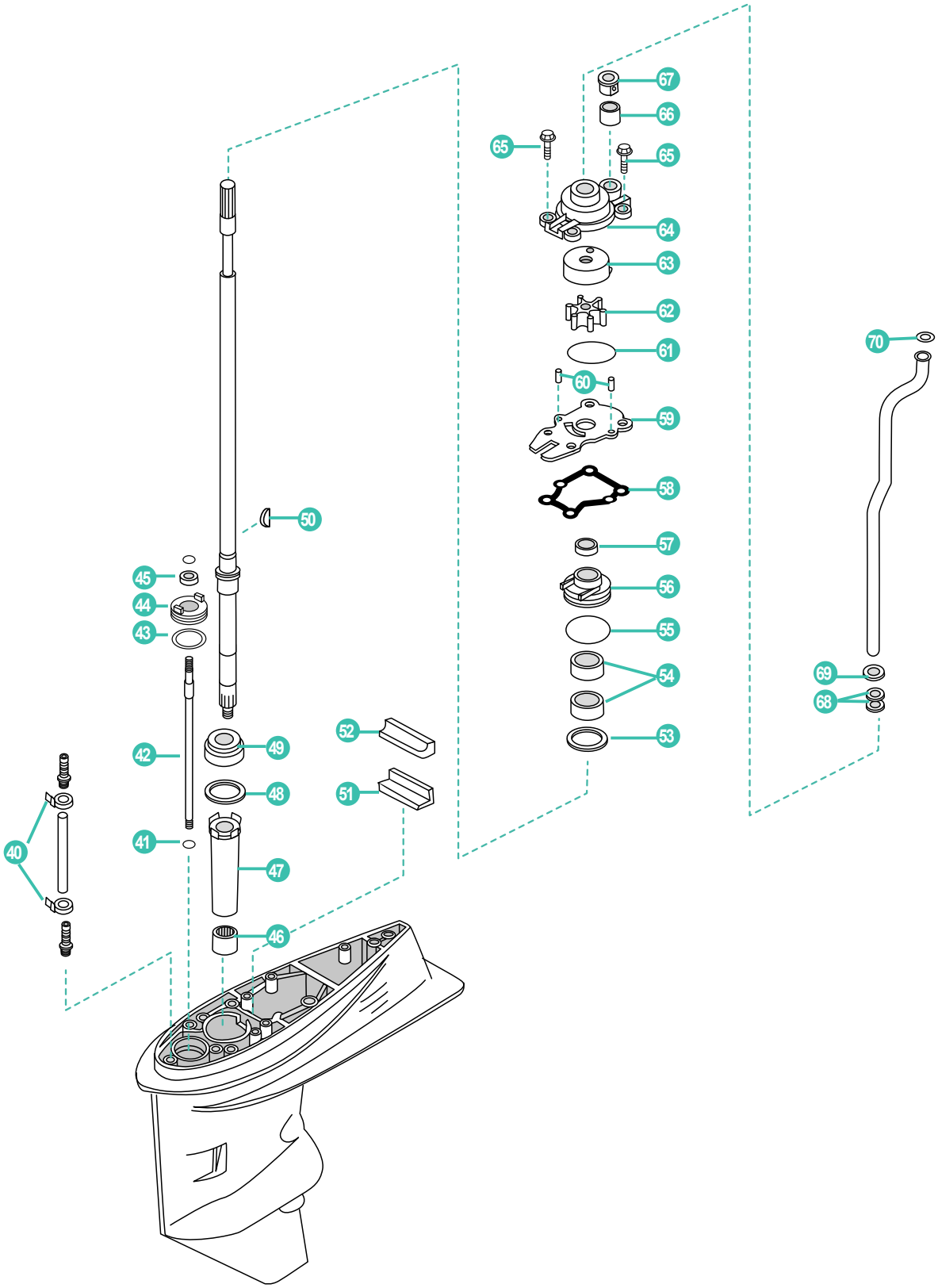
67
66
65
65
64
63
62
61
60
59
58
57
56
55
54
53
70
69
68
50
45
44
43
42
49
48
41
47
46
52
51
40

	REF	OEM				
40	PAHT-2.5X60	90465-11M10	BRIDA	CLAMP	FLANGIA	COLLIER
41	REC99001-08600-00	99001-08600	ARANDELA	WASHER	RONDELLA	RONDELLE
42	PA60-04000004	63D-44144-00	VARILLA DE CAMBIO	SHIFTING CAM	ASTA CAMBIO	LEVIER DE VITESSE
43	REC93210-33MG4	93210-33MG4	TÓRICA	O-RING	O-RING	JOINT TORIQUE
44	PAF60-04000101	63D-45321-00	PLACA	COVER, SHIFTING CAM	PLACCA	SUPPORT
45	REC93106-09014	93106-09014	RETÉN DE ACEITE	OIL SEAL	PARAOLIO	JOINT SPI
46	REC93315-32224	93315-32224	COJINETE	BEARING	CUSCINETTO	ROULEMENT
47	PAT40-04000002	6H4-45536-00	CAMISA EJE	SLEEVE, DRIVE	TUBO GUIDA	BAGUE NYLON
	PAT40-04000003-1	663-45587-01	GRUESO 0.10 mm	SHIM 0.10 mm	SPESSORE 0.10 mm	CALE 0.10 mm
	PAT40-04000003-2	663-45587-10	GRUESO 0.12 mm	SHIM 0.12 mm	SPESSORE 0.12 mm	CALE 0.12 mm
	PAT40-04000003-3	663-45587-20	GRUESO 0.15 mm	SHIM 0.15 mm	SPESSORE 0.15 mm	CALE 0.15 mm
48	PAT40-04000003-4	663-45587-30	GRUESO 0.18 mm	SHIM 0.18 mm	SPESSORE 0.18 mm	CALE 0.18 mm
	PAT40-04000003-5	663-45587-40	GRUESO 0.30 mm	SHIM 0.30 mm	SPESSORE 0.30 mm	CALE 0.30 mm
	PAT40-04000003-6	663-45587-50	GRUESO 0.40 mm	SHIM 0.40 mm	SPESSORE 0.40 mm	CALE 0.40 mm
	PAT40-04000003-7	663-45587-60	GRUESO 0.50 mm	SHIM 0.50 mm	SPESSORE 0.50 mm	CALE 0.50 mm
49	REC93332-00001	93332-00001	COJINETE	BEARING	CUSCINETTO	ROULEMENT
50	REC90280-03024	90280-03024	CUÑA	KEY WOODRUFF	CHIAVETTA	CLAVETTE
51	REC663-45376-00	663-45376-00-94	GUÍA SELLO DE GOMA	GUIDE RUB SEAL	GUIDA PARAOLIO	GUIDE
52	PAT40-04000014	63D-45375-00	SELLO DE GOMA	WATER ENVELOP	PARAOLIO	PROTECTION TUYAU D'EAU
53	PAT40-04000008	90201-27M00	ARANDELA	WASHER	RONDELLA	RONDELLE
54	REC93101-25M57	93101-25M57	RETÉN DE ACEITE	OIL SEAL	PARAOLIO	JOINT SPI
55	REC93210-48MG8	93210-48MG8	TÓRICA	O-RING	O-RING	JOINT TORIQUE
56	REC63D-44341-00	63D-44341-00	CAJA DE BOMBA	HOUSING PUMP	CASSA POMPA	BOITIER DE POMPE A EAU
57	PAT40-04000009	66T-45344-01	CUBIERTA SELLO DE ACEITE	COVER SEAL OIL	COPERCHIO PARAOLIO	JOINT SPI
58	REC63D-44316-00	63D-44316-00	JUNTA	GASKET	GUARNIZIONE	JOINT
59	REC63D-44323-00	63D-44323-00	PLACA EXTERIOR	OUTER PLATE	PIASTRA POMPA ACQUA	PLAQUE DE POMPE À EAU
60	PAF25-04000007	93604-08062	PASADOR	PIN	SPINOTTO	PIN
61	REC93210-59MG7	93210-59MG7	TÓRICA	O-RING	O-RING	JOINT TORIQUE
62	REC6H4-44352-02	6H4-44352-00	TURBINA	IMPELLER	GIRANTE	TURBINE
63	REC63D-44322-00	63D-44322-00	TAPA, BOMBA AGUA	COVER, INNER WATER PUMP	COPERCHIO, POMPA ACQUA	INSERT DE POMPE A EAU
64	REC63D-44311-01	63D-44311-00	CUERPO BOMBA AGUA	HOUSING, WATER PUMP	CORPO POMPA	CORPS DE POMPE A EAU
65	REC90119-08M15	90119-08M15	TORNILLO CON ARANDELA	SCREW WITH WASHER	VITE CON RONDELLA	VIS AVEC RONDELLE
66	REC663-44366-00	663-44366-00	GOMA DEL SELLO DE AGUA	GUIDE BUSHING, WATER PIPE	PARAOLIO	MAUCHON CAOUTCHOUC DE PIPE D'EAU
67	REC63D-44312-00	63D-44312-00	CUBIERTA CAJA DE BOMBA DE AGUA	PUMP COVER	COPERCHIO CORPO ACQUA	PLAQUE POMPE À EAU
68	PAT40-02000002	663-44367-00	GOMA DEL SELLO DE AGUA	GUIDE BUSHING, WATER PIPE	PARAOLIO	JOINT CAHOUTCHOUC
69	REC90430-12072	90430-12072	JUNTA	GASKET	GUARNIZIONE	JOINT
70	PAF25-02000019	90202-12060	ARANDELA PLANA	WASHER	RONDELLA PIANA	RONDELLE

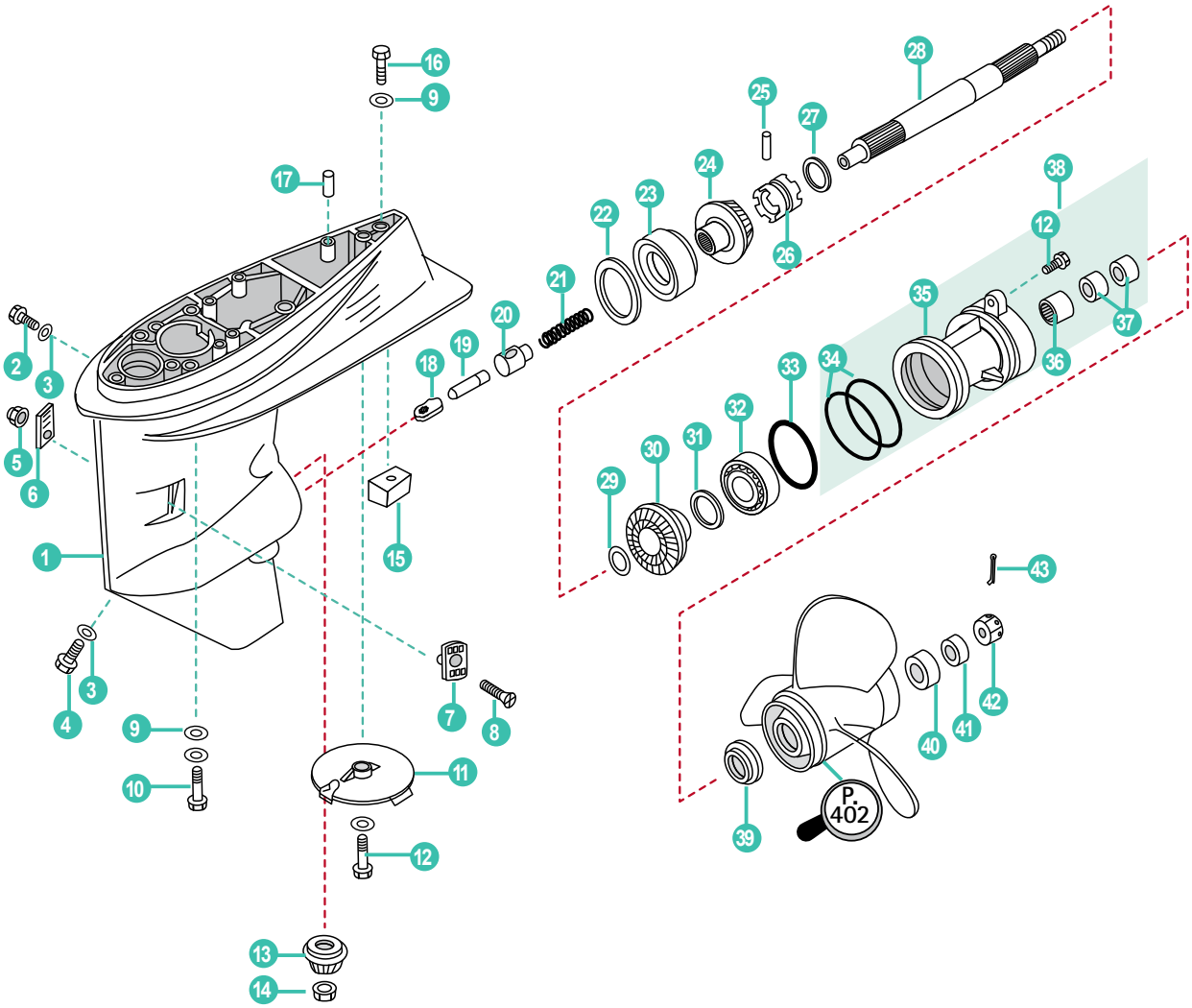

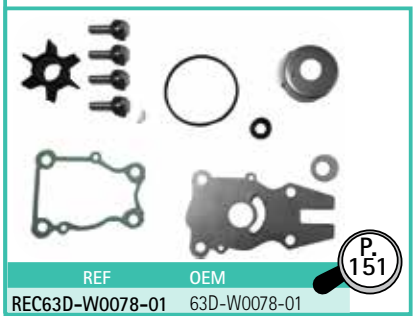

REF	OEM
REC63D-W0078-01	63D-W0078-01

P. 151



REF
REC80W90U3
REC80W90U6
RECGREU1
RECGREU12

P. 43

	REF	OEM				
	PAF60-04000000	69W-45300-04-8D	COLA COMPLETA L	COMPLETE GEAR HOUSING L	PIEDE COMPLETO L	EMBASE COMPLETE L
1	PAF60-04000001	69W-45301-00-8D	CARCASA COMPLETA	LOWER CASING	CARCASSA COMPLETA	CARTER D'EMBASE
2	REC90340-08002	90340-08002	TORNILLO DRENAJE	BOLT, DISCHARGING OIL	VITE DRENAGGIO	BOUCHON DE VIDANGE
3	REC90430-08020	90430-08003	JUNTA	GASKET	GUARNIZIONE	JOINT
4	REC688-45341-00	688-45341-10	TORNILLO DRENAJE	BOLT, DISCHARGING OIL	VITE DRENAGGIO	VIS DE VIDANGE
5	PAGB/T889.1-M5	95380-05600	TUERCA	LOCK NUT	DADO	ÉCROU
6	PAT40-04000023	63D-45215-00	CUBIERTA ENTRADA AGUA	WATER INLET "B"	COPERCHIO ACQUA	GRILLE D'ENTREE D'EAU B
7	PAT40-04000022	63D-45214-00	CUBIERTA ENTRADA AGUA	WATER INLET "A"	COPERCHIO ACQUA	GRILLE D'ENTREE D'EAU A
8	PAGB/T820-M5X30	90152-05010	TORNILLO	SCREW	VITE	VIS
9	PAGB/T97.1-8	92995-10600	ARANDELA	WASHER	RONDELLA	RONDELLE
10	REC97075-10040	97075-10040	PERNO	STUD	BULLONE	BOULON
11	CM67C-45371-00A	67C-45371-00	ÁNODO	ANODE	ANODO	ANODE
12	PAGB/T5783-M8X25	97095-08025	PERNO	STUD	BULLONE	BOULON
13	PAF60-04000002	69W-45551-00	PIÑÓN	PINION	PIGNONE	PIGNON
14	REC90170-12138	90170-12138	TUERCA	LOCK NUT	DADO	ÉCROU
15	CM67C-45251-00A	67C-45251-00	ÁNODO	ANODE	ANODO	ANODE
16	PAGB/T5783-M8X35	97095-08035	PERNO	STUD	BULLONE	BOULON
17	REC93606-12019	93606-12019	PASADOR	PIN	SPINOTTO	PIN
18	PAF60-04000003	62Y-44151-00	LEVA DE CAMBIO	SHINFTING CAM	LEVA DE CAMBIO	CAME DE CHANGEMENT
19	PAF60-04020005	63D-45635-00	ÉMBOLO	PLUNGER	BULLONE	BOUCHON
20	REC663-45634-00	663-45634-00	DESLIZADOR DEL CAMBIO	CLUTCH DOG	TRAINABILE CAMBIO	PIVOT
21	PAF60-04020002	90501-18001	MUELLE	SPRING	MOLLA	RESSORT
	PAT40-04000004-1	663-45567-01	GRUESO 0.10 mm	SHIM 0.10 mm	SPESSORE 0.10 mm	CALE 0.10 mm
22	PAT40-04000004-2	663-45567-10	GRUESO 0.12 mm	SHIM 0.12 mm	SPESSORE 0.12 mm	CALE 0.12 mm
	PAT40-04000004-3	663-45567-20	GRUESO 0.15 mm	SHIM 0.15 mm	SPESSORE 0.15 mm	CALE 0.15 mm
	PAT40-04000004-5	663-45567-40	GRUESO 0.30 mm	SHIM 0.30 mm	SPESSORE 0.30 mm	CALE 0.30 mm
23	PAKOYOHI-CAP322/32	93332-00092	COJINETE	BEARING	CUSCINETTO	ROULEMENT
24	PAF60-04000600	69W-45560-00	ENGRANAJE MARCHA AVANTE	FORWARD GEAR ASSY	PIGNONE MARCIA AVANTI	PIGNON MARCHE AVANT
25	REC90250-06023	90250-06023	PASADOR	PIN	SPINOTTO	LEVIER
26	PAF60-04020003	62Y-45631-00	EMBRAGUE DE GARRA	CLUTCH DOG	SELETTORE	CRABOT
27	PAT40-04050005	67C-45633-00	ANILLO DEL PASADOR	ANNULAR SPRING, CLUTCH	PARAOLIO	RESSORT
28	PAF60-04020001	63D-45611-00	EJE HÉLICE	PROPELLER SHAFT	ASSE ELICA	ARBRE D'HELICE
29	PAT40-04050007	90201-22008	ARANDELA	WASHER	RONDELLA	RONDELLE
30	PAF60-04000500	62Y-45571-00	PIÑÓN MARCHA ATRÁS	REVERSE GEAR	PIGNONE MARCIA INDIETRO	PIGNON MARCHE AR
	PAT40-04060005-2	63D-45577-10	GRUESO 0.12 mm	SHIM 0.12 mm	SPESSORE 0.12 mm	CALE 0.12 mm
	PAT40-04060005-3	63D-45577-20	GRUESO 0.15 mm	SHIM 0.15 mm	SPESSORE 0.15 mm	CALE 0.15 mm
31	PAT40-04060005-4	63D-45577-30	GRUESO 0.18 mm	SHIM 0.18 mm	SPESSORE 0.18 mm	CALE 0.18 mm
	PAT40-04060005-5	63D-45577-40	GRUESO 0.30 mm	SHIM 0.30 mm	SPESSORE 0.30 mm	CALE 0.30 mm
	PAT40-04060005-6	63D-45577-50	GRUESO 0.40 mm	SHIM 0.40 mm	SPESSORE 0.40 mm	CALE 0.40 mm
	PAT40-04060005-7	63D-45577-60	GRUESO 0.50 mm	SHIM 0.50 mm	SPESSORE 0.50 mm	CALE 0.50 mm
32	REC93306-001U1	93306-001U1	COJINETE	BEARING	CUSCINETTO	ROULEMENT
33	REC93210-69MG6	93210-69MG6	TÓRICA	O-RING	O-RING	JOINT TORIQUE
34	REC93210-74MG5	93210-74MG5	TÓRICA	O-RING	O-RING	JOINT TORIQUE
35	REC63D-45361-02-4D	63D-45361-02-8D	DIÁBOLO	CAP, LOWER CASING	COPERCHIO CARTER INFERIORE	COUVERCLE, POMPE D'EAU
36	REC93317-22204	93317-22204	COJINETE	BEARING	CUSCINETTO	PALIER
37	REC93101-22M00	93101-22M00	RETÉN DE ACEITE	OIL SEAL	PARAOLIO	JOINT SPI
38	PAF60-04030000		FUNDA INFERIOR COMPLETA	COVER ASSY, LOWER CASING	COPERCHIO CARTER COMPLETA	COUVERCLE INFERIEUR EMBASE
39	REC663-45987-00	663-45987-02	ESPACIADOR	SPACER	DISTANZIALE	ENTRETOISE
40	REC66T-45997-00	667-45997-00	ESPACIADOR	SPACER	DISTANZIALE	ENTRETOISE
41	REC90389-22M01	90389-22M01	CASQUILLO HÉLICE	WASHER	GHIERA ELICA	RONDELLE D'HELICE
42	REC90171-16011	90171-16011	TUERCA	LOCK NUT	DADO	ÉCROU
43	REC91490-30025	91490-30025	PASADOR	PIN	SPINOTTO	CLAVETTE

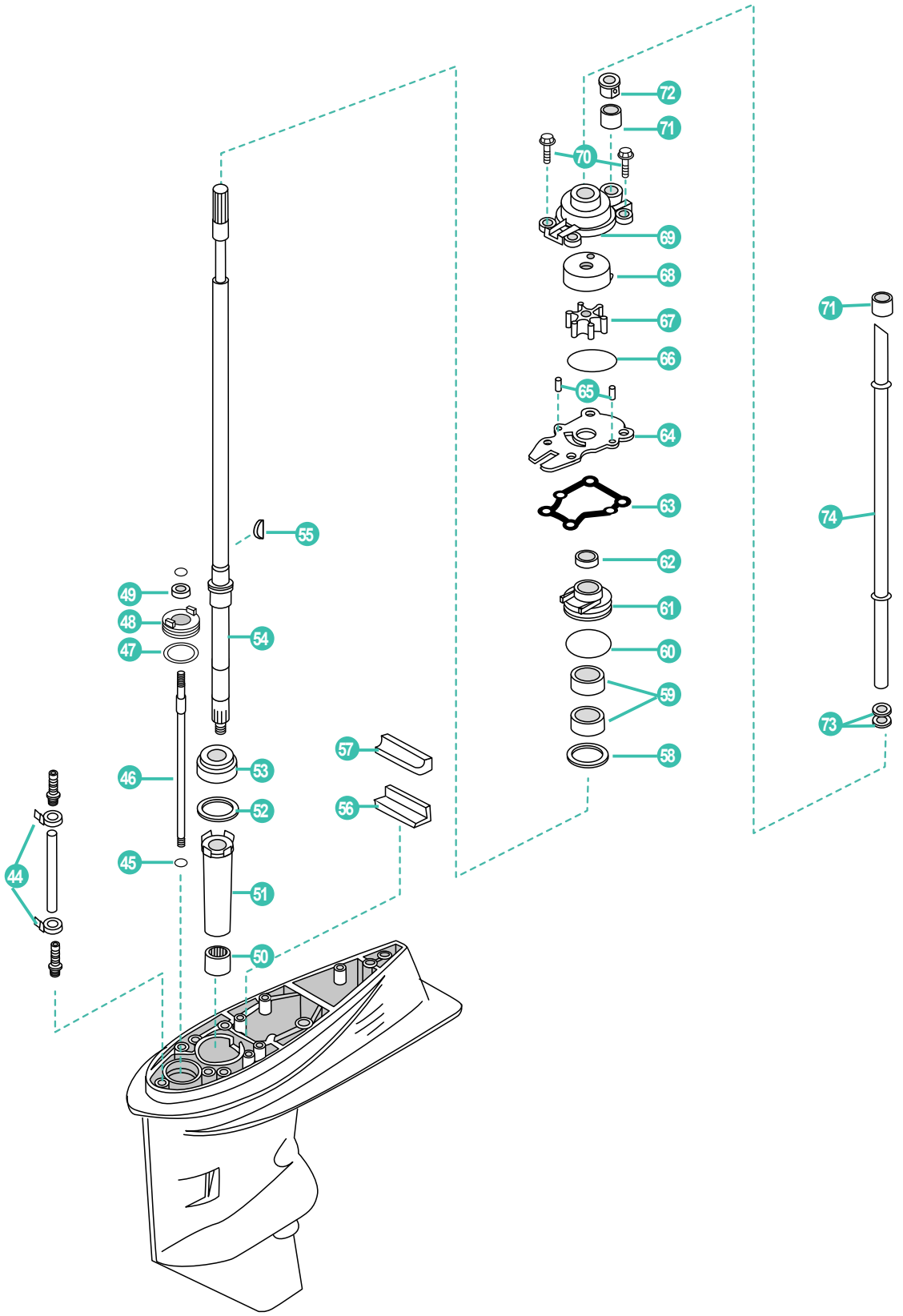
72
71
70
69
68
67
66
65
64
63
62
61
60
59
58
71
74
73
55
49
48
47
54
46
53
52
45
51
50
57
56
44

	REF	OEM				
44	PAHT-2.5X60	90465-11M10	BRIDA	CLAMP	FLANGIA	COLLIER
45	REC99001-08600-00	99001-08600	ARANDELA	WASHER	RONDELLA	RONDELLE
46	PA60-04000004	63D-44144-00	VARILLA DE CAMBIO	SHIFTING CAM	ASTICELLA DEL CAMBIO	CAME DE CHANGEMENT
47	REC93210-33MG4	93210-33MG4	TÓRICA	O-RING	O-RING	JOINT TORIQUE
48	PAF60-04000101	63D-45321-00	PLACA	COVER, SHIFTING CAM	PLACCA	SUPPORT
49	REC93106-09014	93106-09014	RETÉN DE ACEITE	OIL SEAL	PARAOLIO	JOINT SPI
50	REC93315-32224	93315-32224	COJINETE	BEARING	CUSCINETTO	PALIER
51	PAT40-04000002	6H4-45536-00	CAMISA EJE	SLEEVE, DRIVE	TUBO GUIDA	RONDELLE
	PAT40-04000003-1	663-45587-01	GRUESO 0.10 mm	SHIM 0.10 mm	SPESSORE 0.10 mm	CALE 0.10 mm
	PAT40-04000003-2	663-45587-10	GRUESO 0.12 mm	SHIM 0.12 mm	SPESSORE 0.12 mm	CALE 0.12 mm
	PAT40-04000003-3	663-45587-20	GRUESO 0.15 mm	SHIM 0.15 mm	SPESSORE 0.15 mm	CALE 0.15 mm
52	PAT40-04000003-4	663-45587-30	GRUESO 0.18 mm	SHIM 0.18 mm	SPESSORE 0.18 mm	CALE 0.18 mm
	PAT40-04000003-5	663-45587-40	GRUESO 0.30 mm	SHIM 0.30 mm	SPESSORE 0.30 mm	CALE 0.30 mm
	PAT40-04000003-6	663-45587-50	GRUESO 0.40 mm	SHIM 0.40 mm	SPESSORE 0.40 mm	CALE 0.40 mm
	PAT40-04000003-7	663-45587-60	GRUESO 0.50 mm	SHIM 0.50 mm	SPESSORE 0.50 mm	CALE 0.50 mm
53	REC93332-00001	93332-00001	COJINETE	BEARING	CUSCINETTO	ROULEMENT
54	PAF60-04010000	69W-45501-00	EJE VERTICAL COMPLETO	DRIVE SHAFT	ASSE VERTICALE	ARBRE DE COMMANDE
55	REC90280-03024	90280-03024	CUÑA	KEY WOODRUFF	CHIAVETTA	CLAVETTE
56	REC663-45376-00	663-45376-00-94	GUÍA SELLO DE GOMA	GUIDE RUB. SEAL	GUIDA PARAOLIO	GUIDE
57	PAT40-04000014	63D-45375-00	SELLO DE GOMA	WATER ENVELOP	PARAOLIO	PROTECTION TUYAU D'EAU
58	PAT40-04000008	90201-27M00	ARANDELA	WASHER	RONDELLA	RONDELLE
59	REC93101-25M57	93101-25M57	RETÉN DE ACEITE	OIL SEAL	PARAOLIO	JOINT SPI
60	PAJASOF40424-050	93210-48001	TÓRICA	O-RING	O-RING	JOINT TORIQUE
61	PAT40-04040001	6BG-44341-00	CAJA DE BOMBA	CASING A, OIL SEAL	CASSA POMPA	LOGEMENT JOINT SPI
62	PAF60-04000008	63D-45344-00	CUBIERTA SELLO DE ACEITE	COVER, OIL SEAL	PARAOLIO	COUVERTURE JOINT D'HUILE
63	REC63D-44316-00	63D-44316-00	JUNTA	GASKET	GUARNIZIONE	JOINT
64	REC63D-44323-00	63D-44323-00	PLACA EXTERIOR	WATER PLATE	PLACCA ESTERNA	PLAQUE DE POMPE À EAU
65	PAF25-04000007	93604-08062	PASADOR	PIN	SPINOTTO	LEVIER
66	REC93210-59MG7	93210-59MG7	TÓRICA	O-RING	O-RING	JOINT TORIQUE
67	REC6H3-44352-00	6H3-44352-00	TURBINA	IMPELLER	GIRANTE	TURBINE
68	REC63D-44322-00	63D-44322-00	TAPA, BOMBA AGUA	COVER, INNER WATER PUMP	COPERCHIO, POMPE D'EAU	INSERT DE POMPE A EAU
69	REC63D-44311-01	63D-44311-00	CUERPO BOMBA AGUA	HOUSING, WATER PUMP	CORPO POMPA	CORPS DE POMPE A EAU
70	REC90119-08M15	90119-08M15	TORNILLO CON ARANDELA	SCREW WITH WASHER	VITE CON RONDELLA	VIS AVEC RONDELLE
71	REC663-44366-00	663-44366-00	GOMA DEL SELLO DE AGUA	GUIDE BUSHING, WATER PIPE	PARAOLIO	GUIDE CAOUTCHOUC
72	REC63D-44312-00	63D-44312-00	CUBIERTA CAJA DE BOMBA DE AGUA	PUMP COVER	COPERCHIO CORPO ACQUA	PLAQUE POMPE À EAU
73	PAT40-02000002	663-44367-00	GOMA DEL SELLO DE AGUA	GUIDE BUSHING, WATER PIPE	PARAOLIO	JOINT CAOUTCHOUC
74	PAF60-02000007	6C5-44361-00	TUBO DE AGUA	WATER TUBE	TUBO DELL'ACQUA	DURITE D'EAU

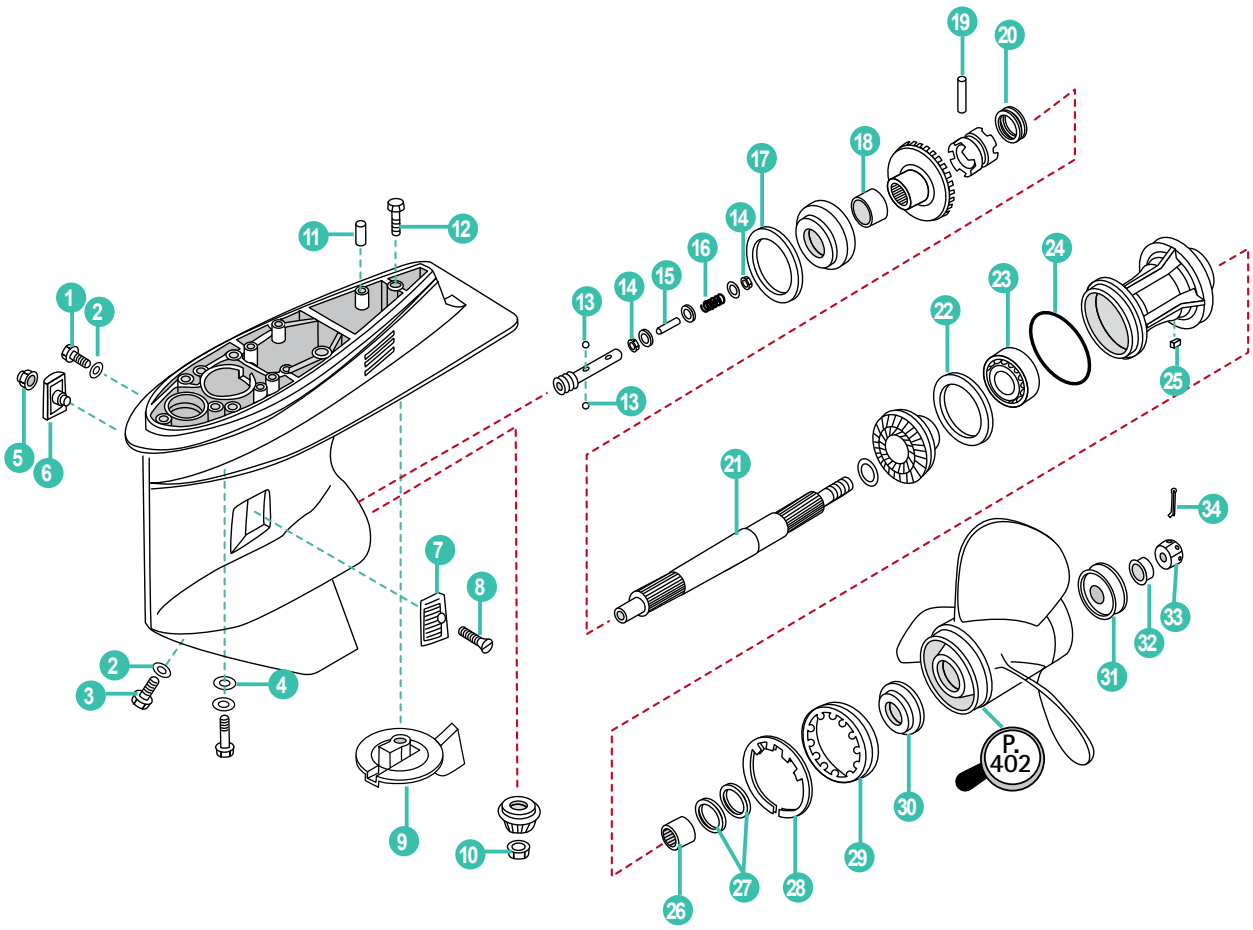



REF	OEM
REC6CJ-W0078-00	6CJ-W0078-00

P. 151



REF
REC80W90U3
REC80W90U6
RECGREU1
RECGREU12

P. 43

	REF	OEM				
1	REC90340-08002	90340-08002	TORNILLO DRENAJE	BOLT, DISCHARGING OIL	VITE DRENAGGIO	BOUCHON DE VIDANGE
2	REC90430-08020	90430-08003	JUNTA	GASKET	GUARNIZIONE	JOINT
3	REC688-45341-00	688-45341-10	TORNILLO DRENAJE	BOLT, DISCHARGING OIL	VITE DRENAGGIO	BOUCHON DE VIDANGE
4	PAGB/T97.1-8	92995-10600	ARANDELA	WASHER	RONDELLA	RONDELLE
5	PAGB/T6182-M5	90185-05002	TUERCA	LOCK NUT	DADO	ÉCROU
6	REC6H1-45215-00	6H1-45215-00	CUBIERTA ENTRADA AGUA	WATER INLET "B"	COPERCHIO ACQUA	GRILLE D'ENTREE D'EAU B
7	REC6H1-45214-00	6H1-45214-00	CUBIERTA ENTRADA AGUA	WATER INLET "A"	COPERCHIO ACQUA	GRILLE D'ENTREE D'EAU A
8	REC90151-05M00	90152-05000	TORNILLO	SCREW	VITE	VIS
9	CM67F-45371-00A	67F-45371-00	ÁNODO	ANODE	ANODO	ANODE
10	REC90170-16M01	90170-16M01	TUERCA	LOCK NUT	DADO	ÉCROU
11	REC93606-12019	93606-12019	PASADOR	PIN	SPINOTTO	LEVIER
12	PAT85-00000012	90105-16M67	PERNO	STUD	BULLONE	BOULON
13	REC93503-16003	93503-16003	ESFERA	BALL	SFERA	BILLE
14	REC90183-02M03	90183-02M03	TUERCA	LOCK NUT	DADO	ÉCROU
15	REC6H1-45668-00	6H1-45668-00	EJE DEL ÉMBOLO	FREE SHAFT	BULLONE	ARBRE
16	REC90501-12M48	90501-12M48	MUELLE	SPRING	MOLLA	RESSORT
17	PAT85-040000004-B	688-45567-01	GRUESO 0.10 mm	SHIM 0.10 mm	SPESSORE 0.10 mm	CALE 0.10 mm
18	REC93317-322V0	93317-322V0	COJINETE	BEARING	CUSCINETTO	PALIER
19	REC90250-07M02	90250-07M02	PASADOR	PIN	SPINOTTO	LEVIER
20	REC688-45633-00	688-45633-00	ANILLO DEL PASADOR	ANNULAR SPRING, CLUTCH	PARAOLIO	RESSORT
21	REC67F-45611-01	67F-45611-01	EJE HÉLICE	PROPELLER SHAFT	ASSE ELICA	ARBRE D'HELICE
22	REC67F-45576-00	67F-45576-00	ARANDELA	WASHER	RONDELLA	RONDELLE
23	REC93306-207U0	93306-207U0	COJINETE	BEARING	CUSCINETTO	PALIER
24	REC93210-86M39	93210-86M39	TÓRICA	O-RING	O-RING	JOINT TORIQUE
25	REC90282-04010	90282-04010	CHAVETA RECTA	KEY	CHIAVETTA	CLAVETTE
26	REC93317-325U0	93317-325U0	COJINETE	BEARING	CUSCINETTO	PALIER
27	REC93101-25M03	93101-25M03	RETÉN DE ACEITE	OIL SEAL	PARAOLIO	JOINT SPI
28	REC688-45383-01	688-45383-02	ARANDELA	WASHER	RONDELLA	RONDELLE
29	REC688-45384-00	688-45384-02	TUERCA	NUT	DADO	ÉCROU
30	REC688-45987-00	688-45987-01	ESPACIADOR	SPACER	DISTANZIALE	ENTRETOISE
31	REC67F-45997-00	67F-45997-00	ESPACIADOR	SPACER	DISTANZIALE	ENTRETOISE
32	REC90389-25M00	90389-25M00	CASQUILLO HÉLICE	WASHER	GHIERA ELICA	RONDELLE D'HELICE
33	REC90171-16011	90171-16011	TUERCA	LOCK NUT	DADO	ÉCROU
34	REC91490-30025	91490-30025	PASADOR	PIN	SPINOTTO	CLAVETTE

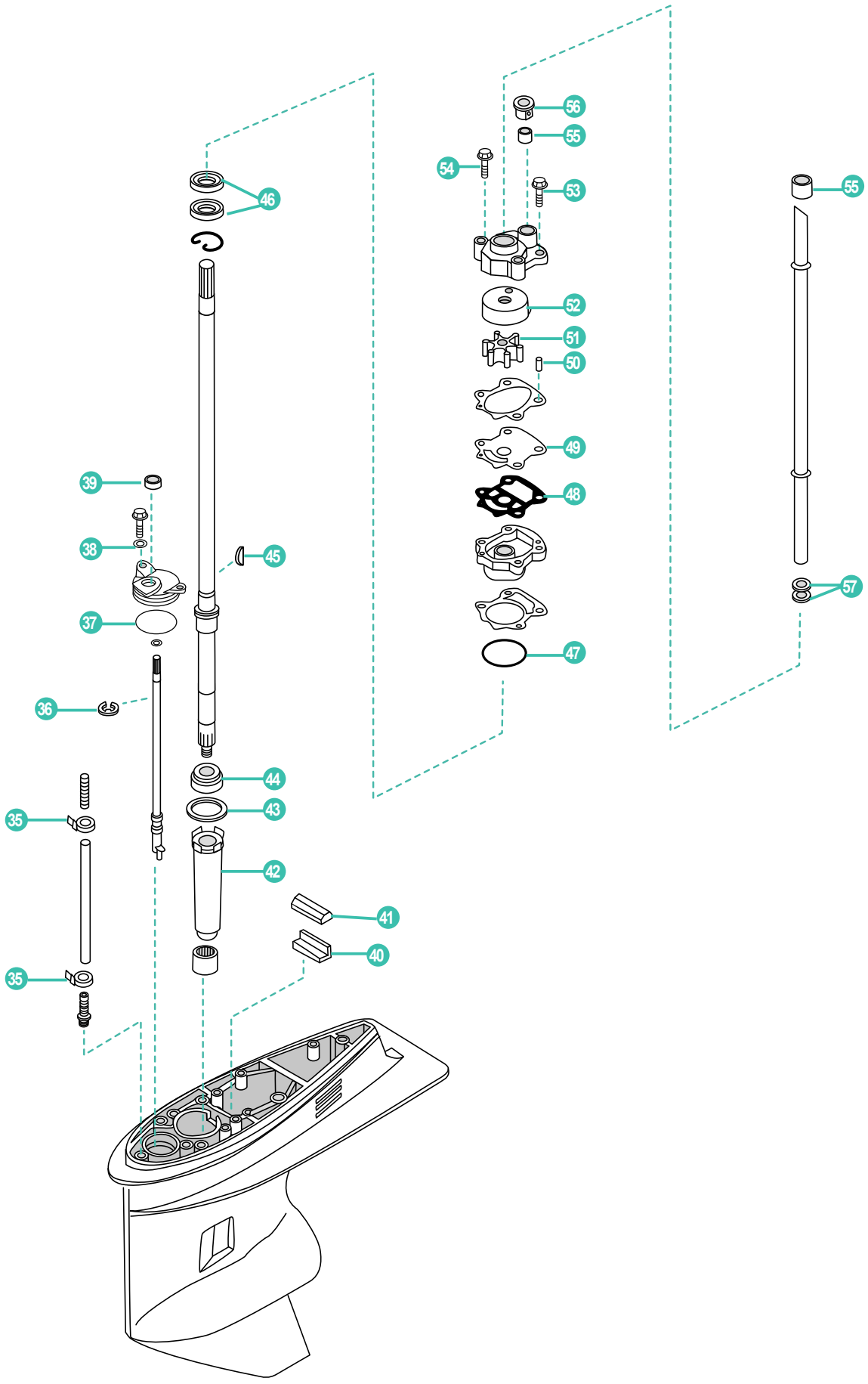
56
55
54
53
55
46
52
51
50
49
48
39
38
45
37
47
57
36
44
43
35
42
41
40
35

	REF	OEM				
35	PAHT-2.5X60	90465-11M10	BRIDA	CLAMP	FLANGIA	COLLIER
36	REC99001-08600-00	99001-08600	ARANDELA	WASHER	RONDELLA	RONDELLE
37	REC93210-49046	93210-49046	TÓRICA	O-RING	O-RING	JOINT TORIQUE
38	PAGB/T97.1-6	92995-06600	ARANDELA	WASHER	RONDELLA	RONDELLE
39	REC93106-09014	93106-09014	RETÉN DE ACEITE	OIL SEAL	PARAOLIO	JOINT SPI
40	REC663-45376-00	663-45376-00-94	GUÍA SELLO DE GOMA	GUIDE RUB. SEAL	GUIDA PARAOLIO	GUIDE
41	REC688-45375-00	63D-45375-00	RETEN DAMPER	DAMPER WASHER	PARAOLIO DAMPER	JOINT SILENT BLOC
42	REC688-45536-01	688-45536-01	CAMISA EJE	SLEEVE, DRIVE	TUBO GUIDA	RONDELLE
43	PAT85-040000003-B	688-45587-01	GRUESO 0.10 mm	SHIM 0.10 mm	SPESSORE 0.10 mm	CALE 0.10 mm
44	REC93332-000U3	93332-000U3	COJINETE	BEARING	CUSCINETTO	ROULEMENT
45	REC90280-03M03	90280-03M03	CUÑA	KEY WOODRUFF	CHIAVETTA	CLAVETTE
46	REC93101-23070	93101-23070	RETÉN DE ACEITE	OIL SEAL	PARAOLIO	JOINT SPI
47	REC93210-46044	93210-46044	TÓRICA	O-RING	O-RING	JOINT TORIQUE
48	REC6CJ-44324-00	6CJ-44324-00	JUNTA	GASKET	GUARNIZIONE	JOINT
49	REC6CJ-44323-00	6CJ-44323-00	PLACA EXTERIOR	OUTER PLATE, CARTRIDGE	COPERCHIO POMPA D'ACQUA	PLAQUE DE POMPE À EAU
50	PAF15-00000013	93604-10M03	PASADOR	PIN	SPINOTTO	PIN
51	REC6H3-44352-00	6H3-44352-00	TURBINA	IMPELLER	GIRANTE	TURBINE
52	REC63D-44322-00	63D-44322-00	TAPA, BOMBA AGUA	COVER, INNER WATER PUMP	COPERCHIO, POMPA ACQUA	INSERT DE POMPE A EAU
53	REC90119-08M14	90119-08M14	TORNILLO CON ARANDELA	SCREW WITH WASHER	VITE CON RONDELLA	VIS AVEC RONDELLE
54	REC90119-08M33	90119-08M33	TORNILLO CON ARANDELA	SCREW WITH WASHER	VITE CON RONDELLA	VIS AVEC RONDELLE
55	REC663-44366-00	663-44366-00	GOMA DEL SELLO DE AGUA	DAMPER, WATER SEAL	GHIERA	JOINT DE TUBE D'EAU
56	REC63D-44312-00	63D-44312-00	CUBIERTA CAJA DE BOMBA DE AGUA	PUMP COVER	COPERCHIO CORPO ACQUA	PLAQUE POMPE À EAU
57	PAT40-02000002	663-44367-00	GOMA DEL SELLO DE AGUA	GUIDE BUSHING, WATER PIPE	PARAOLIO	JOINT CAOUTCHOUC

4T STROKES F80A/B • F100A/D

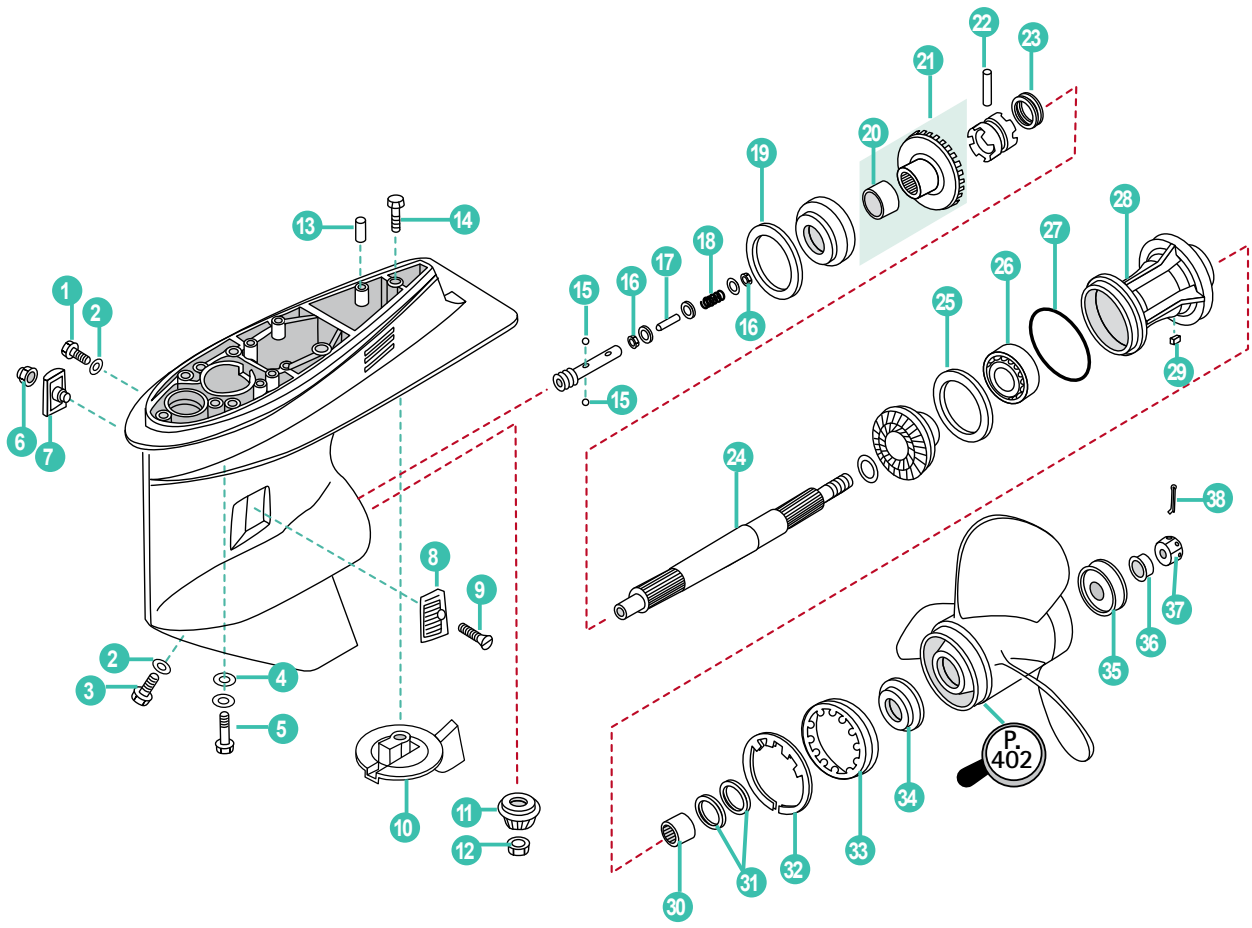



REF	OEM
REC67F-W0001-20	67F-W0001-20

P. 145



REF	OEM
REC67F-W0078-00	67F-W0078-00

P. 152



REF
REC80W90U3
REC80W90U6
RECGREU1
RECGREU12

P. 43

	REF	OEM				
1	REC90340-08002	90340-08002	TORNILLO DRENAJE	BOLT, DISCHARGING OIL	VITE DRENAGGIO	BOUCHON DE VIDANGE
2	REC90430-08020	90430-08003	JUNTA	GASKET	GUARNIZIONE	JOINT
3	REC688-45341-00	688-45341-10	TORNILLO DRENAJE	BOLT, DISCHARGING OIL	VITE DRENAGGIO	BOUCHON DE VIDANGE
4	PAGB/T97.1-8	92995-10600	ARANDELA	WASHER	RONDELLA	RONDELLE
5	REC97075-10040	97075-10040	PERNO	STUD	BULLONE	BOULON
6	PAGB/T6182-M5	90185-05002	TUERCA	LOCK NUT	DADO	ÉCROU
7	REC6H1-45215-00	6H1-45215-00	CUBIERTA ENTRADA AGUA	WATER INLET "B"	COPERCHIO ACQUA	GRILLE D'ENTREE D'EAU B
8	REC6H1-45214-00	6H1-45214-00	CUBIERTA ENTRADA AGUA	WATER INLET "A"	COPERCHIO ACQUA	GRILLE D'ENTREE D'EAU A
9	REC90151-05M00	90152-05000	TORNILLO	SCREW	VITE	VIS
10	CM67F-45371-00A	67F-45371-00	ÁNODO	ANODE	ANODO	ANODE
11	REC6D9-45551-00	6D9-45551-00	PIÑON ATAQUE	GEAR	PIGNONE	PIGNON D'ATTAQUE
12	REC90170-16M01	90170-16M01	TUERCA	LOCK NUT	DADO	ÉCROU
13	REC93606-12019	93606-12019	PASADOR	PIN	SPINOTTO	PIN
14	PAT85-00000012	90105-16M67	PERNO	STUD	BULLONE	BOULON
15	REC93503-16003	93503-16003	ESFERA	BALL	SFERA	BILLE
16	REC90183-02M03	90183-02M03	TUERCA	LOCK NUT	DADO	ÉCROU
17	REC6H1-45668-00	6H1-45668-00	EJE DEL ÉMBOLO	FREE SHAFT	BULLONE	ARBRE
18	REC90501-12M48	90501-12M48	MUELLE	SPRING	MOLLA	RESSORT
19	PAT85-040000004-B	688-45567-01	GRUESO 0.10 mm	SHIM 0.10 mm	SPESSORE 0.10 mm	CALE 0.10 mm
20	REC93317-322V0	93317-322V0	COJINETE	BEARING	CUSCINETTO	ROULEMENT
21	REC67F-45560-00	67F-45560-00	PIÑON MARCHA AVANTE	GEAR FORWARD	PIGNONE MARCIA AVANTI	PIGNON MARCHE AV
22	REC90250-07M02	90250-07M02	PASADOR	PIN	SPINOTTO	PIN
23	REC688-45633-00	688-45633-00	ANILLO DEL PASADOR	ANNULAR SPRING, CLUTCH	PARAOLIO	RESSORT
24	REC67F-45611-01	67F-45611-01	EJE HÉLICE	PROPELLER SHAFT	ASSE ELICA	ARBRE D'HELICE
25	REC67F-45576-00	67F-45576-00	ARANDELA	WASHER	RONDELLA	RONDELLE
26	REC93306-207U0	93306-207U0	COJINETE	BEARING	CUSCINETTO	ROULEMENT
27	REC93210-86M39	93210-86M39	TÓRICA	O-RING	O-RING	JOINT TORIQUE
28	REC67F-45331-00-CA	67F-45331-00-94	DIÁBOLO	BEARING	DIAVOLO	DIABOLO
29	REC90282-04010	90282-04010	CHAVETA RECTA	KEY	CHIAVETTA	CHAVETTE
30	REC93317-325U0	93317-325U0	COJINETE	BEARING	CUSCINETTO	PALIER
31	REC93101-25M03	93101-25M03	RETÉN DE ACEITE	OIL SEAL	PARAOLIO	JOINT SPI
32	REC688-45383-01	688-45383-02	ARANDELA	WASHER	RONDELLA	RONDELLE
33	REC688-45384-00	688-45384-02	TUERCA	NUT	DADO	ÉCROU
34	REC688-45987-00	688-45987-01	ESPACIADOR	SPACER	DISTANZIALE	ENTRETOISE
35	REC67F-45997-00	67F-45997-00	ESPACIADOR	SPACER	DISTANZIALE	ENTRETOISE
36	REC90389-25M00	90389-25M00	CASQUILLO HÉLICE	WASHER	GHIERA ELICA	RONDELLE D'HELICE
37	REC90171-16011	90171-16011	TUERCA	LOCK NUT	DADO	ÉCROU
38	REC91490-40030	91490-40025	PASADOR	PIN	SPINOTTO	CLAVETTE

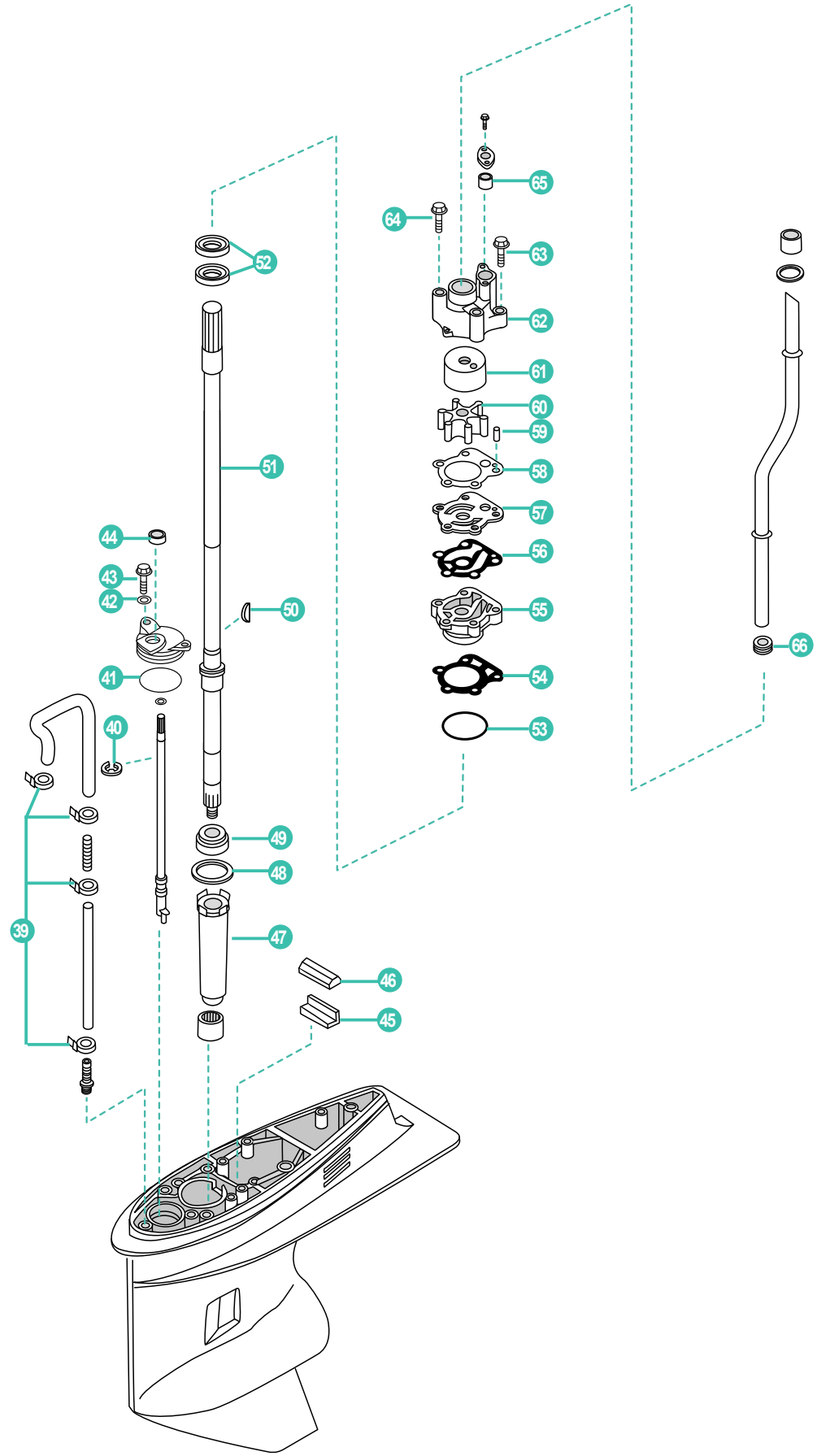
65
64
63
52
62
61
60
59
58
51
57
44
56
43
42
50
55
41
54
40
53
49
48
39
47
46
45
66

	REF	OEM				
39	PAHT-2.5X60	90465-11M10	BRIDA	CLAMP	FLANGIA	COLLIER
40	REC99001-08600-00	99001-08600	ARANDELA	WASHER	RONDELLA	RONDELLE
41	REC93210-49046	93210-49046	TÓRICA	O-RING	O-RING	JOINT TORIQUE
42	PAGB/T97.1-6	92995-06600	ARANDELA	WASHER	RONDELLA	RONDELLE
43	PAGB/T5783-M6X16	97095-06016	PERNO HEXAGONAL	BOLT	BULLONE	BOULON HEXAGONAL
44	REC93106-09014	93106-09014	RETÉN DE ACEITE	OIL SEAL	PARAOLIO	JOINT SPI
45	REC663-45376-00	663-45376-00-94	GUÍA SELLO DE GOMA	GUIDE RUB. SEAL	GUIDA PARAOLIO	GUIDE
46	REC688-45375-00	63D-45375-00	RETEN DAMPER	DAMPER WASHER	PARAOLIO DAMPER	JOINT SILENT BLOC
47	REC688-45536-01	688-45536-01	CAMISA EJE	SLEEVE, DRIVE	TUBO GUIDA	RONDELLE
48	PAT85-040000003-B	688-45587-01	GRUESO 0.10 mm	SHIM 0.10 mm	SPESSORE 0.10 mm	CALE 0.10 mm
49	REC93332-000U3	93332-000U3	COJINETE	BEARING	CUSCINETTO	ROULEMENT
50	REC90280-04M04	90280-04M04	CUÑA	KEY WOODRUFF	CHIAVETTA	CLAVETTE
51	REC67F-45501-10	67F-45501-10	EJE VERTICAL L (21,1")	DRIVE SHAFT L	ALBERO TRANSON	ARBRE VERTICAL L (21,1)"
52	REC93101-25M03	93101-25M03	RETÉN DE ACEITE	OIL SEAL	PARAOLIO	JOINT SPI
53	REC93210-46044	93210-46044	TÓRICA	O-RING	O-RING	JOINT TORIQUE
54	REC688-44316-00	688-44316-00	JUNTA	GASKET	GUARNIZIONE	JOINT
55	REC688-44341-01	6D8-44341-01	CUERPO RETENES BOMBA DE AGUA	HOUSING WATER PUMP	CORPO POMPA	BASE DE POMPE À EAU
56	REC688-44324-00	688-44324-A0	JUNTA	GASKET	GUARNIZIONE	JOINT
57	REC67F-44323-00	67F-44323-00	PLACA EXTERIOR	WEAR PLATE	COPERCHIO	PLAQUE DE POMPE À EAU
58	REC688-44315-00	688-44315-A0	JUNTA	GASKET	GUARNIZIONE	JOINT
59	PAF25-04000007	93604-10M03	PASADOR	PIN	SPINOTTO	LEVIER
60	REC67F-44352-00	67F-44352-00	TURBINA	IMPELLER	GIRANTE	TURBINE
61	REC67F-44322-00	67F-44322-00	TAPA, BOMBA AGUA	COVER, INNER WATER PUMP	COPERCHIO, POMPE ACQUA	INSERT DE POMPE A EAU
62	REC67F-44311-01	67F-44311-00	CUERPO BOMBA AGUA	HOUSING, WATER PUMP	CORPO POMPA	CORPS DE POMPE A EAU
63	REC90119-08M13	90119-08M13	TORNILLO CON ARANDELA	SCREW WITH WASHER	VITE CON RONDELLA	VIS AVEC RONDELLE
64	REC90119-08M87	90119-08M87	TORNILLO CON ARANDELA	SCREW WITH WASHER	VITE CON RONDELLA	VIS AVEC RONDELLE
65	REC663-44366-00	663-44366-00	RETEN TUBO AGUA	DAMPER, WATER SEAL	GHIERA	JOINT DE TUBE D'EAU
66	PAT40-02000002	663-44367-00	GOMA DEL SELLO DE AGUA	GUIDE BUSHING, WATER PIPE	PARAOLIO	MAUCHON CAOUTCHOUC DE PIPE D'EAU

4T STROKES F115A/T/B • F130A

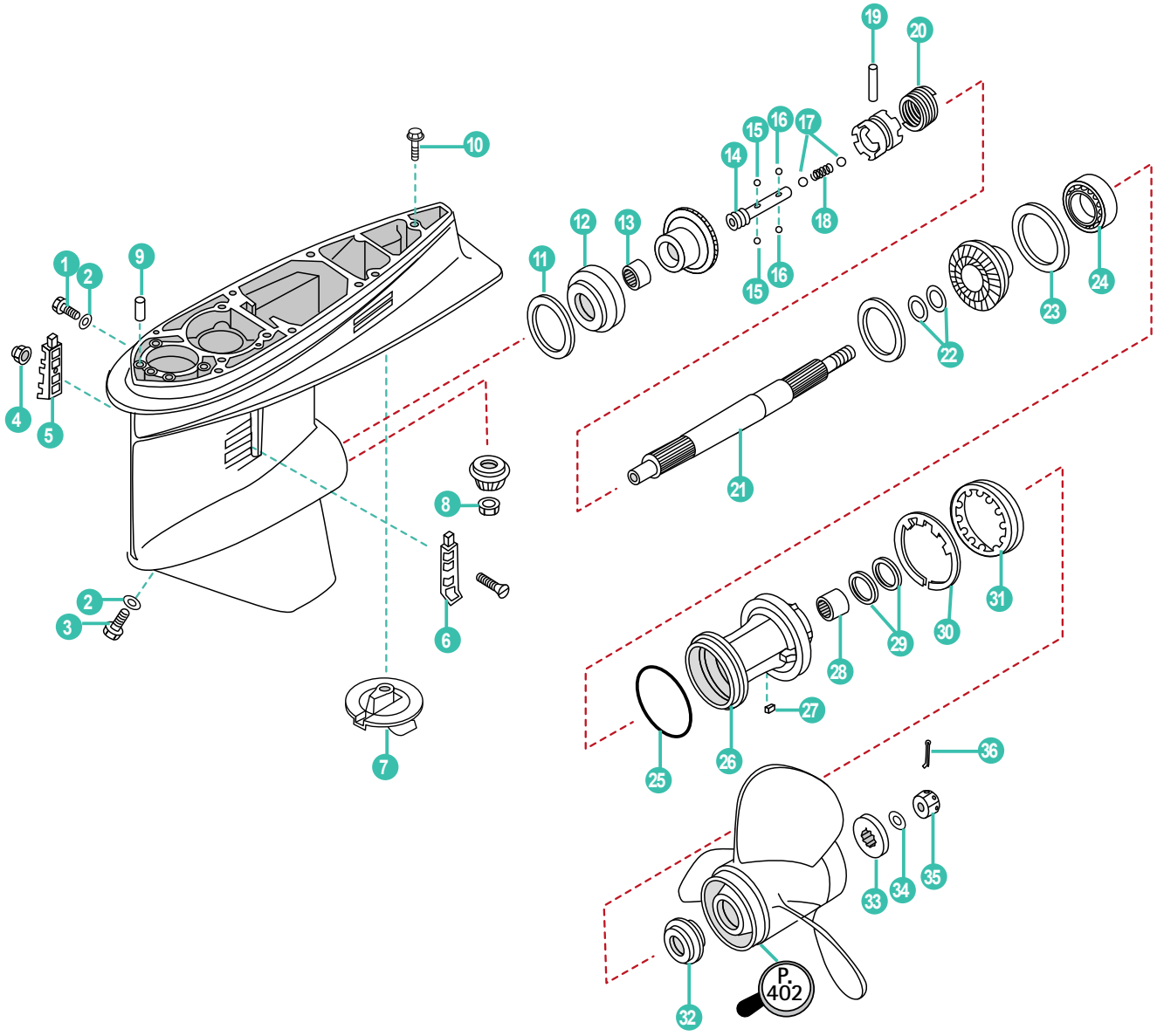

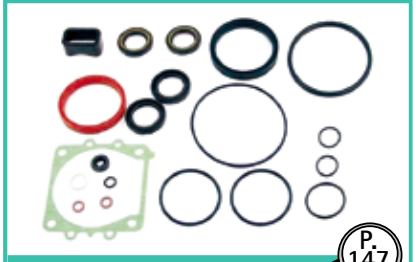

REF	OEM
REC68V-W0001-20	68V-W0001-20

P. 147

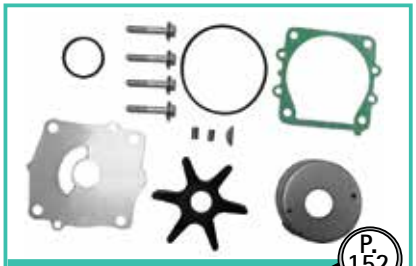

REF	OEM
REC68V-W0078-00	68V-W0078-00

P. 152



REF
REC80W90U3
REC80W90U6
RECGREU1
RECGREU12

P. 43

	REF	OEM				
1	REC90340-08002	90340-08002	TORNILLO DRENAJE	BOLT, DISCHARGING OIL	VITE DRENAGGIO	BOUCHON DE VIDANGE
2	REC90430-08020	90430-08003	JUNTA	GASKET	GUARNIZIONE	JOINT
3	REC688-45341-00	688-45341-10	TORNILLO DRENAJE	BOLT, DISCHARGING OIL	VITE DRENAGGIO	BOUCHON DE VIDANGE
4	PAGB/T6182-M5	90185-05002	TUERCA	LOCK NUT	DADO	ÉCROU
5	REC688-45215-02	688-45215-02	CUBIERTA ENTRADA AGUA	WATER INLET "B"	COPERCHIO ACQUA	GRILLE D'ENTREE D' EAU B
6	REC688-45214-02	688-45214-02	CUBIERTA ENTRADA AGUA	WATER INLET "A"	COPERCHIO ACQUA	GRILLE D'ENTREE D' EAU A
7	CM6E5-45371-01A	6E5-45371-00	ÁNODO	ANODE	ANODO	ANODE
8	REC90170-16M01	90170-16M01	TUERCA	LOCK NUT	DADO	ÉCROU
9	REC93608-12M05	93608-12M05	PASADOR	PIN	SPINOTTO	PIN
10	PAT85-00000012	90105-10M00	TORNILLO	SCREW	VITE	VIS
11	REC6E5-45567-01	6E5-45567-01	KIT GRUESOS 0.12 - 0.50 mm	SHIM SET 0.12 - 0.50 mm	KIT SPESSORI 0.12 - 0.50 mm	KIT CALES 0.12 - 0.50 mm
12	REC93332-000U7	93332-000U7	COJINETE	BEARING	CUSCINETTO	ROULEMENT
13	REC93315-425U7	93315-425U7	COJINETE	BEARING	CUSCINETTO	ROULEMENT
14	REC6E5-45634-01	6E5-45634-01	PASADOR DESPLAZABLE	SLIDE SHIFT	SPINOTTO SCORREVOLE	PIN REGLABLE
15	REC93507-32031	93507-32009	ESFERA	BALL	SFERA	BILLE
16	REC93503-16003	93503-16003	ESFERA	BALL	SFERA	BILLE
17	REC93511-32027	93511-32027	ESFERA	BALL	SFERA	BILLE
18	REC90501-16M37	90501-16M37	MUELLE	SPRING	MOLLA	RESSORT
19	REC90250-08M07	90250-08M07	PASADOR	PIN	SPINOTTO	LEVIER
20	REC6E5-45633-01	6E5-45633-01	ANILLO DEL PASADOR	ANNULAR SPRING, CLUTCH	ANELLO SELETTORE	RESSORT
21	REC6E5-45611-00	6E5-45611-00	EJE HÉLICE	PROPELLER SHAFT	ASSE ELICA	ARBRE D'HELICE
22	REC90201-30M92	90201-30M92	ARANDELA	WASHER	RONDELLA	RONDELLE
23	REC6E5-45576-00	6E5-45576-00	ARANDELA	WASHER	RONDELLA	RONDELLE
24	REC93306-208U0	93306-208U0	COJINETE	BEARING	CUSCINETTO	ROULEMENT
25	REC93210-86M39	93210-86M39	TÓRICA	O-RING	O-RING	JOINT TORIQUE
26	REC6E5-45332-00-94	6E5-45332-00-CA	DIÁBOLO	GEAR HOUSING	DIAVOLO	DIABOLO
27	REC90282-04010	90282-04010	CHAVETA RECTA	KEY	CHIAVETTA	CHAVETTE
28	REC93315-430U8	93315-430U8	COJINETE	BEARING	CUSCINETTO	ROULEMENT
29	REC93101-30M17	93101-30M17	RETÉN DE ACEITE	OIL SEAL	PARAOLIO	JOINT SPI
30	REC688-45383-01	688-45383-02	ARANDELA	WASHER	RONDELLA	RONDELLE
31	REC688-45384-00	688-45384-02	TUERCA	NUT	DADO	ÉCROU
32	REC6E5-45987-00	63P-45987-00	ESPACIADOR	SPACER	DISTANZIALE	ENTRETOISE
33	REC688-45997-00	688-45997-01	ESPACIADOR	SPACER	DISTANZIALE	ENTRETOISE
34	REC92990-18200	92990-18200	ARANDELA	WASHER	RONDELLA	RONDELLE
35	REC90171-18M04	90171-18M04	TUERCA	LOCK NUT	DADO	ÉCROU
36	REC91490-40030	91490-40030	PASADOR	PIN	SPINOTTO	CLAVETTE

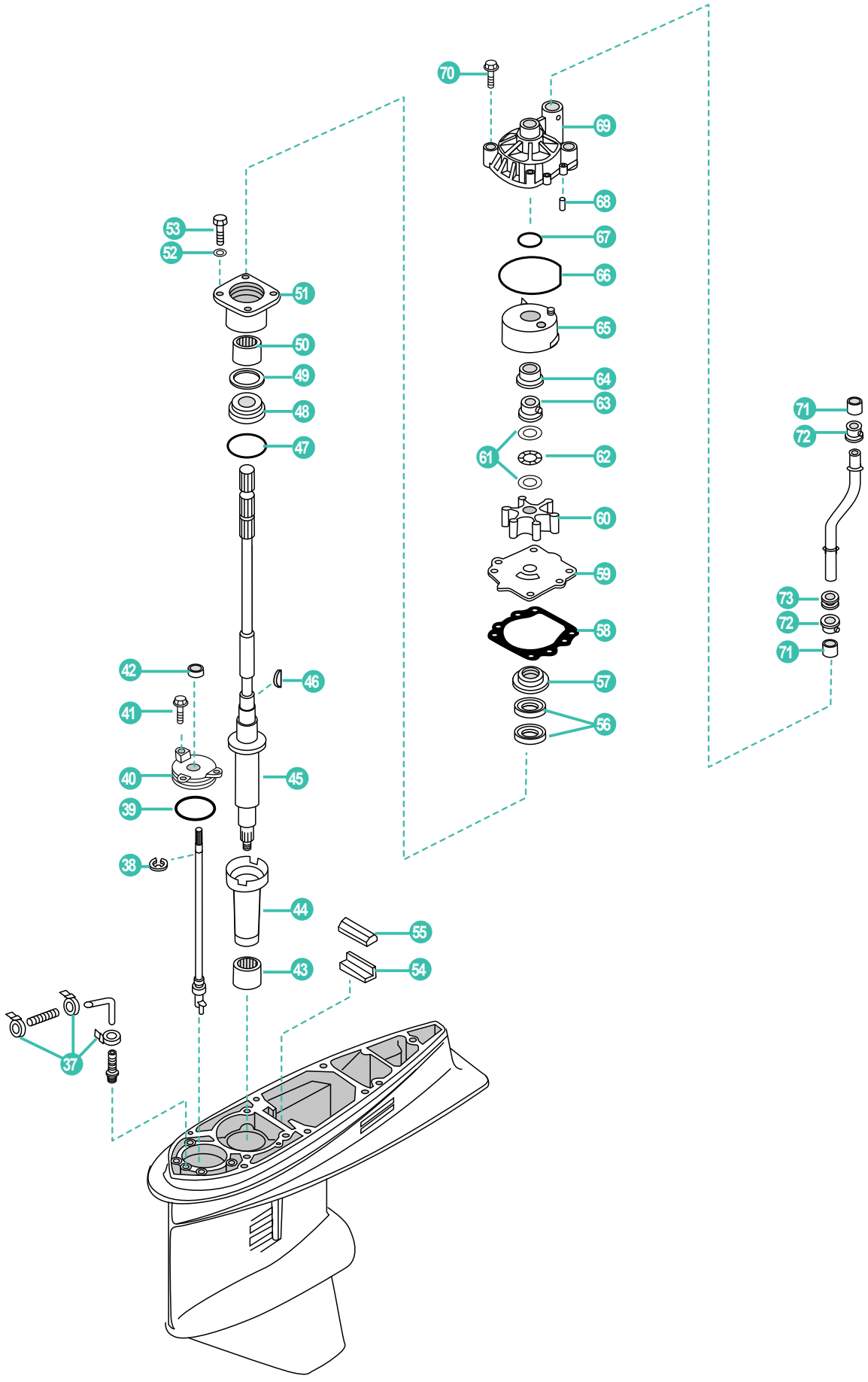
70
69
68
67
66
65
64
63
61
62
60
59
58
57
56
53
52
51
50
49
48
47
42
41
40
39
38
46
45
44
43
55
54
37
71
72
73
72
71

	REF	OEM				
37	PAHT-2.5X60	90465-11M10	BRIDA	CLAMP	FLANGIA	COLLIER
38	REC99001-08600-00	99001-08600	ARANDELA	WASHER	RONDELLA	RONDELLE
39	REC93210-58677	93210-58144	TÓRICA	O-RING	O-RING	JOINT TORIQUE
40	REC6E5-45321-00	6E5-45321-00	TAPA CAMBIO	PLATE	COPERCHIO CAMBIO	COUVERCLE
41	REC90119-06M10	90119-06M10	TORNILLO CON ARANDELA	SCREW WITH WASHER	VITE CON RONDELLA	VIS AVEC RONDELLE
42	REC93106-09014	93106-09014	RETÉN DE ACEITE	OIL SEAL	PARAOLIO	JOINT SPI
43	REC93315-628U9	93315-628U9	COJINETE	BEARING	CUSCINETTO	ROULEMENT
44	REC6E5-45536-00	6E5-45536-00	CAMISA EJE DE MANDO	SLEEVE	CAMICIA	BAGUE
45	REC68V-45501-10	68V-45501-10	EJE TRANSMISION L 20.3"	DRIVE SHAFT	ASSE TRASMISSIONE L 20,3"	ARBRE DE TRANSMISSION 20,3"
46	REC90280-04M05	90280-04M05	CUÑA	KEY WOODRUFF	CHIAVETTA	CLAVETTE
47	REC93210-54534	93210-55M14	TÓRICA	O-RING	O-RING	JOINT TORIQUE
48	REC93341-930V2	93341-930V2	COJINETE	BEARING	CUSCINETTO	ROULEMENT
49	REC6E5-45587-01	6E5-45587-01	KIT GRUESOS 0.12 - 0.50 mm	SHIM SET 0.12 - 0.50 mm	KIT SPESSORI 0.12 - 0.50 mm	KIT CALES 0.12 - 50 mm
50	REC93317-330U2	93317-330U2	COJINETE	BEARING	CUSCINETTO	ROULEMENT
51	REC6E5-45331-00-94	6E5-45331-00-9S	DIÁBOLO	GEAR HOUSING	DIAVOLO	DIABOLO
52	PAGB/T97.1-8	92995-08600	ARANDELA	WASHER	RONDELLA	RONDELLE
53	PAGB/T5783-M8X25	97095-08025	PERNO	BOLT	VOTE	BOULON
54	REC663-45376-00	663-45376-00	GUÍA SELLO DE GOMA	GUIDE RUB. SEAL	GUIDA PARAOLIO	GUIDE
55	REC688-45375-00	63D-45375-00	RETEN DAMPER	DAMPER WASHER	PARAOLIO DAMPER	JOINT SILENT BLOC
56	REC93101-28M16	93101-28M16	RETÉN DE ACEITE	OIL SEAL	PARAOLIO	JOINT SPI
57	REC6E5-45344-00	6E5-45344-00	TAPA RETEN	RETAINER	COPERCHIO PARAOLIO	RETENUE
58	REC6E5-44315-A0	6E5-44315-A0	JUNTA	GASKET	GUARNIZIONE	JOINT
59	REC68V-44323-00	6EK-44323-00	TAPA BOMBA	OUTER PLATE	COPERCHIO POMPA	PLAQUE DE POMPE À EAU
60	REC6E5-44352-01	6E5-44352-01	TURBINA	IMPELLER	GIRANTE	TURBINE
61	REC90201-22M01	90201-22M01	ARANDELA	WASHER	RONDELLA	RONDELLE
62	REC90206-22M19	90206-22M19	ARANDELA ONDULADA	WAVE WASHER	RONDELLA ONDULATA	RONDELLE
63	REC61A-45538-00	61A-45538-00	ESPACIADOR	SPACER	SPESSORE	ENTRETOISE
64	REC61A-45527-00	61A-45527-00	CASQUILLO CUERPO BOMBA	COLLAR	BOCCOLA CORPO POMPA	BAGUE POMPE À EAU
65	REC61A-44322-02	61A-44322-02	TAPA, BOMBA AGUA	COVER, INNER WATER PUMP	COPERCHIO, POMPE D'EAU	INSERT DE POMPE A EAU
66	REC93210-86M38	93210-86M38	TÓRICA	O-RING	O-RING	JOINT TORIQUE
67	REC93210-37160	93210-37160	TÓRICA	O-RING	O-RING	JOINT TORIQUE
68	REC93606-12019	93606-12019	PASADOR	PIN	SPINOTTO	LEVIER
69	REC61A-44311-00	61A-44311-01	CUERPO BOMBA AGUA	HOUSING, WATER PUMP	CORPO POMPA	CORPS DE POMPE A EAU
70	REC90119-08M14	90119-08M14	TORNILLO CON ARANDELA	SCREW WITH WASHER	VITE CON RONDELLA	VIS AVEC RONDELLE
71	REC6E5-44365-00	6E5-44365-00	GOMA DEL SELLO DE AGUA	DAMPER WATER TUBE	GUARNIZIONE	BAGUE DE TUBE D'EAU
72	REC6E5-44312-00	6E5-44312-00	CUBIERTA CAJA DE BOMBA DE AGUA	WATER PUMP COVER	COPERCHIO POMPA ACQUA	GUIDE
73	REC6E5-44366-00	6E5-44366-00	FLECTOR	DAMPER WATER SEAL	GUARNIZIONE	JOINT

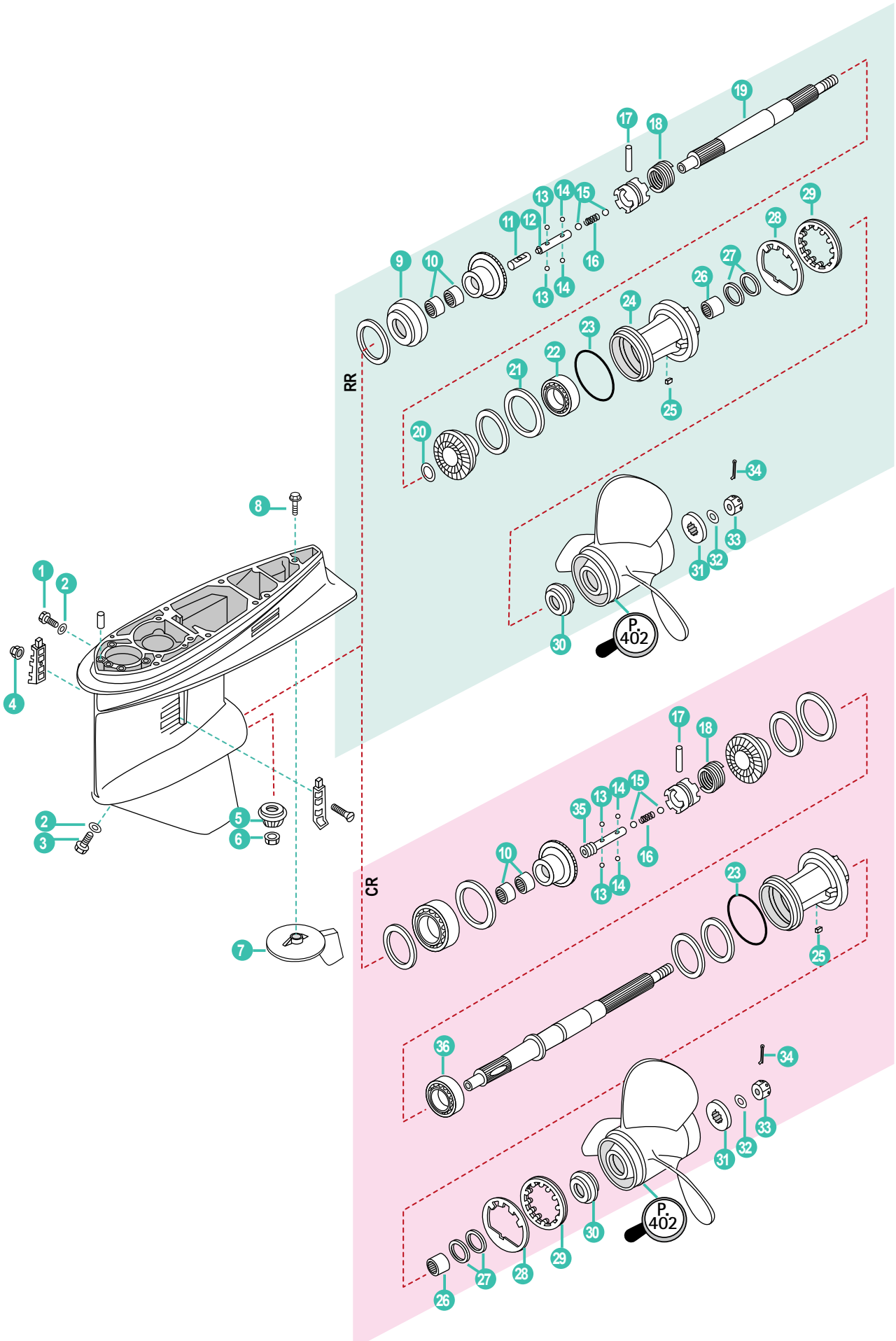
RR
CR
P. 402
P. 402

	REF	OEM				
	REC416-B20F	63P-45300-02-8D	CONJUNTO INFERIOR RR (L) SÓLO PARA F150	COMPLETE GEARCASE V6 (L) ONLY F150	PIEDE COMPLETO (L) SOLO F150	EMBASE COMPLETE (L) POUR F150
	REC416-B25F	63P-45300-12-8D	CONJUNTO INFERIOR RR (X) SÓLO PARA F150	COMPLETE GEARCASE V6 (X) ONLY F150	PIEDE COMPLETO V6 (X) SOLO F150	EMBASE COMPLETE V6 (X) POUR F150
	REC418-B25F	64P-45300-12-8D	CONJUNTO INFERIOR CR (X) SÓLO PARA F150	COMPLETE GEARCASE V6 ONLY F150	PIEDE COMPLETE CR (X) FOLO F150	EMBASE COMPLETE CONTRE ROTATION (X) POUR F150
1	REC90340-08002	90304-08002	TORNILLO DRENAJE	BOLT, DISCHARGING OIL	VITE DRENAGGIO	BOUCHON DE VIDANGE
2	REC90430-08020	90430-08020	JUNTA	GASKET	GUARNIZIONE	JOINT
3	REC688-45341-00	688-45341-10	TORNILLO DRENAJE	BOLT, DISCHARGING OIL	VITE DRENAGGIO	BOUCHON DE VIDANGE
4	PAGB/T6182-M5	90185-05002	TUERCA	LOCK NUT	DADO	ÉCROU
5	REC63P-45551-00	63P-45551-00	PIÑON ATAQUE	GEAR	PIGNONE ATTACCO	PIGNON D'ATTAQUE
6	REC90170-16M01	90170-16M01	TUERCA	LOCK NUT	DADO	ÉCROU
7	CM6J9-45371-01A	6J9-45371-01	ÁNODO	ANODE	ANODO	ANODE
8	PAT85-00000012	90105-10M00	TORNILLO	SCREW	VITE	VIS
9	REC93332-000V3	93332-000V3	COJINETE	BEARING	CUSCINETTO	ROULEMENT
10	REC93315-425V3	93315-425V3	COJINETE	BEARING	CUSCINETTO	ROULEMENT
11	REC6E5-45641-03	6E5-45641-03	EJE	SHAFT	ASSE	ARBRE
12	REC6E5-45634-01	6E5-45634-01	PASADOR DESPLAZABLE	SLIDE SHIFT	SPINOTTO SCORREVOLE	PIN REGLABLE
13	REC93507-32031	93507-32009	ESFERA	BALL	SFERA	BILLE
14	REC93503-16003	93503-16003	ESFERA	BALL	SFERA	BILLE
15	REC93511-32027	93511-32017	ESFERA	BALL	SFERA	BILLE
16	REC90501-16M37	90501-16M37	MUELLE	SPRING	MOLLA	RESSORT
17	REC90250-08M07	90250-08M07	PASADOR	PIN	SPINOTTO	PIN
18	REC6E5-45633-01	6E5-45633-01	ANILLO DEL PASADOR	ANNULAR SPRING, CLUTCH	ANELLO	RESSORT
19	REC6J9-45611-00	6J9-45611-01	EJE HÉLICE	PROPELLER SHAFT	ASSE ELICA	ARBRE D'HELICE
20	REC90201-30M92	90201-30M92	ARANDELA	WASHER	RONDELLA	RONDELLE
21	REC6G5-45576-10	6G5-45576-10	ARANDELA EMPUJE	WASHER, THRUST	RONDELLA DI SPINTA	RONDELLE D'APPUI
22	REC93306-209U0	93306-209U0	COJINETE	BEARING	CUSCINETTO	ROULEMENT
23	REC93210-97M55	93210-97M55	TÓRICA	O-RING	O-RING	JOINT TORIQUE
24	REC6J9-45332-00-CA	6J9-45332-00-CA	DIÁBOLO	GEAR HOUSING	DIAVOLO	DIABOLO
25	REC90282-04M00	90282-04M00	CHAVETA RECTA	KEY	CHIAVETTA	CLAVETTE
26	REC93315-43061	93315-43061	COJINETE	BEARING	CUSCINETTO	ROULEMENT
27	REC93101-30M17	93101-30M17	RETÉN DE ACEITE	OIL SEAL	PARAOLIO	JOINT SPI
28	REC6G5-45383-01	6G5-45383-01	ARANDELA	WASHER	RONDELLA	RONDELLE
29	REC6G5-45384-00	6G5-45384-00	TUERCA	NUT	DADO	ÉCROU
30	REC6E5-45987-00	63P-45987-00	ESPACIADOR	SPACER	DISTANZIALE	ENTRETOISE
31	REC688-45997-00	688-45997-01	ESPACIADOR	SPACER	DISTANZIALE	ENTRETOISE
32	REC92990-18200	92990-18200	ARANDELA	WASHER	RONDELLA	RONDELLE
33	REC90171-18M04	90171-18M04	TUERCA	LOCK NUT	DADO	ÉCROU
34	REC91490-40030	91490-40030	PASADOR	PIN	SPINOTTO	CLAVETTE
			CONTRA ROTACIÓN	COUNTER ROTATION	CONTRO ROTANTE	CONTRE
35	REC6E5-45634-01	6E5-45634-02	DESLIZADOR CAMBIO	SLIDE SHIFT	SPINOTTO SCORREVOLE	PIN REGLABLE
36	REC93332-00048	93332-00048	COJINETE	BEARING	CUSCINETTO	ROULEMENT

4T STROKES F150A/T/B/D (FL) • F175A/C • F200F/G

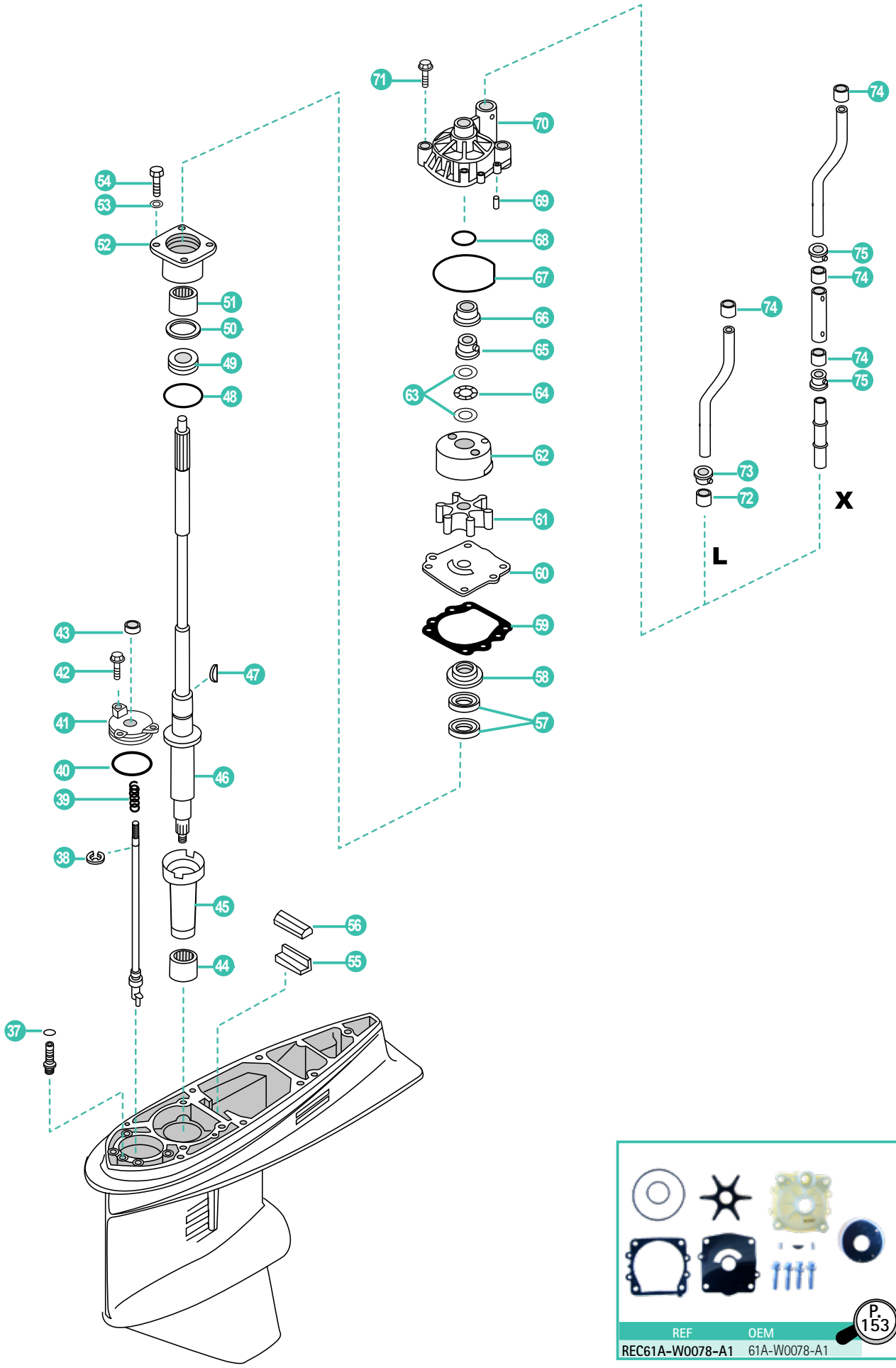

REF	OEM
REC61A-W0078-A1	61A-W0078-A1

P. 153

	REF	OEM				
37	REC93210-07540	93210-07003	TÓRICA	O-RING	O-RING	JOINT TORIQUE
38	REC99001-08600-00	99001-08600	CLIP	CLIP	CLIP	CLIP
39	REC90501-11M10-00	90501-11M10	RESORTE DE COMPRESIÓN	SPRING	MOLLA	RESSORT
40	REC93210-58677	93210-58144	TÓRICA	O-RING	O-RING	JOINT TORQUE
41	REC6E5-45321-00	6E5-45321-00	TAPA CAMBIO	PLATE	COPERCHIO CAMBIO	COUVERCLE
42	REC90119-06M10	90119-06M10	TORNILLO CON ARANDELA	SCREW WITH WASHER	VITE CON RONDELLA	VIS AVEC RONDELLE
43	REC93106-09014	93106-09014	RETÉN DE ACEITE	OIL SEAL	PARAOLIO	JOINT SPI
44	REC93311-928U5	93311-928U5	COJINETE	BEARING	CUSCINETTO	ROULEMENT
45	REC6E5-45536-00	6E5-45536-01	CAMISA EJE DE MANDO	SLEEVE	CAMICIA	BAGUE
46	REC63P-45501-00	63P-45501-00	EJE TRASMISION 20" (L)	DRIVE SHAFT 20"	ALBERO DI TRASMISSIONE 20"	ARBRE TRASMISION 20"
	REC63P-45501-10	63P-45501-10	EJE TRASMISION 25" (X)	DRIVE SHAFT 25"	ALBERO DI TRASMISSIONE 25"	ARBRE TRASMISION 25"
47	REC90280-04M05	90280-04M05	CUÑA	KEY WOODRUFF	CHIAVETTA	CLAVETTE
48	REC93210-54534	93210-55M14	TÓRICA	O-RING	O-RING	JOINT TORIQUE
49	REC93341-930V2	93341-930V2	COJINETE	BEARING	CUSCINETTO	ROULEMENT
50	REC6E5-45587-01	6E5-45587-01	KIT GRUESOS 0.10 - 0.50 mm	SHIM SET 0.10 - 0.50 mm	KIT SPESSORI 0.10 - 0.50 mm	KIT CALES 0.10- 0.50 mm
51	REC93317-330U2	93317-330U2	COJINETE	BEARING	CUSCINETTO	ROULEMENT
52	REC6E5-45331-00-94	6E5-45331-00-9S	DIÁBOLO	GEAR HOUSING	DIAVOLO	DIABOLO
53	PAGB/T97.1-8	92995-08600	ARANDELA	WASHER	RONDELLA	RONDELLE
54	PAGB/T5783-M8X25	97095-08025	PERNO	BOLT	BULLONE	BOULON
55	REC663-45376-00	663-45376-00-94	GUÍA SELLO DE GOMA	GUIDE RUB. SEAL	GUIDA PARAOLIO	GUIDE
56	REC688-45375-00	688-45375-00	RETEN DAMPER	DAMPER WASHER	PARAOLIO DAMPER	JOINT SILENT BLOC
57	REC93101-28M16	93101-28M16	RETÉN DE ACEITE	OIL SEAL	PARAOLIO	JOINT SPI
58	REC6E5-45344-00	6E5-45344-00	CUBIERTA SELLO DE ACEITE	RETAINER	COPERCHIO PARAOLIO	RETENUE
59	REC6E5-44315-A0	6E5-44315-A0	JUNTA	GASKET	GUARNIZIONE	JOINT
60	REC6G5-44323-00	6G5-44323-00	PLACA EXTERIOR DEL CARTUCHO	OUTER PLATE	COPERCHIO POMPA	PLAQUE DE POMPE À EAU
61	REC6E5-44352-01	6E5-44352-01	TURBINA	IMPELLER	GIRANTE	TURBINE
62	REC61A-44322-02	61A-44322-02	ACOPLE INOX	INSERT CARTRIDGE	ACCOPPIAMENTO INOX	INSERT DE POMPE A EAU
63	REC90201-22M01	90201-22M01	ARANDELA	WASHER	RONDELLA	RONDELLE
64	REC90206-22M19	90206-22M19	ARANDELA ONDULADA	WAVE WASHER	RONDELLA ONDULATA	RONDELLE
65	REC61A-45538-00	61A-45538-00	ESPACIADOR	SPACER	SPESSORE	ENTRETOISE
66	REC61A-45527-00	61A-45527-00	CASQUILLO CUERPO BOMBA	COLLAR	BOCCOLA CORPO POMPA	BAGUE POMPE À EAU
67	REC93210-86M38	93210-86M38	TÓRICA	O-RING	O-RING	JOINT TORIQUE
68	REC93210-37160	93210-37160	TÓRICA	O-RING	O-RING	JOINT TORIQUE
69	REC93606-12019	93606-12019	PASADOR	PIN	SPINOTTO	PIN
70	REC61A-44311-00	61A-44311-01	CUERPO BOMBA AGUA	HOUSING, WATER PUMP	CORPO POMPA	CORPS DE POMPE À EAU
71	REC90119-08M14	90119-08M14	TORNILLO CON ARANDELA	SCREW WITH WASHER	VITE CON RONDELLA	VIS AVEC RONDELLE
72	REC6E5-44365-00	6E5-44365-00	GOMA DEL SELLO DE AGUA	DAMPER WATER TUBE	GUARNIZIONE	BAGUE DE TUBE D'EAU
73	REC6E5-44312-00	6E5-44312-00	CUBIERTA CAJA DE BOMBA DE AGUA (L)	WATER PUMP COVER (L)	COPERCHIO POMPA ACQUA (L)	GUIDE DE TBE D'EAU (L)
74	REC6E5-44365-00	6E5-44365-00	GOMA TUBO AGUA	DAMPER WATER TUBE	GUARNIZIONE	BAGUE DE TUBE D'EAU
75	REC6E5-44312-00	6E5-44312-00	CUBIERTA CAJA DE BOMBA DE AGUA (X)	WATER PUMP COVER (X)	COPERCHIO POMPA ACQUA (X)	GUIDE DE TUBE D'EAU (X)



REF
REC80W90U3
REC80W90U6
RECGREU1
RECGREU12

P. 43

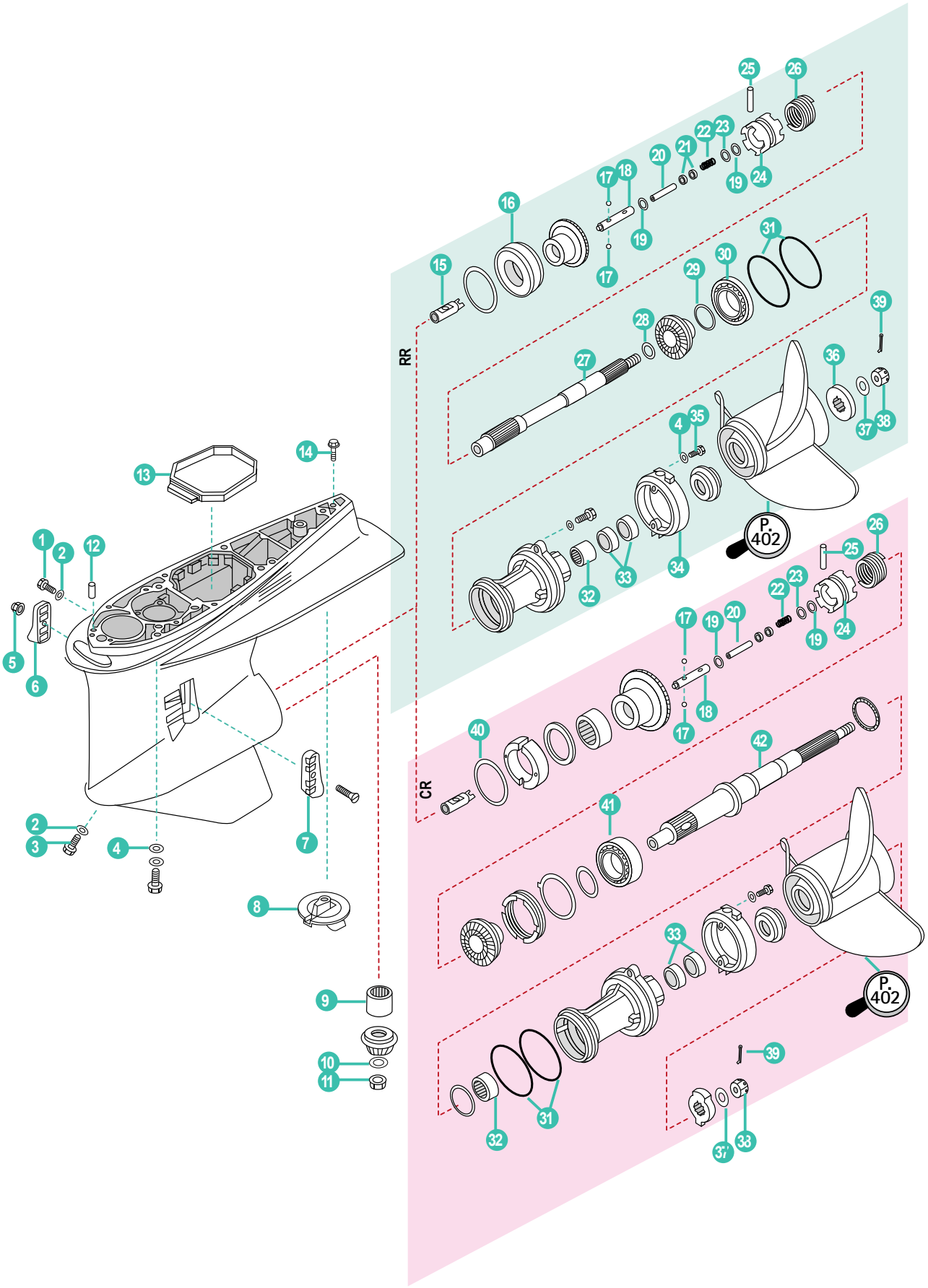
RR
CR
P. 402
P. 402

	REF	OEM				
	REC421-B25F	69J-45300-22-8D	CONJUNTO INFERIOR RR (X)	COMPLETE GEARCASE V6	PIEDE COMPLETO V6	EMBASE COMPLETE
1	REC90340-08002	90304-08002	TORNILLO DRENAJE	BOLT, DISCHARGING OIL	VITE DRENAGGIO	BOUCHON DE VIDANGE
2	REC90430-08020	90430-08020	JUNTA	GASKET	GUARNIZIONE	JOINT
3	REC688-45341-00	688-45341-10	TORNILLO DRENAJE	BOLT, DISCHARGING OIL	VITE DRENAGGIO	BOUCHON DE VIDANGE
4	PAGB/T97.1-8	92995-10600	ARANDELA	WASHER	RONDELLA	RONDELLE
5	PAGB/T6182-M5	90185-05002	TUERCA	LOCK NUT	DADO	ÉCROU
6	REC61A-45215-10	61A-45215-11	REJILLA TOMA AGUA ESTRIBOR	WATER SCREEN STARBOARD	GRIGLIA PRESA ACQUA TRIBORDO	GRILLE D'ENTREE D'EAU TRIBORD
7	REC61A-45214-10	61A-45214-11	REJILLA TOMA AGUA BABOR	WATER SCREEN PORT	GRIGLIA PRESA ACQUA BABORDO	GRILLE D'ENTREE D'EAU BABORD
8	CM61A-45371-00A	61A-45371-00	ÁNODO	ANODE	ANODO	ANODE
9	REC93311-83280	93311-83280	COJINETE	BEARING	CUSCINETTO	ROULEMENT
10	REC90201-16M00	90201-16M00	ARANDELA	WASHER	RONDELLA	RONDELLE
11	REC90170-16M19	90170-16M19	TUERCA	LOCK NUT	DADO	ÉCROU
12	REC93608-12M05	93608-12M05	PASADOR	PIN	SPINOTTO	PIN
13	REC69J-45375-00	69J-45375-00	GOMA ESCAPE COLA	EXHAUST DAMPER	GOMMA SCARICO	JOINTD'ECHAPPEMENT
14	PAT85-00000012	90105-10M00	TORNILLO	SCREW	VITE	VIS
15	REC61A-45641-02	61A-45641-02	CAMBIO	SHIFTER	CAMBIO	SHIFTER
16	REC93332-000W1	93332-000W1	COJINETE	BEARING	CUSCINETTO	ROULEMENT
17	REC93501-04011	93501-04011	ESFERA	BALL	SFERA	BILLE
18	REC61A-45634-01	61A-45634-01	PASADOR DESPLAZABLE	SLIDE SHIFT	SPINOTTO SCORREVOLE	PIN REGLABLE
19	REC90183-02M03	90183-02M03	TUERCA DE RESORTE	SPRING NUT	DADO MOLLA	RONDELLE FREIN
20	REC6H1-45668-00	6H1-45668-00	EJE	FREE SHAFT	ASSE	ARBRE
21	REC61A-45635-00	61A-45635-00	ÉMBOLO DE CAMBIO	SHIFT PLUNGER	GOMMINI	SHIFT
22	REC90501-10M77	90501-10M77	RESORTE DE COMPRESIÓN	SPRING	MOLLA	RESSORT
23	REC90201-02M00	90201-02M00	ARANDELA PLANA	WASHER	RONDELLA	RONDELLE
24	REC69J-45631-00	69J-45631-00	EMBRAGUE DE GARRA	CLUTH	SELETTORE	CRABOT
25	REC61A-45632-00	61A-45632-00	PASADOR	PIN	SPINOTTO	LEVIER
26	REC61A-45633-00	61A-45633-00	ANILLO DEL PASADOR	ANNULAR SPRING, CLUTCH	ANELLO	RESSORT
27	REC69J-45611-00	69J-45611-00	EJE	SHAFT	ASSE	ARBRE D'HELICE
28	REC90201-31M00	90201-31M00	ARANDELA PLANA	WASHER	RONDELLA	RONDELLE
29	REC61A-45577-00/60-0	61A-45577-00	KIT GRUESOS (0.10-0.50 mm)	KIT SHIM (0.10-0.50 mm)	KIT SPESSORE (0.10-0.50 mm)	KIT CALES (0.10 - 0.50 mm)
30	REC93306-210U0	93306-210U0	COJINETE	BEARING	CUSCINETTO	ROULEMENT
31	REC93211-04384	93211-04384	TÓRICA	O-RING	O-RING	JOINT TORIQUE
32	REC93315-43061	93315-43061	COJINETE	BEARING	CUSCINETTO	ROULEMENT
33	REC93101-30M17	93101-30M17	RETÉN DE ACEITE	OIL SEAL	PARAOLIO	ROULEMENT
34	REC69J-45361-00-8D	69J-45361-00-8D	FUNDA INFERIOR	CAO LOWER CASING	COVER INFERIORE	COUVERCLE INFERIEUR
35	PAF4-04000001	97095-08020	PERNO	STUD	BULLONE	BOULON
36	REC688-45997-00	688-45997-01	ESPACIADOR AP	DISTANCE WASHER	DISTANZIALE	BRIDE
37	REC92990-18200	92990-18200	ARANDELA PLANA	WASHER	RONDELLA	RONDELLE
38	REC90171-18M04	90171-18M04	TUERCA	LOCK NUT	DADO	ÉCROU
39	REC91490-40030	91490-40030	PASADOR	PIN	SPINOTTO	CLAVETTE

			CONTRA ROTACIÓN	COUNTER ROTATION	CONTRO ROTANTE	CONTRE ROTATION
40	REC61A-45567-00/60-0	61A-45567-00	KIT GRUESOS (0.10-0.50 mm)	KIT SHIM (0.10-0.50 mm)	KIT SPESSORE (0.10-0.50 mm)	KIT CALES (0.10 - 0.50 mm)
41	REC93332-00048	93332-00048	COJINETE	BEARING	CUSCINETTO	ROULEMENT
42	REC69K-45611-00	69K-45611-00	EJE	SHAFT	ASSE	ARBRE D'HELICE

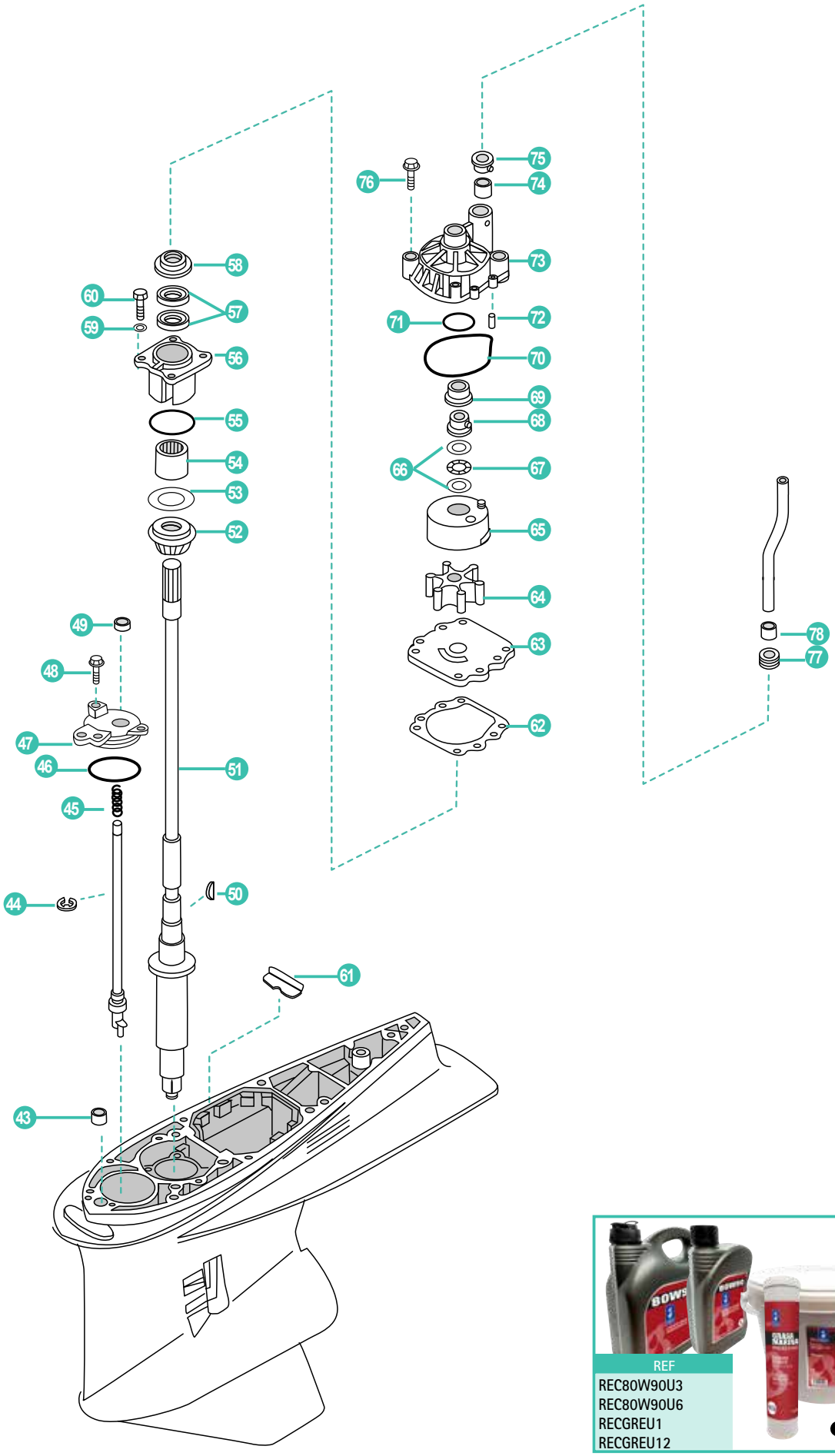

REF
REC80W90U3
REC80W90U6
RECGREU1
RECGREU12

P. 43

	REF	OEM				
43	REC663-44366-00	663-44366-00	RETEN TUBO AGUA	DAMPER, WATER SEAL	GHIERA	JOINT DE TUBE D'EAU
44	REC99001-08600-00	99001-08600	CLIP	CLIP	CLIP	CLIP
45	REC90501-11M10-00	90501-11M10	RESORTE DE COMPRESIÓN	SPRING	MOLLA	RESSORT
46	REC93210-65752-00	93210-64488	TÓRICA	O-RING	O-RING	JOINT TORIQUE
47	REC61A-45321-01	61A-45321-01	TAPA CAMBIO	SHIFT SHAFT COVER	SHIFT SHAFT COVER	COUVERCLE ARBRE DE TRANSMISSION
48	REC90119-06M10	90119-06M10	TORNILLO CON ARANDELA	SCREW WITH WASHER	VITE CON RONDELLA	VIS AVEC RONDELLE
49	REC93106-09014	93106-09014	RETÉN DE ACEITE	OIL SEAL	PARAOLIO	ROULEMENT
50	REC90280-04M05	90280-04M05	CUÑA	KEY WOODRUFF	CHIAVETTA	CLAVETTE
51	REC63P-45501-00	63P-45501-00	EJE TRASMISION 20"	DRIVE SHAFT 20"	ALBERO DI TRASMISSIONE 20"	ARBRE TRASMISION 20"
	REC63P-45501-10	63P-45501-10	EJE TRASMISION 25"	DRIVE SHAFT 25"	ALBERO DI TRASMISSIONE 25"	ARBRE TRASMISION 25"
52	REC93341-93020	93341-93020	COJINETE	BEARING	CUSCINETTO	CLAVETTE
53	REC61A-45587-00/60-0	61A-45587-00	KIT GRUESOS (0.10-0.50 mm)	KIT SHIM (0.10-0.50 mm)	KIT SPESSORE (0.10-0.50 mm)	KIT CALES (0.10 - 0.50 mm)
54	REC93317-330U2	93317-330U2	COJINETE	BEARING	CUSCINETTO	ROULEMENT
55	REC93210-54534	93210-54534	TÓRICA	O-RING	O-RING	JOINT TORIQUE
56	REC61A-45331-00-94	61A-45331-00-94	DIÁBOLO	GEAR HOUSING	DIAVOLO	DIABOLO
57	REC93101-28M16	93101-28M16	RETÉN DE ACEITE	OIL SEAL	PARAOLIO	JOINT SPI
58	REC6E5-45344-00	6E5-45344-00	CUBIERTA SELLO DE ACEITE	RETAINER	COPERCHIO PARAOLIO	RETENUE
59	PAGB/T97.1-8	92995-08600	ARANDELA	WASHER	RONDELLA	RONDELLE
60	PAGB/T5783-M8X25	97095-08025	PERNO	STUD	BULLONE	BOULON
61	REC61A-45376-00-94	61A-45376-00	GUÍA SELLO DE GOMA	GUIDE	GUIDE	GUIDE
62	REC6E5-44315-A0	6E5-44315-A0	JUNTA	GASKET	GUARNIZIONE	JOINT
63	REC6G5-44323-00	6G5-44323-00	TAPA BOMBA	OUTER PLATE	COPERCHIO POMPA	PLAQUE DE POMPE À EAU
64	REC6E5-44352-01	6E5-44352-01	TURBINA	IMPELLER	GIRANTE	TURBINE
65	REC61A-44322-02	61A-44322-02	TAPA, BOMBA AGUA	COVER, INNER WATER PUMP	COPERCHIO, POMPE ACQUA	INSERT DE POMPE A EAU
66	REC90201-22M01	90201-22M01	ARANDELA	WASHER	RONDELLA	RONDELLE
67	REC90206-22M19	90206-22M19	ARANDELA ONDULADA	WAVE WASHER	RONDELLA ONDULATA	RONDELLE
68	REC61A-45538-00	61A-45538-00	ESPACIADOR	SPACER	SPESSORE	ENTRETOISE
69	REC61A-45527-00	61A-45527-00	CASQUILLO CUERPO BOMBA	COLLAR	BOCCOLA CORPO POMPA	BAGUE POMPE À EAU
70	REC93210-86M38	93210-86M38	TÓRICA	O-RING	O-RING	JOINT TORIQUE
71	REC93210-37160	93210-37160	TÓRICA	O-RING	O-RING	JOINT TORIQUE
72	REC93606-12019	93606-12019	PASADOR	PIN	SPINOTTO	PIN
73	REC61A-44311-00	61A-44311-01	CUERPO BOMBA AGUA	HOUSING, WATER PUMP	CORPO POMPA	CORPS DE POMPE A EAU
74	REC6E5-44365-00	6E5-44365-00	GOMA DEL SELLO DE AGUA	DAMPER WATER TUBE	GUARNIZIONE	BAGUE DE TUBE D'EAU
75	REC6E5-44312-00	6E5-44312-00	CUBIERTA CAJA DE BOMBA DE AGUA	WATER PUMP COVER	COPERCHIO POMPA ACQUA	BAGUE DE POMPE À EAU
76	REC90119-08M14	90119-08M14	TORNILLO CON ARANDELA	SCREW WITH WASHER	VITE CON RONDELLA	VIS AVEC RONDELLE
77	REC6E5-44366-00	6E5-44366-00	GOMA DEL SELLO DE AGUA	DAMPER WATER TUBE	GUARNIZIONE	BAGUE DE TUBE D'EAU
78	REC6E5-44365-00	6E5-44365-00	GOMA TUBO AGUA	DAMPER WATER TUBE	GOMMA TUBO ACQUA	BAGUE DE TUBE D'EAU

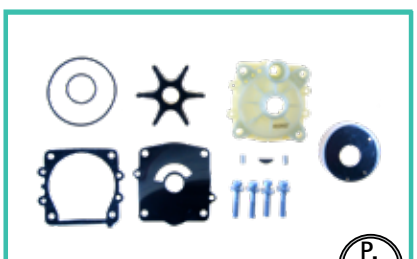

P. 146

REF	OEM
REC61A-W0078-A1	61A-W0078-A3



P. 158

REF	OEM	
REC64J-W0001-20	69J-W0001-20	2002-03



P. 146

REF	OEM	
REC64J-W0001-21	69J-W0001-21	2004-05

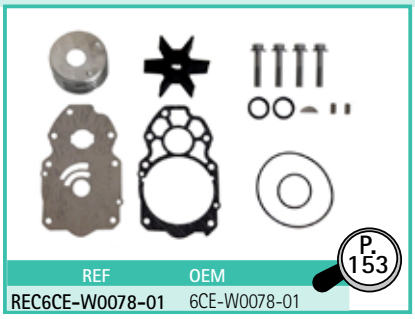

REF	OEM
REC6CE-W0078-01	6CE-W0078-01

P. 153



REF
REC80W90U3
REC80W90U6
RECGREU1
RECGREU12

P. 43

P. 402

	REF	OEM				
1	REC90340-08002	90304-08002	TORNILLO DRENAJE	BOLT, DISCHARGING OIL	VITE DRENAGGIO	BOUCHON DE VIDANGE
2	REC90430-08020	90430-08020	JUNTA	GASKET	GUARNIZIONE	JOINT
3	PAGB/T6182-M5	90185-05002	TUERCA	LOCK NUT	DADO	ÉCROU
4	REC688-45341-00	688-45341-10	TORNILLO DRENAJE	BOLT, DISCHARGING OIL	VITE DRENAGGIO	BOUCHON DE VIDANGE
5	CM61A-45371-00A	61A-45371-00	ÁNODO	ANODE	ANODO	ANODE
6	REC93311-83280	93311-83280	COJINETE	BEARING	CUSCINETTO	ROULEMENT
7	REC90201-16M00	90201-16M00	ARANDELA	WASHER	RONDELLA	RONDELLE
8	REC90170-16M19	90170-16M19	TUERCA	LOCK NUT	DADO	ÉCROU
9	REC99001-08600-00	99001-08600	ARANDELA	WASHER	RONDELLA	RONDELLE
10	PAJASOF404-19-033	93210-33M49	TÓRICA	O-RING	O-RING	JOINT TORIQUE
11	REC65N-45321-00	65N-45321-00	TAPA SELECTOR	PLATE	COPERCHIO SELETTORE	COUVERCLE DU SELECTEUR
12	REC93106-09014	93106-09014	RETÉN DE ACEITE	OIL SEAL	PARAOLIO	JOINT SPI
13	REC663-45376-00	663-45376-00	GUÍA DE SELLO DE GOMA	GUIDE RUB. SEAL	GUIDA PARAOLIO	GUIDE
14	REC90280-04002	90280-04002	CUÑA	KEY WOODRUFF	CHIAVETTA	CLAVETTE
15	REC93210-65752-00	93210-64488	TÓRICA	O-RING	O-RING	JOINT TORIQUE
16	PAGB/T97.1-8	92995-08600	ARANDELA	WASHER	RONDELLA	RONDELLE
17	PAF4-04000001	97095-08020	PERNO	STUD	BULOONE	BOULON
18	REC93101-28M16	93101-28M16	RETÉN DE ACEITE	OIL SEAL	PARAOLIO	JOINT SPI
19	REC6D0-44367-00	6D0-44367-00	GOMA DEL SELLO DE AGUA	DAMPER, WATER SEAL	GOMMA TUBO ACQUA	MANCHON TUBE D'EAU
20	REC6D0-44362-01	6D0-44362-01	TUBO DE AGUA	WATER TUBE	TUBO ACQUA	DURITE D'EAU
21	PAT85-00000012	90105-10M00	TORNILLO	BOLT	VITE	VIS
22	REC6CE-44315-00	6CE-44315-00	JUNTA	GASKET	GUARNIZIONE	JOINT
23	REC6CE-44323-01	6CE-44323-01	TAPA BOMBA	OUTER PLATE, CARTRIDGE	COPERCHIO POMPA ACQUA	PLAQUE DE POMPE À EAU
24	REC6CE-44352-00	6CE-44352-01	TURBINA	IMPELLER	GIRANTE	TURBINE
25	REC6AW-44322-00	6AW-44322-00	TAPA, BOMBA AGUA	COVER, INNER WATER PUMP	COPERCHIO, POMPE ACQUA	INSERT DE POMPE A EAU
26	REC93210-94003	93210-94003	TÓRICA	O-RING	O-RING	JOINT TORIQUE
27	REC93210-37160	93210-37160	TÓRICA	O-RING	O-RING	JOINT TORIQUE
28	REC93606-12019	93606-12019	PASADOR	PIN	SPINOTTO	PIN
29	REC6CE-44311-01	6CE-44311-01	CUERPO BOMBA AGUA	HOUSING, WATER PUMP	CORPO POMPA	CORPS DE POMPE A EAU
30	REC90119-08M14	90119-08M14	TORNILLO CON ARANDELA	SCREW WITH WASHER	VITE CON RONDELLA	VIS AVEC RONDELLE
31	REC6AW-44365-00	6AW-44365-00	GOMA DEL SELLO DE AGUA	DAMPER, WATER SEAL	ANELLO TUBO ACQUA	RETENUE TUBE D'EAU
32	REC6AW-44312-00	6AW-44312-00	CUBIERTA CAJA DE BOMBA DE AGUA	WATER PUMP COVER	COPERCHIO POMPA ACQUA	BAGUE DE POMPE À EAU
33	REC93104-22M07	93104-22M07	RETÉN DE ACEITE	OIL SEAL	PARAOLIO	ROULEMENT
34	REC93311-85894	93311-85894	COJINETE	BEARING	CUSCINETTO	ROULEMENT
35	REC93340-67011	93340-67011	COJINETE	BEARING	CUSCINETTO	ROULEMENT
36	REC93501-04011	93501-04011	ESFERA	BALLE	SFERA	BILLE
37	REC90183-02M03	90183-02M03	TUERCA DE RESORTE	SPRING NUT	DADO MOLLA	RONDELLE FREIN
38	REC6H1-45668-00	6H1-45668-00	EJE	SHAFT	ASSE	ARBRE
39	REC61A-45635-00	61A-45635-00	ÉMBOLO DE CAMBIO	SHIFT PLUNGER	GUARNIZIONE	SHIFT
40	REC90501-10M77	90501-10M77	RESORTE DE COMPRESIÓN	SPRING	MOLLA	RESSORT
41	REC90201-02M00	90201-02M00	ARANDELA PLANA	WASHER	RONDELLA	RONDELLE
42	REC90250-08M07	90250-08M07	PASADOR	PIN	SPINOTTO	PIN
43	REC6E5-45633-01	6E5-45633-01	ANILLO DEL PASADOR	ANULAR SPRING, CLUTCH	ANELLO	RESSORT
44	REC6CB-45611-00	6CB-45611-00	EJE	SHAFT	ASSE	ARBRE D'HELICE
45	REC93306-209U0	93306-209U0	COJINETE	BEARING	CUSCINETTO	ROULEMENT
46	REC93332-000A5	93332-000A5	COJINETE	BEARING	CUSCINETTO	ROULEMENT
47	REC93315-43061	93315-43061	COJINETE	BEARING	CUSCINETTO	ROULEMENT
48	REC93101-30002	93101-300002	RETÉN DE ACEITE	OIL SEAL	PARAOLIO	JOINT SPI
49	REC688-45997-00	688-45997-01	ESPACIADOR	SPACER	SPESSORE	ENTRETOISE
50	REC92990-18200	92990-18200	ARANDELA PLANA	WASHER	RONDELLA	RONDELLE
51	REC90171-18M04	90171-18M04	TUERCA	LOCK NUT	DADO	ÉCROU
52	REC91490-40030	91490-40030	PASADOR	PIN	SPINOTTO	CLAVETTE

4T STROKES F250A/B/T

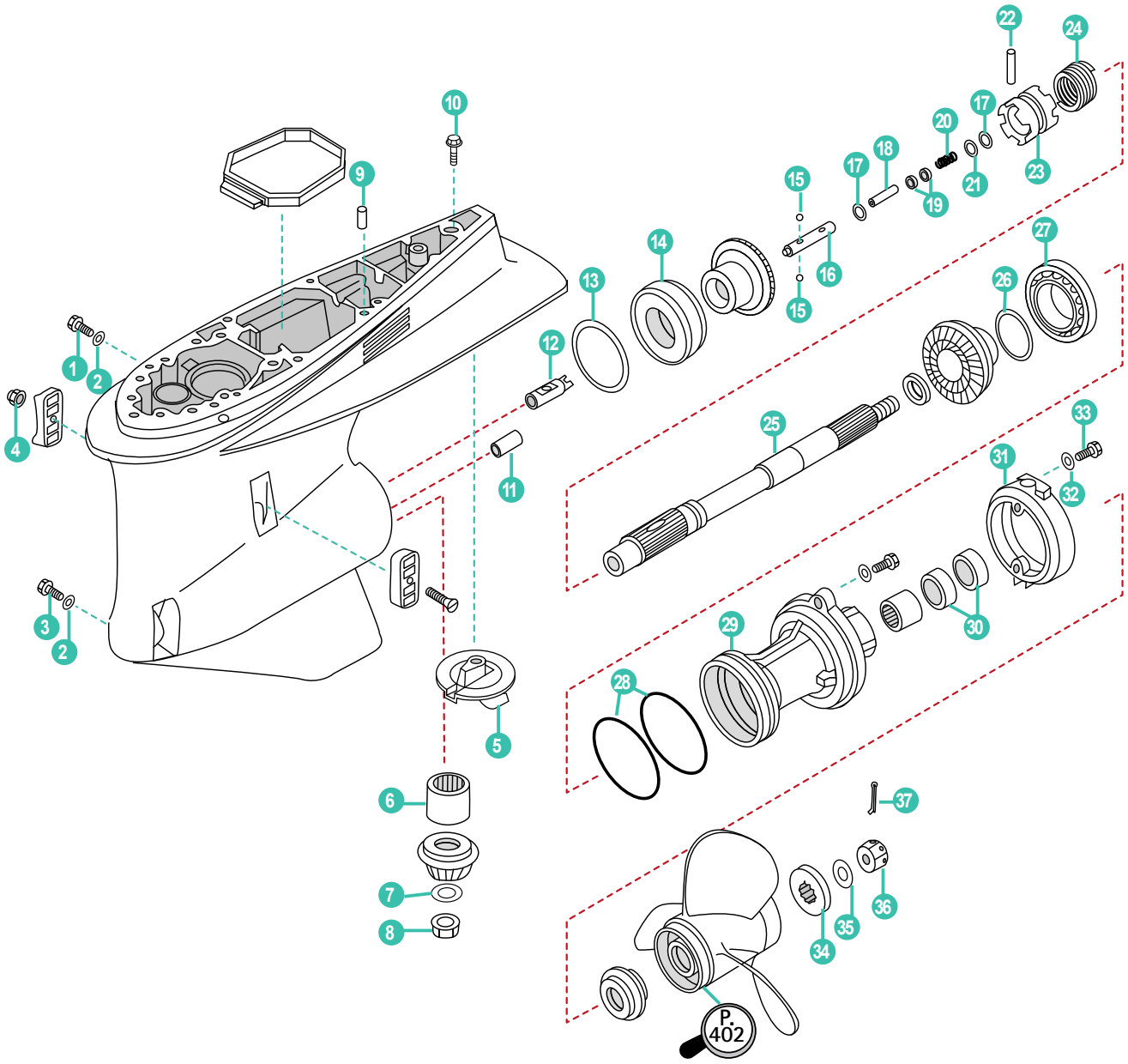



REF	OEM
REC6P2-W0078-00	61P2-W0078-00

P. 153



REF
REC80W90U3
REC80W90U6
RECGREU1
RECGREU12

P. 43

	REF	OEM				
1	REC90340-08002	90304-08002	TORNILLO DRENAJE	BOLT, DISCHARGING OIL	VITE DRENAGGIO	VIS DE VIDANGE
2	REC90430-08020	90430-08020	JUNTA	GASKET	GUARNIZIONE	JOINT
3	REC688-45341-00	688-45341-10	TORNILLO DRENAJE	BOLT, DISCHARGING OIL	VITE DRENAGGIO	VIS DE VIDANGE
4	PAGB/T6182-M5	90185-05002	TUERCA	LOCK NUT	DADO	ÉCROU
5	CM61A-45371-00A	61A-45371-00	ÁNODO	ANODE	ANODO	ANODE
6	REC93311-83280	93311-83280	COJINETE	BEARING	CUSCINETTO	PALIER
7	REC90201-16M00	90201-16M00	ARANDELA	WASHER	RONDELLA	RONDELLE
8	REC90170-16M19	90170-16M19	TUERCA	LOCK NUT	DADO	ÉCROU
9	REC93608-12M05	93608-12M05	PASADOR	PIN	SPINOTTO	LEVIER
10	PAT85-00000012	90105-10M00	TORNILLO	SCREW	VITE	VIS
11	REC99590-10114	99590-10114	PASADOR	PIN	SPINOTTO	LEVIER
12	REC61A-45641-02	61A-45641-02	CAMBIO	SHIFTER	CAMBIO	SHIFTER
13	REC61A-45567-00/60-0	61A-45567-00	KIT GRUESOS (0.10-0.50 mm)	KIT SHIM (0.10-0.50 mm)	KIT SPESSORE (0.10-0.50 mm)	KIT CALES (0.10 - 0.50 mm)
14	REC93332-000W1	93332-000W1	COJINETE	BEARING	CUSCINETTO	ROULEMENT
15	REC93501-04011	93501-04011	ESFERA	BALL	SFERA	BILLE
16	REC61A-45634-01	61A-45634-01	DESLIZADOR CAMBIO	SHIFT SLIDE	SPINOTTO SCORREVOLE	SHIFT
17	REC90183-02M03	90183-02M03	TUERCA DE RESORTE	SPRING NUT	DADO MOLLA	RONDELLE FREIN
18	REC6H1-45668-00	6H1-45668-00	EJE	SHAFT	ASSE	ARBRE
19	REC61A-45635-00	61A-45635-00	DESLIZADOR CAMBIO	SHIFT SLIDE	SPINOTTO	SHIFT
20	REC90501-10M77	90501-10M77	RESORTE DE COMPRESIÓN	SPRING	MOLLA	RESSORT
21	REC90201-02M00	90201-02M00	ARANDELA PLANA	WASHER	RONDELLA	RONDELLE
22	REC61A-45632-00	61A-45632-00	PASADOR	PIN	SPINOTTO	PIN
23	REC69J-45631-00	69J-45631-00	EMBRAGUE DE GARRA	CLUTH	SELETTORE	CRABOT
24	REC61A-45633-00	61A-45633-00	ANILLO DEL PASADOR	ANNULAR SPRING, CLUTCH	ANELLO	RESSORT
25	REC69J-45611-00	69J-45611-00	EJE	SHAFT	ASSE	ARBRE
	REC69K-45611-00	69K-45611-00	EJE CONTRARROTACIÓN	CR SHAFT	ASSE CR	ARBRE D'HELICE CR
26	REC61A-45577-00/60-0	61A-45577-00	KIT GRUESOS (0.10-0.50 mm)	KIT SHIM (0.10-0.50 mm)	KIT SPESSORE (0.10-0.50 mm)	KIT CALES (0.10 -0.50 mm)
27	REC93306-210U0	93306-210U0	COJINETE	BEARING	CUSCINETTO	ROULEMENT
28	REC93211-04384	93211-04384	TÓRICA	O-RING	O-RING	JOINT TORIQUE
29	REC6D0-45332-00-CA	6D0-45332-00-CA	DIÁBOLO	GEAR HOUSING	DIAVOLO	DIABOLO
30	REC93101-30002	93101-300002	RETÉN DE ACEITE	OIL SEAL	PARAOLIO	JOINT SPI
31	REC6D0-45361-00-8D	6D0-45361-00-8D	FUNDA INFERIOR	CAO LOWER CASING	COVER INFERIORE	COUVERCLE INFERIEUR
32	PAF4-04000001	97095-08020	PERNO	BOLT	BULONE	BOULON
33	PAGB/T97.1-8	92995-08600	ARANDELA	WASHER	RONDELLA	RONDELLE
34	REC688-45997-00	688-45997-01	ESPACIADOR	SPACER	SPESSORE	CALES
35	REC92990-18200	92990-18200	ARANDELA PLANA	WASHER	RONDELLA	RONDELLE
36	REC90171-18M04	90171-18M04	TUERCA	LOCK NUT	DADO	ÉCROU
37	REC91490-40030	91490-40030	PASADOR	PIN	SPINOTTO	CLAVETTE

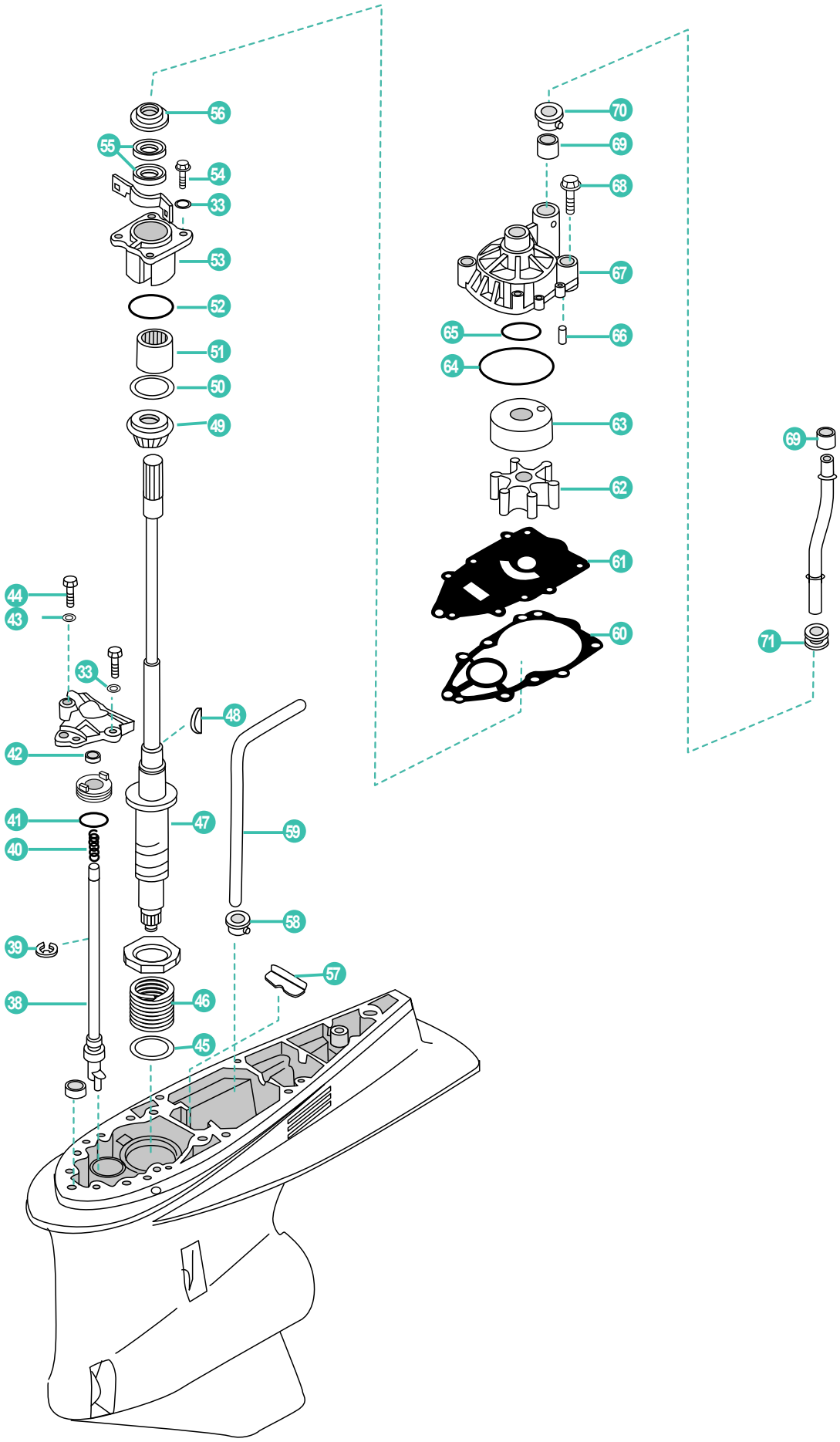
56
55
54
33
53
52
51
50
49
44
43
33
48
42
41
47
59
40
58
39
57
38
46
45
70
69
68
67
65
66
64
63
62
61
60
69
71

	REF	OEM				
38	REC6P2-44150-00	6P2-44150-00	VARILLA SELECTOR	SHIFT CAM ASSY	ASTA SELETTORE	TIGE DE SELECTEUR
39	REC99001-08600-00	99001-08600	CLIP	CLIP	RONDELLA	CLIP
40	REC90501-11M10-00	90501-11M10	RESORTE DE COMPRESIÓN	SPRING	MOLLA	RESSORT
41	PAJASOF404-19-033	93210-33M49	TÓRICA	O-RING	O-RING	JOINT TORIQUE
42	REC93106-09014	93106-09014	RETÉN DE ACEITE	OIL SEAL	PARAOLIO	ROULEMENT
43	PAGB/T97.1-6	92995-06600	ARANDELA	WASHER	RONDELLA	RONDELLE
44	PAGB/T5783-M6X16	97095-06016	PERNO	BOLT	BULLONE	BOULON
45	REC90201-42014	90201-42014	ARANDELA PLANA	WASHER	RONDELLA	RONDELLE
46	REC90501-450A2	90501-450A2	RESORTE	SPRING	MOLLA	RESSORT
47	REC6P2-45501-11	6P2-45501-10	EJE TRANSMISION U (30.3)	DRIVE SHSFT U	ASSE TRASMISSIONE U (30.3)	ARBRE DE TRANSMISSION U (30,3)
	REC6P2-45501-01	6P2-45501-00	EJE TRANSMISION X (25.3)	DRIVE SHSFT X	ASSE TRASMISSIONE X (25.3)	ARBRE DE TRANSMISSION X (25,3)
48	REC90280-04M05	90280-04M05	CUÑA	KEY WOODRUFF	CHIAVETTA	CLAVETTE
49	REC93341-93020	93341-930U9	COJINETE	BEARING	CUSCINETTO	ROULEMENT
50	REC61A-45587-00/60-0	61A-45587-00	KIT GRUESOS (0.10-0.50 mm)	KIT SHIM (0.10-0.50 mm)	KIT SPESSORE (0.10-0.50 mm)	KIT CALES (0.10 - 0.50 mm)
51	REC93317-330U2	93317-330U2	COJINETE	BEARING	CUSCINETTO	ROULEMENT
52	REC93210-54534	93210-54534	TÓRICA	O-RING	O-RING	JOINT TORIQUE
53	REC6P2-45331-00-9S	6P2-45331-00-9S	CAJA DE COJINETE	HOUSING, BEARING	SCATOLA CUSCINETTO	PALIER DE ROULEMENT
54	PAGB/T5783-M8X25	97095-08025	PERNO	BOLT	BULLONE	BOULON
55	REC93101-28M16	93101-28M16	RETÉN DE ACEITE	OIL SEAL	PARAOLIO	JOINT SPI
56	REC6E5-45344-00	6E5-45344-00	TAPA RETEN	RETAINER	COPERCHIO PARAOLIO	RETENUE
57	REC61A-45376-00-94	61A-45376-00	GUÍA SELLO DE GOMA	GUIDE	GUIDA	GUIDE
58	REC6D0-44367-00	6D0-44367-00	GOMA TUBO AGUA	DAMPER, WATER SEAL	GOMMA TUBO ACQUA	MANCHON TUBE D'EAU
59	REC6D0-44362-01	6D0-44362-01	TUBO DE AGUA	WATER TUBE	TUBO ACQUA	TUBE D'EAU
60	REC60X-44315-A0	60X-44315-A0	JUNTA	GASKET	GUARNIZIONE	JOINT
61	REC6P2-44323-00	6P2-44323-00	PLACA EXTERIOR DEL CARTUCHO	OUTER PLATE	PLACCA ESTERNA	PLAQUE DE POMPE À EAU
62	REC6E5-44352-01	6E5-44352-01	TURBINA	IMPELLER	GIRANTE	TURBINE
63	REC61A-44322-02	61A-44322-02	TAPA, BOMBA AGUA	COVER, INNER WATER PUMP	COPERCHIO, POMPE ACQUA	INSERT DE POMPE A EAU
64	REC93210-86M38	93210-86M38	TÓRICA	O-RING	O-RING	JOINT TORIQUE
65	REC93210-37160	93210-37160	TÓRICA	O-RING	O-RING	JOINT TORIQUE
66	REC93606-12019	93606-12019	PASADOR	PIN	SPINOTTO	PIN
67	REC61A-44311-00	61A-44311-01	CUERPO BOMBA AGUA	HOUSING, WATER PUMP	CORPO POMPA	CORPS DE POMPE A EAU
68	REC90119-08M14	90119-08M14	TORNILLO CON ARANDELA	SCREW WITH WASHER	VITE CON RONDELLA	VIS AVEC RONDELLE
69	REC6E5-44365-00	6E5-44365-00	GOMA DEL SELLO DE AGUA	DAMPER, WATER SEAL	ANELLO TUBO ACQUA	RETENUE TUBE D'EAU
70	REC6E5-44312-00	6E5-44312-00	CUBIERTA CAJA DE BOMBA DE AGUA	WATER PUMP COVER	COPERCHIO POMPA ACQUA	GUIDE DE POMPE À EAU
71	REC6E5-44366-00	6E5-44366-00	GOMA DEL SELLO DE AGUA	DAMPER, WATER SEAL	ANELLO TUBO ACQUA	RETENUE TUBE D'EAU
	REC422-B25F	6P2-45300-20-8D 6P2-45300-21-8D	CONJUNTO INFERIOR COMPLETO	COMPLETE GEARCASE	PIEDE COMPLETO	EMBASE COMPLETE
	REC429-B25F	6P3-45300-40-8D 6P3-45300-41-8D	CONJUNTO INFERIOR COMPLETO CONTRA ROTACIÓN	COMPLETE GEARCASE COUNTER ROTATION	PIEDE COMPLETO CONTRO ROTANTE	EMBASE COMPLETE CONTRE ROTATION

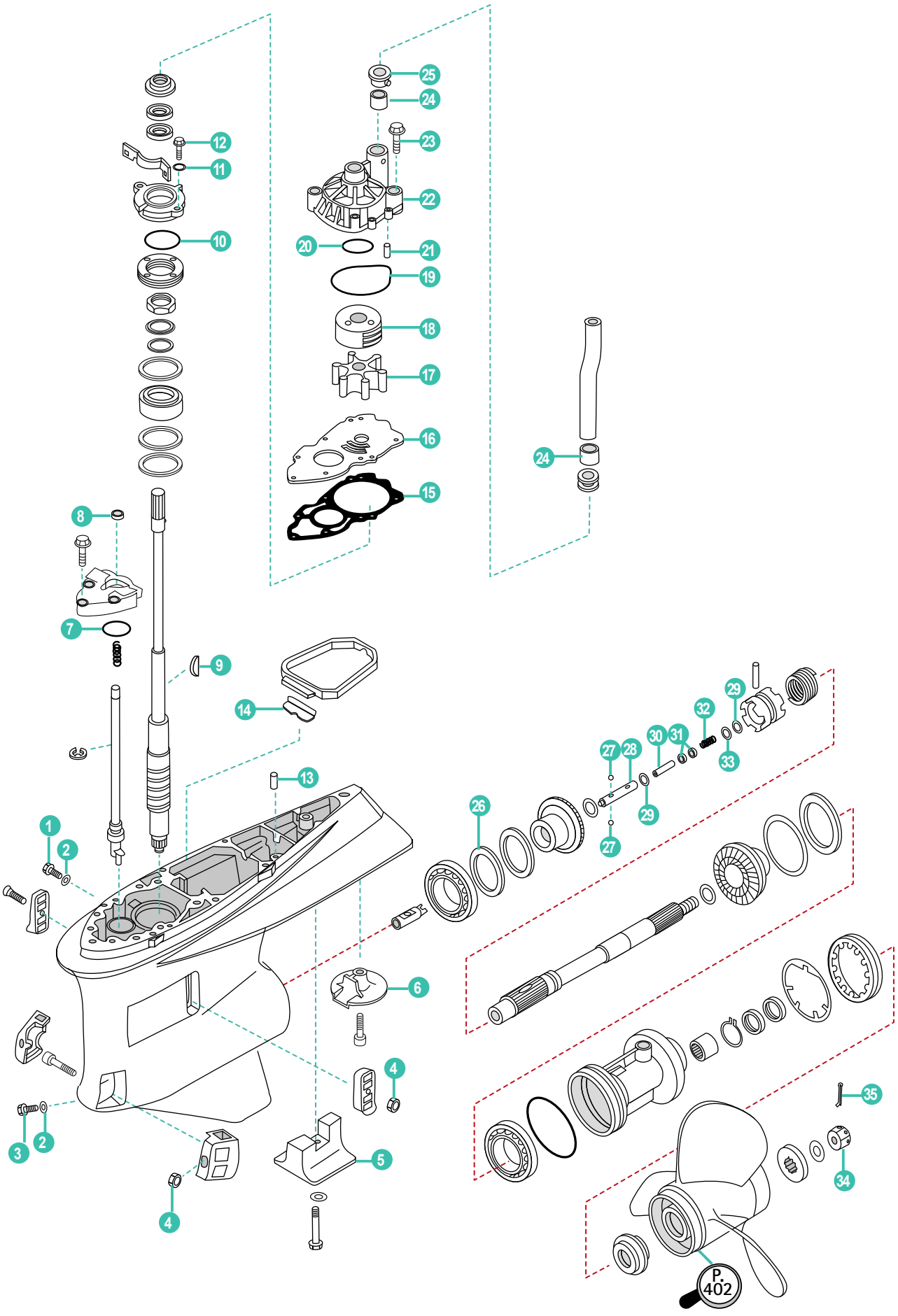
25
24
12
23
11
22
10
20
21
19
18
17
16
24
15
8
7
9
14
13
29
32
30
31
27
28
33
1
2
26
29
27
6
4
3
2
5
4
35
34
P. 402

	REF	OEM				
1	REC90340-08002	90304-08002	TORNILLO DRENAJE	BOLT, DISCHARGING OIL	VITE DRENAGGIO	BOUCHON DE VIDANGE
2	REC90430-08020	90430-08020	JUNTA	GASKET	GUARNIZIONE	JOINT
3	REC688-45341-00	688-45341-10	TORNILLO DRENAJE	BOLT, DISCHARGING OIL	VITE DRENAGGIO	BOUCHON DE VIDANGE
4	PAGB/T6182-M5	90185-05002	TUERCA	LOCK NUT	DADO	ÉCROU
5	CM6AW-45373-00A	6AW-45373-00	ÁNODO	ANODE	ANODO	ANODE
6	CM6AW-45619-00A	6AW-45619-00	ÁNODO	ANODE	ANODO	ANODE
7	REC93210-48214	93210-48214	TÓRICA	O-RING	O-RING	JOINT TORIQUE
8	REC93101-12M70	93101-12M70	RETÉN DE ACEITE	OIL SEAL	PARAOLIO	JOINT SPI
9	REC6AW-44336-00	6AW-44336-00	CUÑA	KEY WOODRUFF	CHIAVETTA	CLAVETTE
10	REC93210-69MG6	93210-69MG6	TÓRICA	O-RING	O-RING	JOINT TORIQUE
11	PAGB/T97.1-8	92995-08600	ARANDELA	WASHER	RONDELLA	RONDELLE
12	PAF4-04000001	97095-08020	PERNO	BOLT	BULLONE	BOULON
13	REC93608-12M05	93608-12M05	PASADOR	PIN	SPINOTTO	PIN
14	REC61A-45376-00-94	61A-45376-00-94	GUÍA DE SELLO DE GOMA	GUIDE	GUIDE	GUIDE
15	REC6AW-44315-00	6AW-44315-00	JUNTA	GASKET	GUARNIZIONE	JOINT
16	REC6AW-44323-00	6AW-44323-00	TAPA BOMBA	OUTER PLATE, CARTRIDGE	COPERCHIO POMPA D'ACQUA	PLAQUE DE POMPE À EAU
17	REC6AW-44352-00	6AW-44352-00	TURBINA	IMPELLER	GIRANTE	TURBINE
18	REC6AW-44322-00	6AW-44322-00	TAPA, BOMBA AGUA	COVER, INNER WATER PUMP	COPERCHIO, POMPE D'EAU	INSERT DE POMPE A EAU
19	REC93210-94003	93210-94003	TÓRICA	O-RING	O-RING	JOINT TORIQUE
20	REC93210-37160	93210-37160	TÓRICA	O-RING	O-RING	JOINT TORIQUE
21	REC93606-12019	93606-12019	PASADOR	PIN	SPINOTTO	PIN
22	REC6AW-44311-01	6AW-44311-00	CUERPO BOMBA AGUA	HOUSING, WATER PUMP	CORPO POMPA	CORPS DE POMPE A EAU
23	REC90119-08M14	90119-08M14	TORNILLO CON ARANDELA	SCREW WITH WASHER	VITE CON RONDELLA	VIS AVEC RONDELLE
24	REC6AW-44365-00	6AW-44365-00	GOMA DEL SELLO DE AGUA	DAMPER, WATER SEAL	ANELLO TUBO ACQUA	RETENUE TUBE D'EAU
25	REC6AW-44312-00	6AW-44312-00	CUBIERTA CAJA DE BOMBA DE AGUA	WATER PUMP COVER	COPERCHIO POMPA ACQUA	BAGUE DE POMPE À EAU
26	REC93340-67011	93340-67011	COJINETE	BEARING	CUSCINETTO	ROULEMENT
27	REC93501-04011	93501-04011	ESFERA	BALL	SFERA	BILLE
28	REC61A-45634-01	61A-45634-01	DESLIZADOR DE CAMBIO	SHIFT SLIDE	SCORREVOLE DEL CAMBIO	SHIFT
29	REC90183-02M03	90183-02M03	TUERCA DE RESORTE	SPRING NUT	DADO MOLLA	RONDELLE FREIN
30	REC6H1-45668-00	6H1-45668-00	EJE	SHAFT	ASSE	ARBRE
31	REC61A-45635-00	61A-45635-00	ÉMBOLO DE CAMBIO	SHIFT PLUNGER	GOMMINO	SHIFT
32	REC90501-10M77	90501-10M77	RESORTE DE COMPRESIÓN	SPRING	MOLLA	RESSORT
33	REC90201-02M00	90201-02M00	ARANDELA PLANA	WASHER	RONDELLA	RONDELLE
34	REC90171-18M04	90171-18M04	TUERCA	LOCK NUT	DADO	ÉCROU
35	REC91490-40030	91490-40030	PASADOR	PIN	SPINOTTO	CLAVETTE

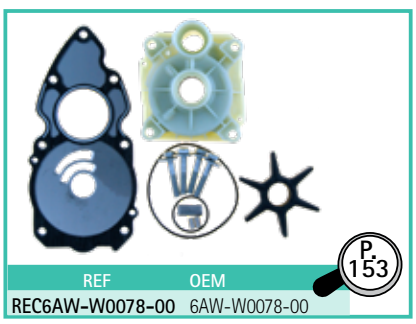

REF OEM
REC6AW-W0078-00 6AW-W0078-00

P. 153



REF
REC80W90U3
REC80W90U6
RECGREU1
RECGREU12

P. 43

2T STROKES 2HP • 2B • 2MSH • 2CMH

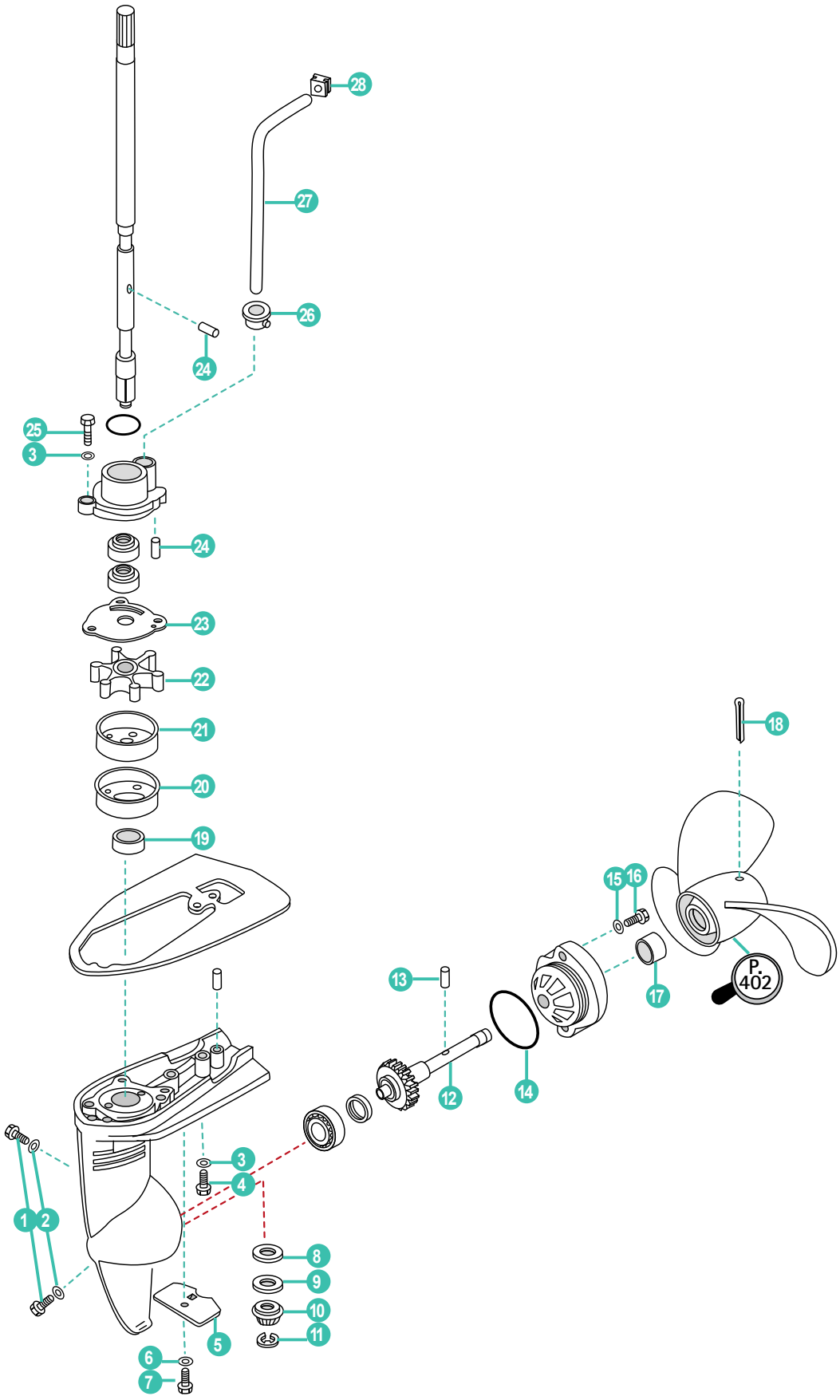

	REF	OEM				
1	REC90340-08002	90340-08M04	TORNILLO DRENAJE	BOLT, DISCHARGING OIL	VITE DRENAGGIO	BOUCHON DE VIDANGE
2	REC90430-08020	90430-08020	JUNTA	GASKET	GUARNIZIONE	JOINT
3	PAGB/T97.1-8	92995-08600	ARANDELA	WASHER	RONDELLA	RONDELLE
4	PAGB/T5783-M6X30	97095-06030	TORNILLO	BOLT	VITE	VIS
5	CM6L5-45251-02	6L5-45251-02	ÁNODO ZINC	ANODE	ANODO ZINCO	ANODE
6	PAGB/T861.1-87	92990-06300	ARANDELA	WASHER	RONDELLA	RONDELLE
7	PAGB/T5783-M6X35	95895-06012	TORNILLO	BOLT, FLANGE	VITE	VIS
8	PAF2.6-03000017	646-45534-00-03	GRUESO	SHIM	SPESSORE	CALE
9	PAF4-03000006	90201-11M49	ARANDELA	WASHER	RONDELLA	RONDELLE
10	REC646-45551-00	646-45551-00	PIÑÓN	PINION	PIGNONE	PIGNON
11	PAGB/T896-86	93430-06005	CLIP	CIRCLIP	CLIP	CLIP
12	REC646-45560-00	646-45560-00	ENGRANAJE CON EJE	GEAR	IGRANAGGIO CON ASSE	PIGNON
13	REC90250-03M10	90250-03M10	PASADOR SEGURIDAD	PIN	SPINOTTO	LEVIER
14	REC93210-42101	93210-42101	ARO TÓRICA	O-RING	O-RING	JOINT TORIQUE
15	PAGB/T97.1-6	92990-06600	ARANDELA	WASHER	RONDELLA	RONDELLE
16	PAGB/T5783-M6X16	97090-06014	TORNILLO	BOLT	VITE	VIS
17	REC93103-10052	93103-10052	RETÉN	OIL SEAL	PARAOLIO	JOINT SPI
18	REC91490-30040	91490-30040	PASADOR ALETAS	PIN	SPINOTTO	PIN
19	REC93103-11051	93103-11051	RETÉN	OIL SEAL	PARAOLIO	JOINT D'HUILE
20	REC6A1-44325-00	6A1-44325-00P	CUERPO INF. BOMBA	PROTECTOR	CORPO INF. POMPA	BASE DE POMPE A EAU
21	REC646-44322-00	646-44322-00	CASQUILLO INOX. BOMBA	INSERT	GHIERA INOX. POMPA	INSERT DE POMPE A EAU
22	REC646-44352-01	646-44352-01	TURBINA	IMPELLER	GIRANTE	TURBINE
23	REC646-44322-00	646-44323-00	PLATO BOMBA AGUA	OUTER PLATE	PIASTRA POMPA ACQUA	PLAQUE DE POMPE À EAU
24	PAF2.6-03000013	93604-09068	PIN	PIN	SPINOTTO	PIN
25	PAGB/T5783-M5X16	97095-05016	TORNILLO	BOLT	VITE	VIS
26	REC646-44366-01	646-44366-01	RETÉN TUBO AGUA	SEAL WATER PIPE	ANELLO TUBO ACQUA	RETENUE TUBE D'EAU
27	REC6A1-44361-00	6A1-44361-00	TUBO AGUA	TUBE, WATER	TUBO ACQUA	TUBE D'EAU
28	REC646-44365-00	646-44365-00	RETÉN TUBO DE AGUA	I-SHAPED RUBBER BAND	ANELLO TUBO ACQUA	RETENUE TUBE D'EAU



P. 150

REF	OEM
REC6A1-W0078-01	6A1-W0078-01



P. 144

REF	OEM
REC6A1-W0001-23	6A1-W0001-23



P. 43

REF
REC80W90U3
REC80W90U6
RECGREU1
RECGREU12

2T STROKES 5HP • 4AC/MSHKZ/AS • 5C/CMH/CS

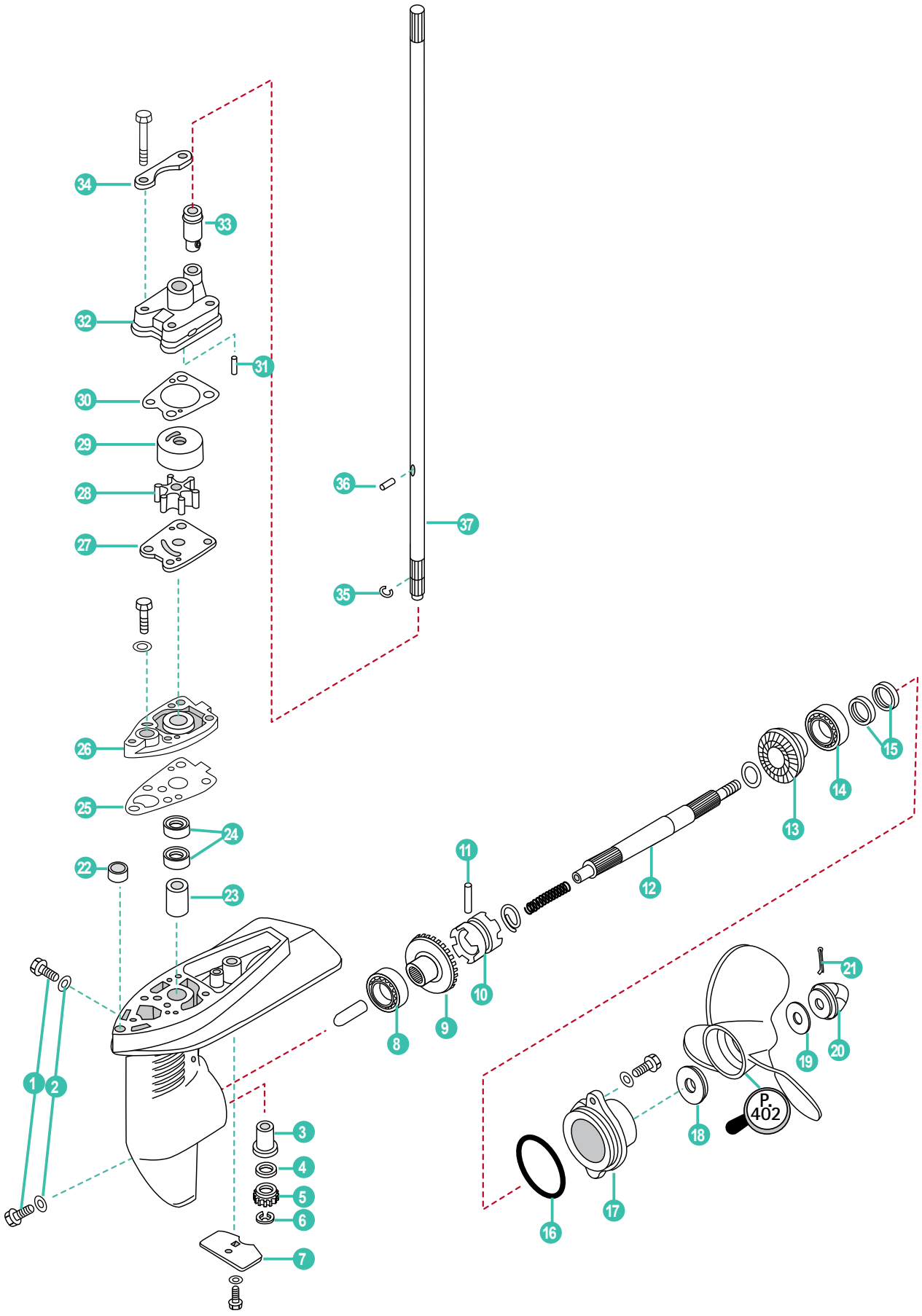

	REF	OEM				
1	REC90340-08002	90340-08002	TAPÓN ACEITE	PLUG, OIL	TAPPO OLIO	BOUCHON REMPLISSAGE D'HUILE
2	REC90430-08020	90430-08020	JUNTA	GASKET	GUARNIZIONE	JOINT
3	REC6E0-45317-00	6E0-45317-09	CASQUILLO EJE	BUSHING	CAPPUCCIO ASSE	BAGUE D'ARBRE
4	PAF4-03000006	90204-11M49	ARANDELA	WASHER	RONDELLA	RONDELLE
5	REC6E0-45551-00	6E0-45551-00	PIÑÓN	PINION	INGRANAGGIO	PIGNON
6	PAGB/T896-86	99001-06600	CIRCLIP	CIRCLIP	CIRCLIP	CIRCLIP
7	CM6L5-45251-02	6L5-45251-03	ÁNODO	ZINC ANODE	ANODO ZINCO	ANODE
8	PAGB/T276-6004C2	93306-004U0	RODAMIENTO	BEARING	CUSCINETTO	ROULEMENT
9	REC6E0-45560-00	6E0-45560-00	ENGRANAJE	GEAR	INGRANAGGIO	PIGNON
10	REC6E0-45631-00	6E0-45631-00	DESPLAZABLE	CLUTCH, DOG	SCORREVOLE	CRABOT
11	REC90250-05046	90250-05046	PASADOR	PIN STRAIGHT	SPINOTTO	PIN
12	REC6E0-45611-01	6E0-45611-01	EJE HÉLICE	SHAFT, PROPELLER	ASSE ELICA	ARBRE D'HELICE
13	REC6E0-45570-00	6E0-45570-00	ENGRANAJE	GEAR	INGRANAGGIO	PIGNON
14	PAGB/T276-6004C2	93306-004U0	RODAMIENTO	BEARING	CUSCINETTO	ROULEMENT
15	REC93101-13M12	93101-13M12	RETÉN	OIL SEAL	PARAOLIO	JOINT SPI
16	REC93210-48214	93210-48214	ARO TÓRICO	O-RING	O-RING	JOINT TORIQUE
17	PAF4-03050001	6E0-45361-01-4D	TAPA CÁRTER	COVER, LOWER CASING	COPERCHIO CARTER	COUVERCLE INFERIEUR EMBASE
18	PAF4-03000025	6L5-45987-01	ESPACIADOR	SPACER	DISTANZIALE	ENTRETOISE
19	PAF4-03000026	90201-08M54	ARANDELA INOX.	WASHER, STAINLESS STEEL	RONDELLA INOX.	RONDELLE INOX
20	REC647-45616-02	6L5-45616-02	TUERCA	NUT, PROPELLER	DADO	ÉCROU
21	PAGB/T91-1.6X12	91490-25030	PASADOR ALETAS	PIN, COTTER	SPINOTTO	PIN
22	PAF4-00000001	90387-06M14	COLLAR	COLLAR	COLLARE	GUIDE CREUX
23	REC6E0-45316-00	6E0-45316-09	CASQUILLO EJE	BUSHING	GHIERA ASSE	BAGUE BRONZE
24	REC93101-10M14	93101-10M14	RETÉN	OIL SEAL	PARAOLIO	JOINT SPI
25	PAF4-03000011	6E0-45315-A0	JUNTA	PACKING	GUARNIZIONE	JOINT
26	PAF4-03000012	6E0-45321-01-5B	BASE BOMBA DE AGUA	BASE, WATER PUMP	BASE POMPA ACQUA	BASE DE POMPE A EAU
27	PAF4-03000015	6E0-44323-00	PLACA	OUTER PLATE	PIASTRA	PLAQUE
28	REC6E0-44352-00	6E0-44352-00	IMPULSOR	IMPELLER	GIRANTE	TURBINE
29	REC6E0-44322-02	6E0-44322-02	CASQUILLO INOX	CARTRIDGE INSERT	CAPPUCCIO	INSERT DE POMPE A EAU
30	PAF4-03000018	6E0-44315-A0	JUNTA BOMBA	GASKET	GUARNIZIONE POMPA	JOINT DE POMPE
31	PAF4-03000013	93604-18080	PIN	PIN, DOWEL	SPINOTTO	PIN
32	PAF4-03000019	6E0-44311-00	CUERPO BOMBA	HOUSING, WATER PUMP	CORPO POMPA	CORPS DE POMPE À EAU
33	PAF4-03000021	6E0-44366-00	RETÉN GOMA, BOMBA DE AGUA	RUBBER TUBE, WATER PUMP	TENUTA IN GOMMA, POMPA ACQUA	MANCHON CAOUTCHOUC DE POMPE À EAU
34	PAF4-03000020	6E0-44328-00	PLACA FIJACIÓN BOMBA DE AGUA	PLATE, WATER PUMP FIXED	PLACCA DI FISSAGGIO POMPA ACQUA	PLAQUE FIXATION DE POMPE À EAU
35	PAF4-03000005	90467-08M01	CLIP	CLIP	CLIP	CLIP
36	PAF4-03000016	93604-09066	PIN	PIN, DOWEL	SPINOTTO	PIN
37	REC6E0-45511-01	6E0-45511-01	EJE VERTICAL S	SHAFT, DRIVE S	ASSE VERTICALE S	ARBRE VERTICAL S
	REC6E0-45511-11	6E0-45511-11	EJE VERTICAL L	SHAFT, DRIVE L	ASSE VERTICALE L	ARBRE VERTICAL L



REF	OEM
REC6E0-W0078-A2	6E0-W0078-A2, -00, -01, -02

P. 150



REF	OEM
REC6E0-W0001-C1	6E0-W0001-C1

P. 144



REF
REC80W90U3
REC80W90U6
RECGREU1
RECGREU12

P. 43

2T STROKES 6HP/C/MSH/CMH/CWH/MBK'07/D/DMH/DWH 8HP/C/MSH/MH/CMH/CWH

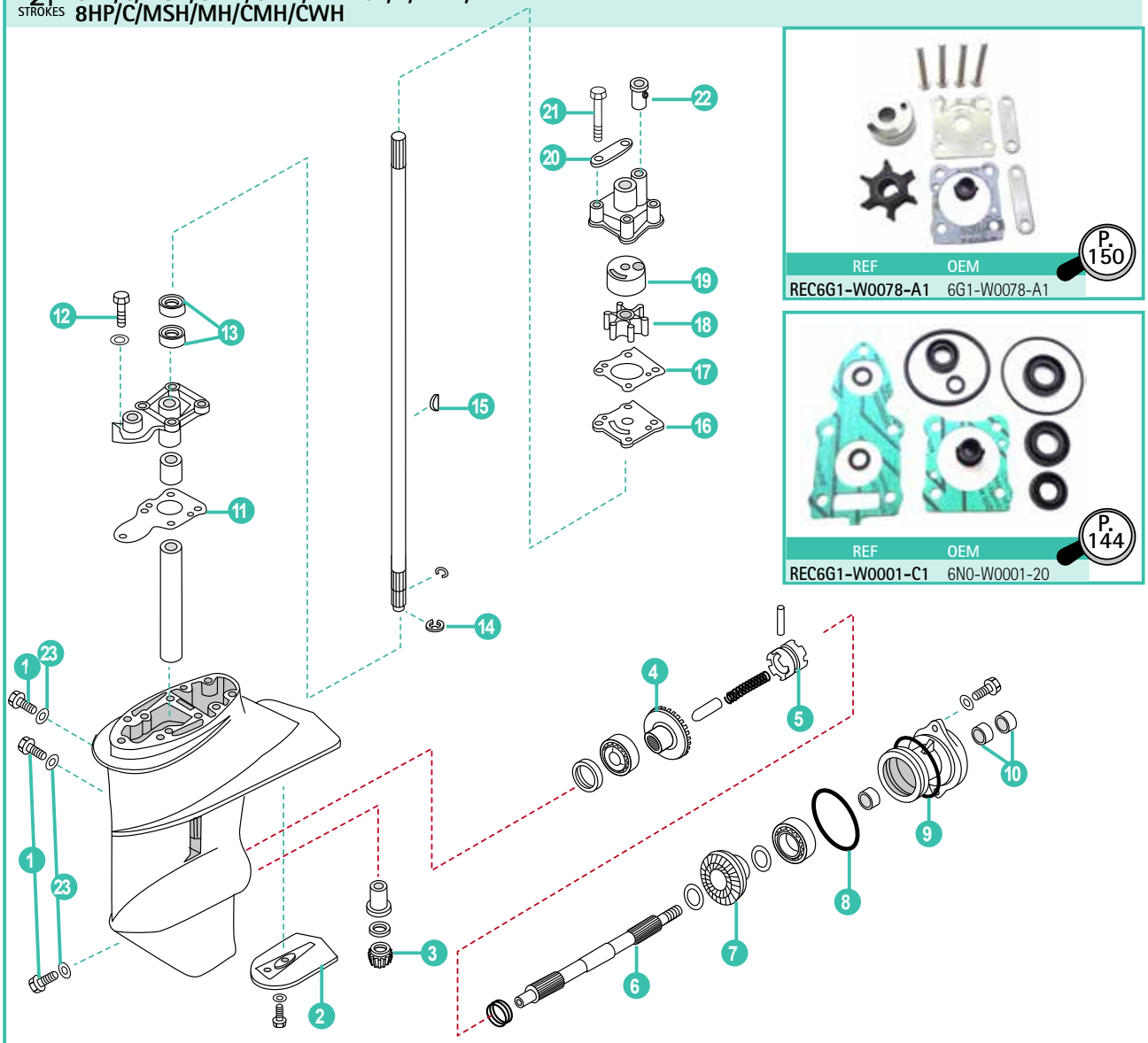

REF REC6G1-W0078-A1 OEM 6G1-W0078-A1

P. 150

REF REC6G1-W0001-C1 OEM 6N0-W0001-20

P. 144

	REF	OEM				
1	REC90340-08002	6E0-45316-09	TAPÓN	PLUG	TAPPO	BOUCHON REMPLISSAGE D'HUILE
2	TEN01118	6N0-G5251-00	ÁNODO	ANODE	ANODO	ANODE
3	REC6N0-G5551-00	6N0-G5551-00	PIÑÓN	PINION	PIGNONE	PIGNON
4	REC6N0-G5560-00	6N0-G5560-00	ENGRANAJE	GEAR	INGRANAGGIO	PIGNON
5	REC6G1-45631-00	6G1-45631-00	EMBRAGUE DE GARRA	CLUTCH, DOG	SELETTORE	CRABOT
6	REC6G1-45611-01	6G1-45611-01	EJE HÉLICE	SHAFT, PROPELLER	ASSE ELICA	ARBRE D'HELICE
7	REC6N0-G5571-00	6N0-G5571-00	PIÑÓN	GEAR	INGRANAGGIO	PIGNON
8	REC93210-49046	93210-49046	ARO TÓRICO	O-RING	O-RING	JOINT TORIQUE
9	REC93210-53M08	93210-53M08	ARO TÓRICO	O-RING	O-RING	JOINT TORIQUE
10	REC93101-15074	93101-15074	RETÉN	OIL SEAL	PARAOLIO	JOINT SPI
11	REC6G1-45315-A0	6G1-45315-A0	JUNTA	PACKING, LOWER CASING	GUARNIZIONE	JOINT
12	PAGB/T5783-M6X30	97095-06030	TORNILLO	BOLT	VITE	VIS
13	REC93101-11M23	93101-11M23	RETÉN	OIL SEAL	PARAOLIO	JOINT SPI
14	REC99001-06600	99001-06600	CERCLIP	CIRCLIP	CIRCLIP	CIRCLIP
15	REC90280-03024	90280-03024	CHAVETA	KEY	CHIAVETTA	CLAVETTE
16	REC6G1-44323-00	6G1-44323-00	PLATO	OUTTER PLATE, CARTRIDGE	PIASTRA	PLAQUE DE POMPE A EAU
17	REC6G1-44315-A0	6G1-44315-A0	JUNTA	GASKET, WATER PUMP	GUARNIZIONE	JOINT
18	REC6G1-44352-00	6G1-44352-00	TURBINA	IMPELLER	GIRANTE	TURBINE
19	REC6G1-44322-00	6G1-44322-00	CASQUILLO	INSERT, CARTRIDGE	GHIERA	INSERT DE POMPE A EAU
20	REC6G1-44328-00	6G1-44328-00	PLACA FIJACIÓN BOMBA DE AGUA	PLATE, WATER PUMP FIXED	PLACCA DI FISSAGGIO POMPA ACQUA	PLAQUE FIXATION DE POMPE À EAU
21	REC97095-06045	97095-06045	TORNILLO	BOLT	VITE	VIS
22	REC647-44366-00	647-44366-00	CASQUILLO GOMA	DAMPER	GHIERA GOMA	BAGUE CAOUTCHOUC
23	REC90430-08020	90430-08020	JUNTA	GASKET	GUARNIZIONE	JOINT

2T STROKES E8D • E8DMH

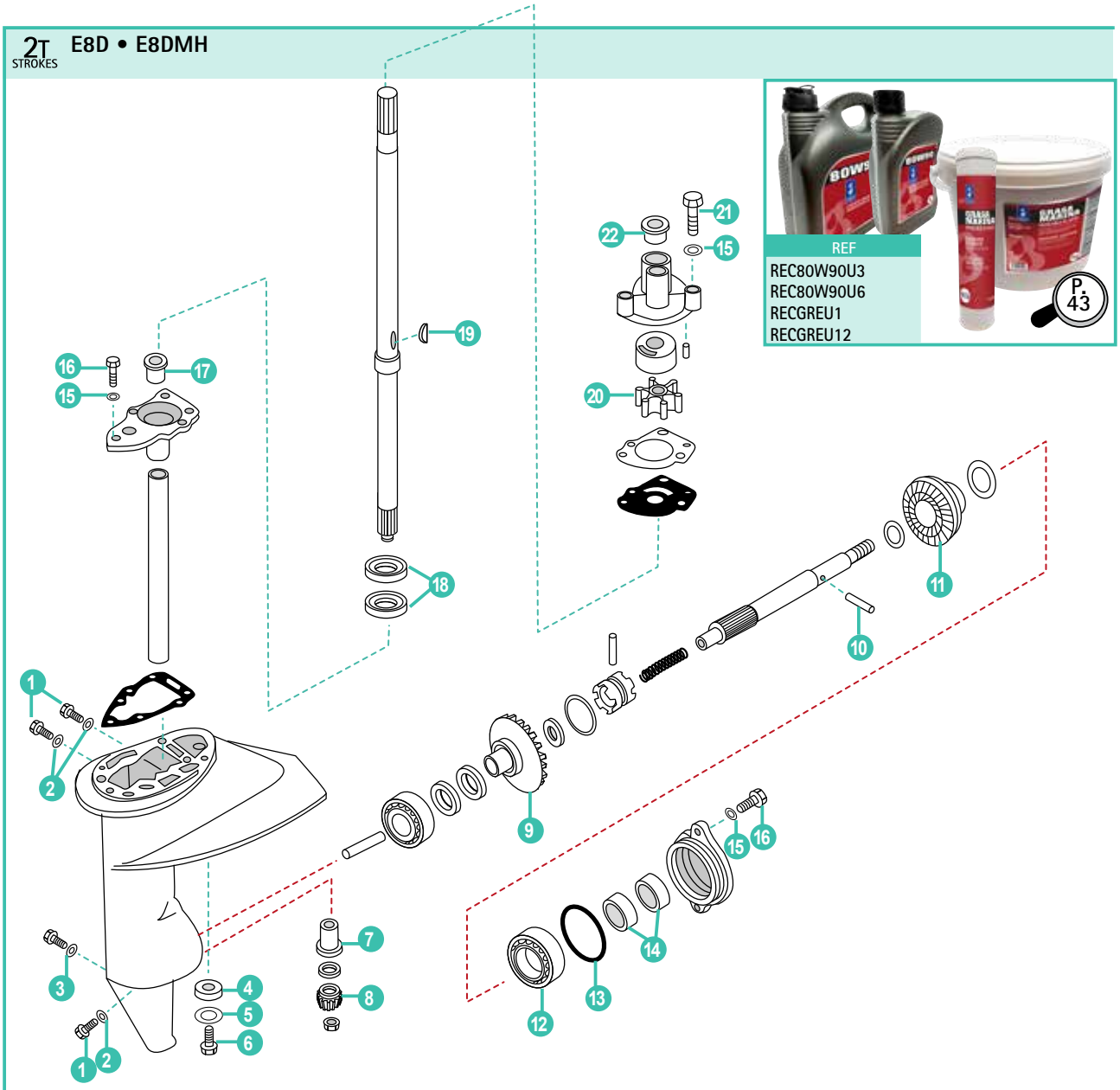

REF
REC80W90U3
REC80W90U6
RECGREU1
RECGREU12

P. 43

	REF	OEM				
1	REC90340-08002	90340-08M04	TORNILLO	BOLT	VITE	VIS
2	REC90430-08020	90430-08020	JUNTA	GASKET	GUARNIZIONE	JOINT
3	REC90430-06M03	90430-06M03	JUNTA	GASKET	GUARNIZIONE	JOINT
4	CM6E0-45251-11	677-45251-00	ÁNODO	ANODE	ANODO	ANODE
5	PAGB/T861.1-87	92990-06300	ARANDELA	WASHER	RONDELLA	RONDELLE
6	PAGB/T5783-M6X35	95895-06012	TORNILLO	BOLT	VITE	VIS
7	REC647-45316-09	647-45316-09	CASQUILLO	DAMPER	GHIERA GOMA	PIN
8	REC647-45551-00	647-45551-00	PIÑÓN	PINION	PIGNONE	PIGNON
9	REC647-45560-00	647-45560-00	ENGRANAJE	GEAR	INGRANAGGIO	PIGNON
10	REC90250-05036	90250-05036	PASADOR	PIN	SPINOTTO	PIN
11	REC647-45570-00	647-45570-01	ENGRANAJE	GEAR	INGRANAGGIO	PIGNON
12	REC93306-00519	93306-00519	COJINETE	BEARING	CUSCINETTO	ROULEMENT
13	REC93210-58677	93210-58677	ARO	O-RING	O-RING	JOINT TORIQUE
14	REC93101-15074	93101-15074	RETÉN ACEITE	OIL SEAL	PARAOLIO	JOINT SPI
15	PAGB/T97.1-6	92990-06600	ARANDELA	WASHER	RONDELLA	RONDELLE
16	PAGB/T5783-M6X20	97095-06020	PERNO	BOLT	VITE	VIS
17	REC647-45316-09	647-45316-09	CASQUILLO	BUSH	GHIERA	BAGUE
18	REC93101-18050	93101-18050	RETÉN ACEITE	OIL SEAL	PARAOLIO	JOINT SPI
19	REC90280-03024	90280-03024	CHAVETA	KEY	CHIAVETTA	CLAVETTE
20	REC662-44352-01	662-44352-01	IMPULSOR	IMPELLER	GIRANTE	TURBINE
21	REC97095-06040	97095-06040	PERNO	BOLT	VITE	VIS
22	REC647-44366-00	647-44366-00	GOMA	RUBER BAND	GOMMA	BAGUE

2T STROKES E9.9D • E15D

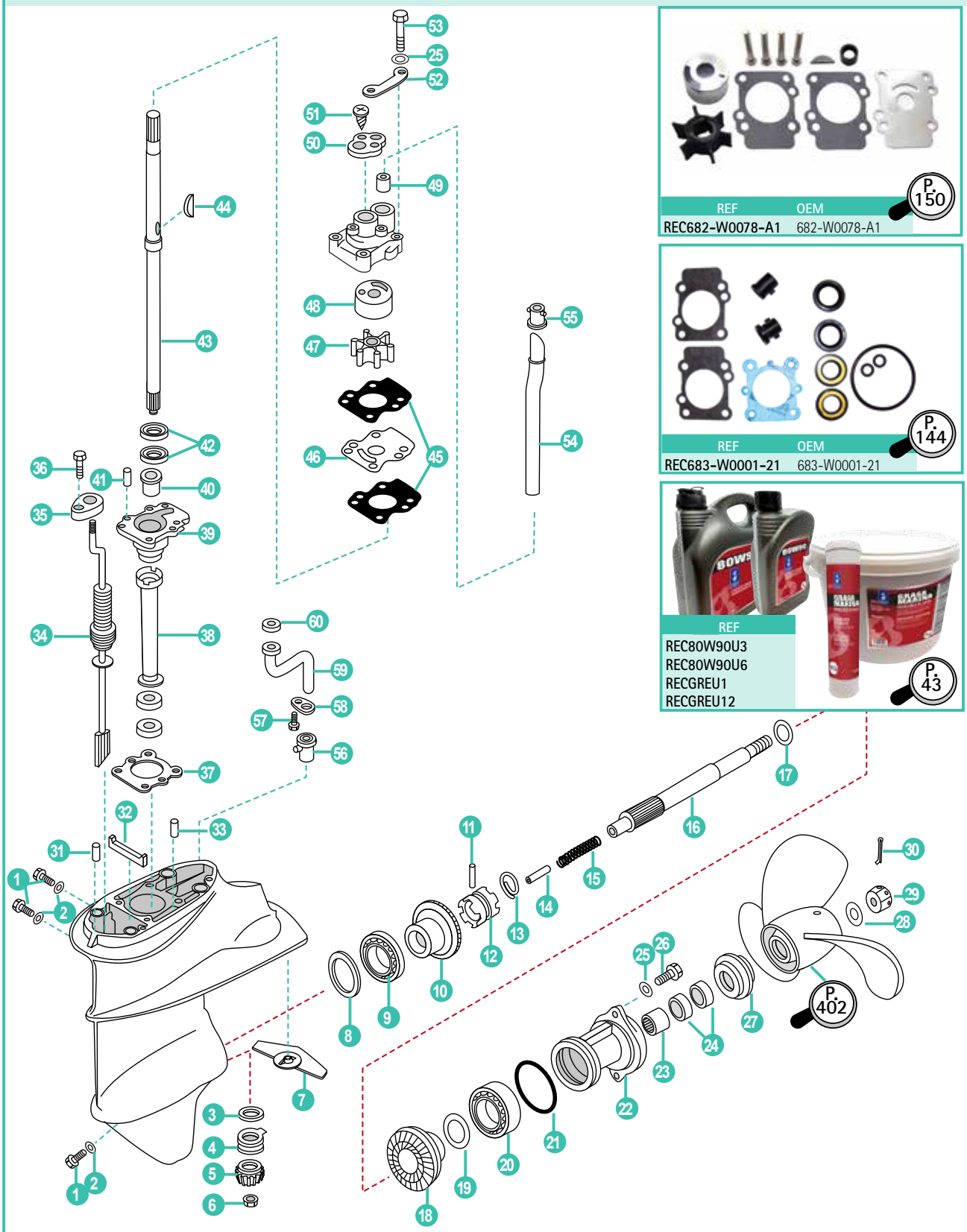

REF	OEM
REC682-W0078-A1	682-W0078-A1

P. 150

REF	OEM
REC683-W0001-21	683-W0001-21

P. 144

REF
REC80W90U3
REC80W90U6
RECGREU1
RECGREU12

P. 43

P. 402

	REF	OEM				
1	REC90340-08002	90340-08014	TAPÓN	PLUG, STRAIGHT SCREW	TAPPO	BOUCHON DE VIDANGE
2	REC90430-08020	90430-08020	JUNTA	GASKET	GUARNIZIONE	JOINT
3	PAF15-06000009	6E7-45587-01-30	GRUESO (1.20mm)	SHIM (1.20mm)	SPESSORE (1.20mm)	CALE (1.20 mm)
4	REC93341-214U1	93341-214U1	RODAMIENTO	BEARING	CUSCINETTO	ROULEMENT
5	REC6E7-45551-00	6E7-45551-00	PIÑÓN	PINION	PIGNONE	PIGNON
6	REC90179-08M06	90179-08M06	TUERCA	NUT	DADO	ÉCROU
7	TEN01116	6B4-45251-00	ÁNODO	ANODE	ANODO	ANODE

	REF	OEM				
	PAF15-06000010-1	664-45567-05	GRUESO (0.05mm)	SHIM (0.05mm)	SPESSORE (0.05mm)	CALE (0.05 mm)
8	PAF15-06000010-2	664-45567-12	GRUESO (0.12mm)	SHIM (0.12mm)	SPESSORE (0.12mm)	CALE (0.12 mm)
	PAF15-06000010-5	664-45567-30	GRUESO (0.30mm)	SHIM (0.30mm)	SPESSORE (0.30mm)	CALE (0.30 mm)
	PAF15-06000010-7	664-4556-50	GRUESO (0.50mm)	SHIM (0.50mm)	SPESSORE (0.50mm)	CALE (0.50 mm)
9	REC93332-00005	93332-00005	RODAMIENTO	BEARING	CUSCINETTO	ROULEMENT
10	REC6E7-45560-01	6E7-45560-00	ENGRANAJE	GEAR	INGRANAGGIO	PIGNON
11	REC90250-05010	90250-05010	PASADOR	PIN, STRAIGHT	SPINOTTO	PIN
12	REC682-45631-00	682-45631-00	EMBRAGUE DE GARRA	CLUTCH, DOG	SELETTORE	CRABOT
13	REC648-45633-00	648-45633-00	ANILLO	RING, CROSS PIN	O-RING	JOINT TORIQUE
14	REC650-45635-00	650-45635-00	PISTÓN	PLUNGER, SHIFT	PISTONE	PISTON
15	PAF15-06070002	90501-14M06	MUELLE	SPRING, COMPRESSION	MOLLA	RESSORT
16	REC683-45611-00	683-45611-00	EJE HÉLICE	SHAFT, PROPELLER	ASSE ELICA	ARBRE D'HELICE
17	REC90201-17682	90201-17682	ARANDELA	WASHER, PLATE	RONDELLA	RONDELLE
18	REC6E7-45570-00	6E7-45571-00	ENGRANAJE	GEAR	INGRANAGGIO	PIGNON
	PAF15-06080006-1	626-45577-00-01	GRUESO (0.10mm)	SHIM (0.10mm)	SPESSORE (0.10mm)	CALE (0.10 mm)
19	PAF15-06080006-3	626-45577-00-03	GRUESO (0.30mm)	SHIM (0.30mm)	SPESSORE (0.30mm)	CALE (0.30 mm)
	PAF15-06080006-5	626-45577-00-05	GRUESO (0.50mm)	SHIM (0.50mm)	SPESSORE (0.50mm)	CALE (0.50 mm)
20	REC93306-00501	93306-00501	RODAMIENTO	BEARING	CUSCINETTO	ROULEMENT
21	REC93210-57M09	93210-57M09	ARO TÓRICO	O-RING	O-RING	JOINT TORIQUE
22	REC683-45361-01-4D	683-45361-00-EJ	DIÁBOLO	CAP, LOWER CASING	COP. CASSA INGRANAGGI	DIABOLO
23	REC93315-317U2	93315-317U2	RODAMIENTO	BEARING	CUSCINETTO	ROULEMENT
24	REC93101-17054	93101-17054	RETÉN	OIL SEAL	PARAOLIO	JOINT SPI
25	PAGB/T97.1-6	92990-06600	ARANDELA	WASHER, PLATE	RONDELLA	RONDELLE
26	PAGB/T5783-M6X20	97395-06020	TORNILLO	BOLT	VITE	VIS
27	REC6E7-45987-00	6E7-45987-00	ESPACIADOR	SPACER	DISTANZIALE	ENTRETOISE
28	PAGB/T96-10	90201-10M01	SEPARADOR	SPACER	DISTANZIALE	CALE
29	PAF15-06000016	90171-10M01	TUERCA HÉLICE	NUT, CASTLE	DADO ELICA	ÉCROU
30	PAGB/T91-2.5X20	91490-30020	PASADOR ALETAS	PIN, COTTER	PIN ELICA	CLAVETTE
31	REC93606-12019	93606-12019	PIN	PIN	SPINOTTO	PIN
32	REC682-45376-01	682-45376-01	GUÍA RETÉN	GUIDE, SEAL DAMPER	GUIDA BOCCOLA	GUIDE
33	PAF25-04000007	93604-08062	PIN	PIN, DOWEL	SPINOTTO	PIN
34	REC682-44147-00	682-44147-00	TAPÓN GUÍA	BOOT, SHIFT ROD	TAPPO GUIDA	GUIDE
35	REC682-44176-00	682-44176-00	SOPORTE	BRACKET	SUPPORTO	SUPPORT
36	PAGB/T845-ST4.8X9	97780-50510	TORNILLO	SCREW	VITE	VIS
37	REC683-45315-A0	683-45315-00	JUNTA	PACKING, LOWER CASING	GUARNIZIONE	JOINT
38	REC6E7-45536-00	6E7-45536-00	CAMISA EJE	SLEEVE, DRIVE SHAFT	TUBO GUIDA	TUBE GUIDE
39	REC6E7-45331-00-CA	6E7-45331-00-9M	CUERPO DE RODAMIENTO	HOUSING, BEARING	CUSCINETTO	LOGEMENT
40	REC626-45316-09	626-45316-09	CASQUILLO	BUSHING, DRIVE SHAFT	GHIERA	BAGUE
41	REC93606-12019	93606-12019	PIN	PIN, DOWEL	SPINOTTO	PIN
42	REC93101-20048	93101-20048	RETÉN	OIL SEAL	PARAOLIO	JOINT SPI
43	REC6E7-45501-00	6E7-45501-00	EJE	DRIVE SHAFT COMP.	ASSE VERTICALE	ARBRE VERTICAL
	REC6E7-45501-11	6E7-45501-10	EJE	DRIVE SHAFT COMP.	ASSE VERTICALE	ARBRE VERTICAL
44	REC90280-03024	90280-03024	CHAVETA	KEY, WOODRUFF	CHIAVETTA	CLAVETTE
45	REC682-44315-00	682-44315-00	JUNTA	GASKET, WATER PUMP	GUARNIZIONE	JOINT
46	REC682-44323-40	682-44323-00	PLATO	OUTER PLATE, CARTRIDGE	PIASTRA	PLAQUE DE POMPE A EAU
47	REC682-44352-01	682-44352-00	TURBINA	IMPELLER	GIRANTE	TURBINE
48	REC682-44322-00	682-44322-00	CASQUILLO INOX.	INSERT, CARTRIDGE	GHIERA INOX.	INSERT DE POMPE A EAU
49	REC682-44365-00	682-44365-00	CASQUILLO GOMA	DAMPER, WATER SEAL	GHIERA GOMA	BAGUE
50	REC682-44312-00	682-44312-00	TAPA CUERPO BOMBA AGUA	COVER, WATER PUMP HOUSING	COPERCHIO CORPO ACQUA	CORPS DE POMPE A EAU
51	PAGB/T845-ST4.2X16	97780-40112	TORNILLO	SCREW, TAPPING	VITE	VIS
52	REC682-44328-00	682-44328-00	PLATO	PLATE	PIASTRA	PLAQUE
53	PAGB/T5782-M6X45	947395-06040	TORNILLO	BOLT	VITE	VIS
54	REC682-44361-01	682-44361-01	TUBO DE AGUA S		TUBO ACQUA S	TUBE D'EAU S
	REC682-44361-10	682-44361-10	TUBO DE AGUA L		TUBO ACQUA L	TUBE D'EAU L
55	REC626-44365-01	626-44365-01	RETÉN	SEAL	PARAOLIO	JOINT SPI
56	REC6E7-44366-00	6E7-44366-00	CASQUILLO GOMA	WATER SEAL	BOCCOLA GOMMA	GUIDE CAOUTCHOUC
57	PAGB/T5783-M6X10	97095-06010	TORNILLO	BOLT	VITE	VIS
58	REC683-44373-00	683-44373-00	PLACA FIJACION TUBO	PLATE WATER TUBE	PLACCA SUPPORTO TUBO	PLAQUE DE FIXATION DE TUBE
59	REC683-44362-01	683-44361-01	TUBO DE AGUA	TEATER TUBE "B"	TUBO ACQUA	TUBE D'EAU
60	REC683-44365-01	683-44365-01	CASQUILLO GOMA	SEAL WATER TUBE	BOCCOLA GOMMA	GUIDE CAOUTCHOUC

2T STROKES 9.9C/F/FMH/MSH/MH/MHH • 13.5AMH • 15FE/FMH/F/MSH/MH • E15C

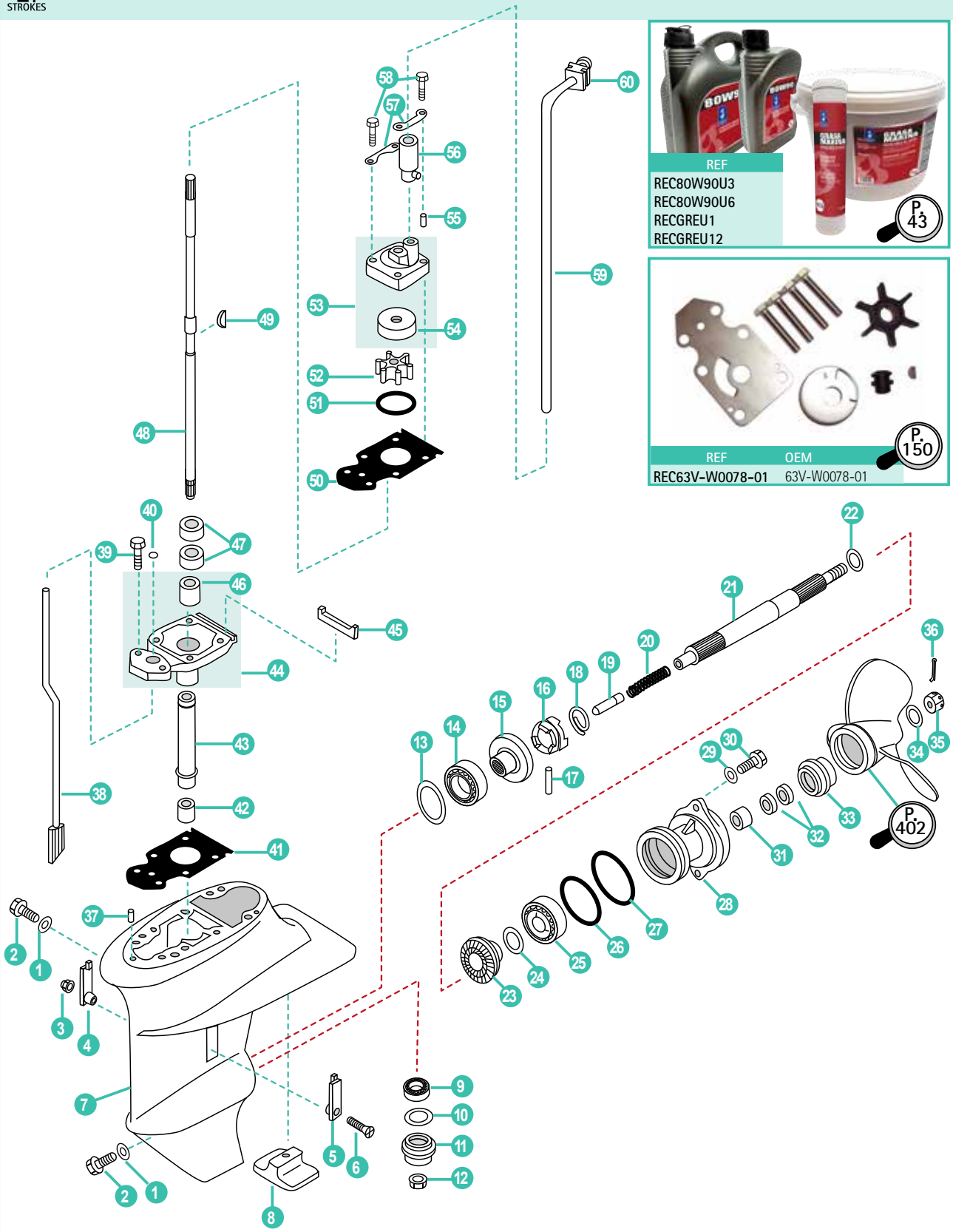

REF
REC80W90U3
REC80W90U6
RECGREU1
RECGREU12

P. 43

REF	OEM
REC63V-W0078-01	63V-W0078-01

P. 150

P. 402

	REF	OEM				
1	REC90430-08020	90430-08020	ARANDELA	WASHER	RONDELLA	RONDELLE
2	REC90340-08002	90340-08002	TAPÓN ACEITE	PLUG, OIL	TAPPO OLIO	BOUCHON REMPLISSAGE D'HUILE
3	PAGB/T6182-M5	90185-05002	TUERCA	LOCK NUT	DADO	ÉCROU
4	PAF15-06000002	63V-45215-00	CUBIERA ENTRADA DE AGUA A	WATER INLET A	COPERCHIO ENTRATA ACQUA A	GRILLE D'ENTRÉE D'EAU A
5	PAF15-06000003	6G1-45214-00	CUBIERA ENTRADA DE AGUA B	WATER INLET B	COPERCHIO ENTRATA ACQUA B	GRILLE D'ENTRÉE D'EAU B
6	PAGB/T820-M5X25	90152-05M04	TORNILLO	SCREW	VITE	VIS

	REF	OEM				
7	PAF15-06000001	63V-45311-01-4D	CARTER	CASTING, LOWER	CARTER	CARTER D'EMBASE
8	CM61N-45251-01	61N-45251-01	ÁNODO	ANODE	ANODO	ANODE
9	REC93341-41414	93341-41414	RODAMIENTO	BEARING	CUSCINETTO	ROULEMENT
10	PAF15-06000008	6E8-45587-10-13	GRUESO (1.13 mm)	SHIM (1.13mm)	SPESSORE (1.13 mm)	CALE (1.13 mm)
11	REC63V-45551-00	63V-45551-00	PIÑÓN	GEAR UNIT ASSY	PIGNONE	PIGNON
12	REC90179-08M06	90179-08M06	TUERCA	LOCK NUT	DADO	ÉCROU
13	PAF15-06000010-1	664-45567-01-10	GRUESO	SHIM	SPESSORE	CALE
14	REC93332-00005	93332-00005	COJINETE	BEARING	CUSCINETTO	ROULEMENT
15	REC6E7-45560-01	6E7-45560-01	PIÑÓN	GEAR UNIT ASSY	PIGNONE	PIGNON
16	REC682-45631-00	682-45631-00	SELECTOR	CLUTCH BLOCK	SELETTORE	CRABOT
17	REC90250-05010	90250-05010	PASADOR	PIN	SPINOTTO	PIN
18	REC648-45633-00	648-45633-00	MUELLE SELECTOR	RING, CROSS PIN	MOLLA SELETTORE	RESSORT
19	REC650-45635-00	650-45635-00	ÉMBOLO	PLUNGER	BULLONE	PISTON
20	PAF15-06070002	90501-14M06	MUELLE	SPRING	MOLLA	RESSORT
21	REC683-45611-00	683-45611-00	EJE HÉLICE	PROPELLER SHAFT	ASSE ELICA	ARBRE D'HELICE
22	REC90201-17682	90201-17682	ARANDELA	WASHER	RONDELLA	RONDELLE
23	REC6E7-45570-00	6E7-45571-00	PIÑÓN	GEAR UNIT ASSY	PIGNONE	PIGNON
24	PAF15-06080006-1	626-45577-00	GRUESO	SHIM	SPESSORE	CALE
25	REC93306-00501	93306-00501	RODAMIENTO	BEARING (B6005)	CUSCINETTO	ROULEMENT
26	REC93210-57M09	93210-57M09	TÓRICA	O-RING	O-RING	JOINT TORIQUE
27	PAF15-06080003	93210-56M80	TÓRICA	O-RING	O-RING	JOINT TORIQUE
28	REC683-45361-01-4D	683-45361-02-4D	DIÁBOLO	CAP, LOWER CASING	COPERCHIO CARTER INFERIORE	DIABOLO
29	PAGB/T97.1-6	92995-06600	ARANDELA	WASHER	RONDELLA	RONDELLE
30	PAGB/T5783-M6X20	97095-06020	TORNILLO	SCREW	VITE	VIS
31	REC93315-317U2	93315-317U2	COJINETE	BEARING	CUSCINETTO	ROULEMENT
32	REC93101-17054	93101-17054	RETÉN DE ACEITE	OIL SEAL	PARAOLIO	JOINT SPI
33	PAF15-06000015	6E7-45987-01	ESPACIADOR	SPACER	DISTANZIALE	ENTRETOISE
34	REC6E7-45987-00	6E7-45987-01	SEPARADOR	SPACER	DISTANZIALE	ENTRETOISE
35	REC90171-10M01	90171-10M01	TUERCA HÉLICE	NUT, CASTLE	DADO ELICA	ÉCROU
36	REC91490-30025	91490-30020	PASADOR ALETAS	PIN, COTTER	PIN ELICA	CLAVETTE
37	PAF15-00000013	93604-10M03	PIN	PIN	SPINOTTO	PIN
38	PAF15-06030000S	63V-44150-00	EJE SELECTOR S	SHIFT CAM ASSY S	ASSE SELETTORE S	ARBRE SELECTEUR S
	PAF15-06030000L	63V-44150-10	EJE SELECTOR L	SHIFT CAM ASSY L	ASSE SELETTORE L	ARBRE SELECTEUR L
39	PAGB/T5783-M8X25	97080-08025	TORNILLO	SCREW	VITE	VIS
40	REC93210-06ME6	93210-06ME6	TÓRICA	O-RING	O-RING	JOINT TORIQUE
41	REC63V-45315-A0	63V-45315-A0	JUNTA	GASKET	GUANIZIONE	JOINT
42	REC93315-314V8	93315-314V8	COJINETE	BEARING	CUSCINETTO	PALIER
43	PAF15-06000006	63V-45536-00	TUBO GUÍA	SLEEVE, DRIVE SHAFT	TUBO GUIDA	TUBE
44	REC63V-45331-00-5B	63V-45331-00-5B	CUERPO DEL COJINETE	SHELL, BEARING	CORPO DE CUSCINETTO	LOGEMENT DE PALIER
45	PAF15-06020005	63V-45375-00	GOMA	SEAL	GOMMA	TAMPON
46	REC626-45316-09	90381-14020	CASQUILLO	BUSH, SOLID	BOCCOLA	BAGUE
47	REC93101-20048	93101-20048	RETÉN DE ACEITE	OIL SEAL	PARAOLIO	JOINT SPI
48	REC63V-45510-01	63V-45510-01	EJE VERTICAL S	DRIVE SHAFT ASSY S	ASSE VERTICALE S	ARBRE VERTICAL S
	REC63V-45510-11	63V-45510-11	EJE VERTICAL L	DRIVE SHAFT ASSY L	ASSE VERTICALE L	ARBRE VERTICAL L
49	REC664-44338-00	63V-44338-00	CHAVETA	KEY, WOODRUFF	CHIAVETTA	CLAVETTE
50	REC63V-44323-00	63V-44323-00	JUNTA TAPA BOMBA AGUA	GASKET, WATER PUMP COVER	GUARNIZIONE COPERCHIO	JOINT COUVERCLE
51	PAJASOF404-31-045	93210-44398	ARO TÓRICO	O-RING	O-RING	JOINT TORIQUE
52	REC63V-44352-01	63V-44352-01	TURBINA	IMPELLER	GIRANTE	TURBINE
53	REC63V-44301-00	63V-44301-00	CUERPO DE BOMBA	PUMP HOUSING	CORPO POMPA	CORPS DE POMPE A EAU
54	REC63V-44322-00	63V-44322-00	TAPA, BOMBA AGUA	COVER, INNER WATER PUMP	COPERCHIO, POMPE ACQUA	INSERT DE POMPE A EAU
55	PAF15-00000013	93604-12M07	PASADOR	PIN	SPINOTTO	PIN
56	REC647-44366-00	647-44366-00	TUBO GOMA BOMBA AGUA	RUBBER TUBE, WATER PUMP	TUBO IN GOMMA, POMPA	DURITE DE COUTCHOUC
57	PAF15-06000014	63V-44328-00	PLACA	OUT PLATE	PIASTRA	PLAQUE
58	REC97080-08045	97080-08045	PERNO	STUD	BULLONE	BOULON
59	REC63V-44361-01	63V-44361-01	TUBO DE AGUA S	WATER TUBE S	TUBO DELL'ACQUA S	DURITE D'EAU S
	REC63V-44361-11	63V-44361-11	TUBO DE AGUA	WATER TUBE	TUBO DELL'ACQUA	DURITE D'EAU
60	PAF15-02000006	63V-44365-10	GOMA DEL TUBO DE AGUA	I-SHAPED RUBBER BAND	GOMMA TUBO ACQUA	PLOT CAOUTCHOUC DE TUBE D'EAU

2T STROKES 20C/CM • 25 D/DE • C25HP • 30A • C30

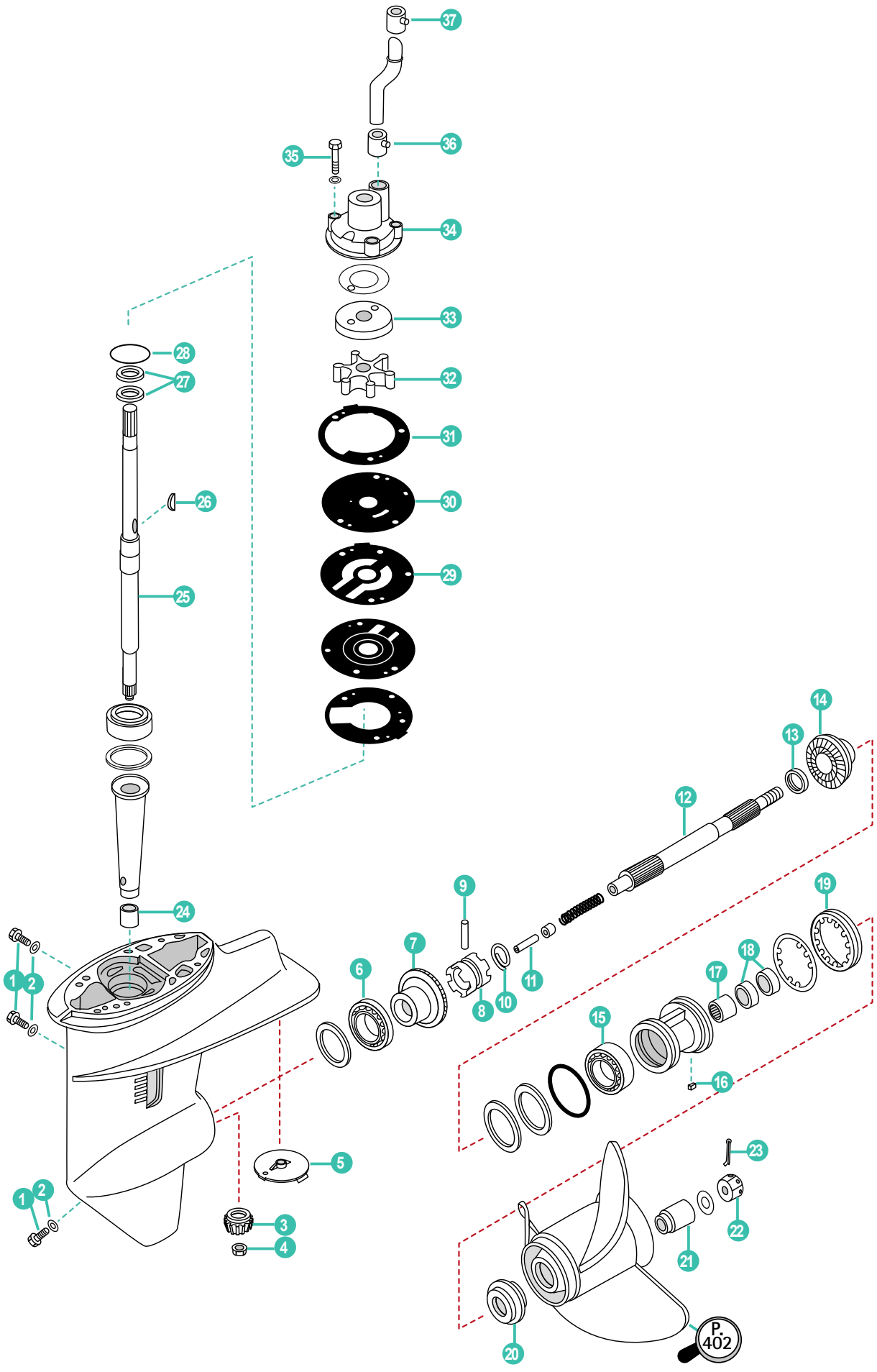

	REF	OEM				
1	REC90340-08002	90340-08002	TAPÓN ACEITE	PLUG, OIL	TAPPO OLIO	BOUCHON REMPLISSAGE D'HUILE
2	REC90430-08020	90430-08020	ARANDELA	WASHER	RONDELLA	RONDELLE
3	REC689-45551-00	689-45551-00	PIÑÓN	GEAR	PIGNONE	PIGNON
4	REC90179-09M02	90179-09M02	TUERCA, PIÑÓN	NUT	DADO	ÉCROU
5	CM664-45371-01	664-45371-01-00	ÁNODO	ANODE	ANODO	ANODE
6	REC93332-00005	93332-00005	COJINETE	BEARING	CUSCINETTO	ROULEMENT
7	REC689-45560-00	689-45560-00	PIÑÓN	GEAR	PIGNONE	PIGNON
8	REC664-45631-01	664-45631-01	SELECTOR	CLUTCH	SELETTORE	CRABOT
9	REC90250-05010	90250-05010	PASADOR	PIN	SPINOTTO	LEVIER
10	REC648-45633-00	648-45633-00	ARO, PASADOR	CROSS PIN	O-RING	JOINT TORIQUE
11	REC648-45635-00	648-45635-00	PIVOTE	PIN	PERNO	ARBRE
12	REC689-45611-00	689-45611-00	EJE HÉLICE	SHAFT PROPELLER	ASSE ELICA	ARBRE D'HELICE
13	REC90201-20417	90201-20417	ARANDELA	WASHER	RONDELLA	RONDELLE
14	REC689-45571-00-00	689-45570-00	PIÑÓN MARCHA ATRÁS	GEAR R.V	PIGNONE MARCIA INDIETRO	PIGNON MARCHE ARRIERE
15	REC93306-00612	93306-00612	COJINETE	BEARING	CUSCINETTO	ROULEMENT
16	REC90282-04010	90282-04010	CHAVETA	KEY	CHIAVETTA	CLAVETTE
17	REC93315-22004	93315-22004	COJINETE	BEARING	CUSCINETTO	ROULEMENT
18	REC93101-20M07	93101-20M07	RETÉN	OIL SEAL	PARAOLIO	JOINT D'HUILE
19	REC664-45384-00	664-45384-00	TUERCA	NUT	DADO	ÉCROU
20	REC664-45987-00	664-45987-00	ESPACIADOR	SPACER	DISTANZIALE	CALE
21	REC689-45997-00	689-45997-00	ESPACIADOR	SAPCER	DISTANZIALE	CALE
22	REC90171-14013-00	90171-14013	TUERCA HÉLICE	NUT	DADO	ÉCROU
23	REC91490-30030	91490-30030	PASADOR	COTTER PIN	PIN	PIN
24	REC93315-017U4	93315-017U4	COJINETE, PIÑÓN	BEARING	CUSCINETTO	ROULEMENT
25	REC689-45501-10	689-45501-10	EJE L	DRIVE SHAFT L	ASSE VERTICALE L	ARBRE VERTICAL L
26	REC664-44338-00	664-44338-00	CUÑA	CHAVETA	KEY	CHIAVETTA
27	REC93101-22067	93101-22067	RETÉN ACEITE	OIL SEAL	PARAOLIO	JOINT SPI
28	REC689-44315-A0	689-44315-A0	JUNTA BASE	GASKET	GUARNIZIONE	JOINT
29	REC689-44316-A0	689-44316-A0	JUNTA BASE	GASKET	GUARNIZIONE	JOINT
30	REC689-44323-00	689-44323-03	CHAPA	PLATE	PIASTRA	PLAQUE
31	REC689-44324-A0	689-44324-A0	JUNTA, CHAPA	GASKET	GUARNIZIONE	JOINT
32	REC689-44352-02	689-44352-02	IMPULSOR	IMPELLER	GIRANTE	TURBINE
33	REC689-W4432-01	689-W4432-02	ACOPLE	INSERT CUP	ACCOPPIAMENTO	INSERT DE POMPE A EAU
34	REC689-44311-00	689-44311-03	CUERPO BOMBA AGUA	HOUSING W.P.	CORPO POMPA ACQUA	CORPS DE POMPE
35	REC90101-06M56	90101-06M56	TORNILLO CUERPO BOMBA	BOLT	VITE	VIS
36	REC626-44365-01	626-44365-01	RETÉN SUPERIOR TUBO DE AGUA	DUMPER WATER TUBE	PARAOLIO SUPERIORE TUBO ACQUA	BAGUE TUBE D'EAU
37	REC689-44366-00	689-44366-00	RETÉN SUPERIOR TUBO DE AGUA	DUMPER WATER TUBE	PARAOLIO SUPERIORE TUBO ACQUA	BAGUE TUBE D'EAU

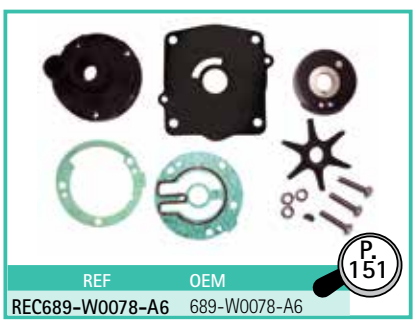

REF	OEM
REC689-W0078-A6	689-W0078-A6

P. 151

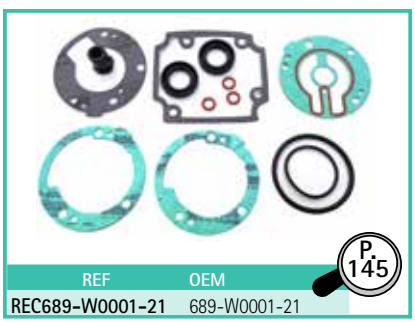

REF	OEM
REC689-W0001-21	689-W0001-21

P. 145



REF
REC80W90U3
REC80W90U6
RECGREU1
RECGREU12

P. 43

2T STROKES 25B/BMH/BWH • E25A/25VE/VM • 30H/HMH/HWC • 30G/GE

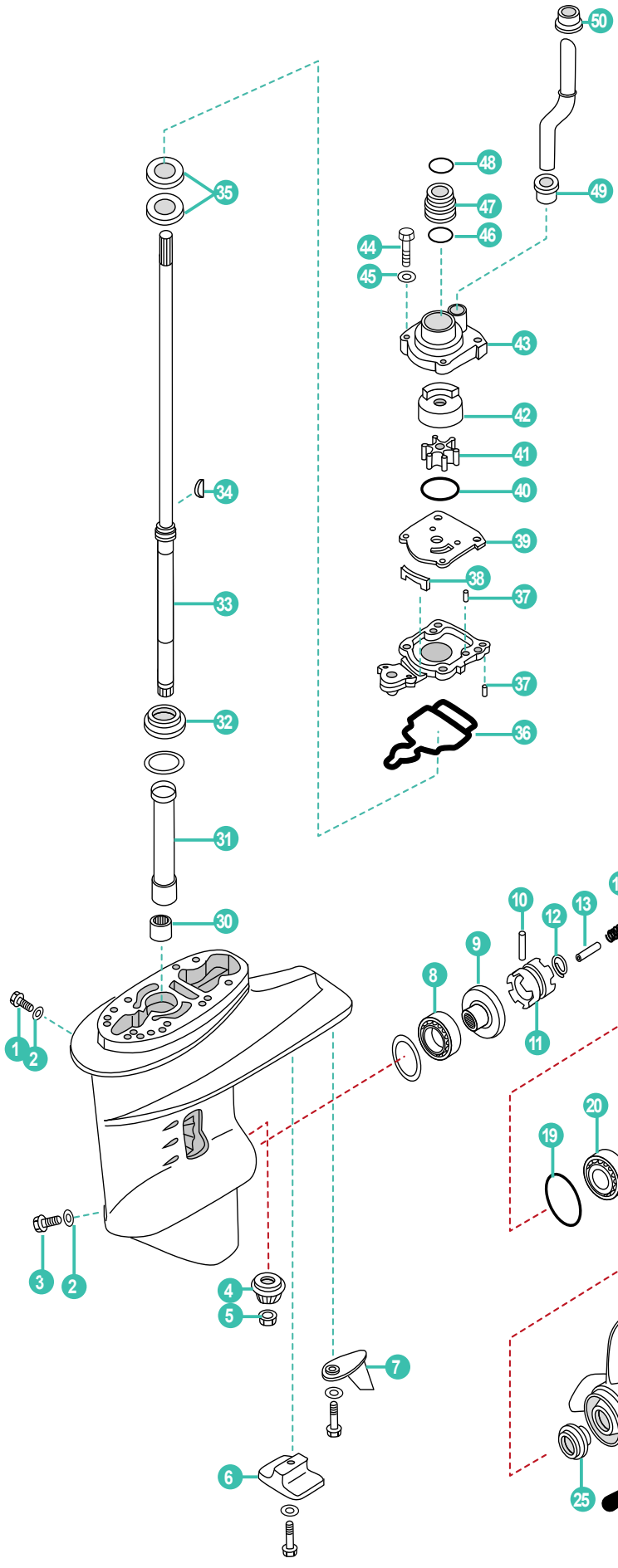

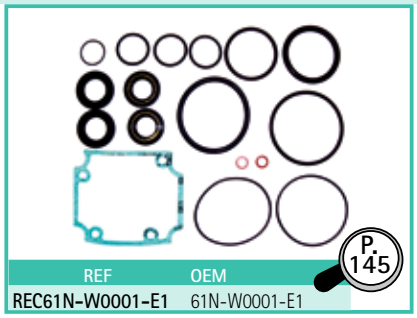

REF	OEM
REC61N-W0001-E1	61N-W0001-E1

P. 145

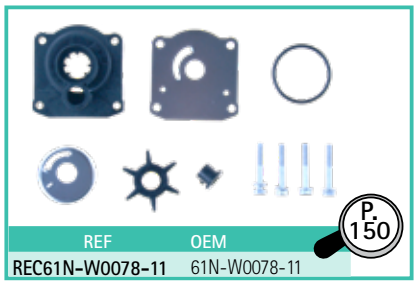

REF	OEM
REC61N-W0078-11	61N-W0078-11

P. 150



REF
REC80W90U3
REC80W90U6
RECGREU1
RECGREU12

P. 43

P. 402

RECAMBIOS MARINOS

	REF	OEM				
1	REC90340-08002	90340-08002	TAPÓN	PLUG, STRAIGHT SCREW	TAPPO	BOUCHON
2	REC90430-08020	90430-08020	JUNTA	GASKET	GUARNIZIONE	JOINT
3	REC688-45341-00	688-45341-10	TAPÓN VACIADO	PLUG, DRAIN	TAPPO	BOUCHON
4	REC61N-45551-00	61N-45551-00	ENGRANAJE	PINION	PIGNONE	PIGNON
5	REC90179-10M14	90179-10M14	TUERCA	NUT	DADO	ÉCROU
6	CM61N-45251-01	61N-45251-01	ÁNODO	ANODE	ANODO	ANODE
7	TEN01130	61N-45371-00	ÁNODO ZINC	TAB-TRIM	ANODO ZINCO	ANODE
8	REC93332-00005	93332-00005	RODAMIENTO	BEARING	CUSCINETTO	ROULEMENT
9	REC61N-45560-10	61N-45560-10	ENGRANAJE	GEAR	INGRANAGGIO	PIGNON
10	REC90250-05010	90250-05010	PASADOR	PIN, STRAIGHT	SPINOTTO	PIN
11	REC664-45631-00	664-45631-02	DEAPLAZABLE	CLUTCH, DOG	SCORREVOLE	CRABOT
12	REC648-45633-00	648-45633-00	MUELLE	RING, CROSS PIN	MOLLA	RESSORT
13	REC648-45635-00	648-45635-00	BULÓN	PLUNGER, SHIFT	BULLONE	BOULON
14	PAF25-04060002	90501-10065	MUELLE COMPRESIÓN	SPRING, COMPRESSION	MOLLA	RESSORT
15	REC6L2-45611-00	6L2-45611-00	EJE HÉLICE	SHAFT, PROPELLER	ASSE ELICA	ARBRE D'HELICE
16	REC90201-20417	90201-20417	ARANDELA	WASHER, PLATE	RONDELLA	RONDELLE
17	REC61N-45570-00	61N-45571-00	ENGRANAJE	GEAR	INGRANAGGIO	PIGNON
18	PAF25-04070005-1	6L2-45577-00-10	GRUESO (1.0 mm)	SHIM (t:1.0mm)	SPESSORE (1.0 mm)	CALE (1.0 mm)
19	REC93210-64ME7	93210-64ME7	ARO TÓRICO	O-RING	O-RING	JOIN TORIQUE
20	REC93306-00612	93306-00612	RODAMIENTO	BEARING	CUSCINETTO	ROULEMENT
21	PAF25-04070001	61N-45361-01-4D	DIÁBOLO	CAP, LOWER CASING	COP. CASSA INGRANAGGI	DIAVOLO
22	REC93315-22004	93315-22004	RODAMIENTO	BEARING	CUSCINETTO	ROULEMENT
23	REC93101-20M07	93101-20M07	RETÉN	OIL SEAL	PARAOLIO	JOINT SPI
24	REC93210-65M50	93210-65M50	ARO TÓRICO	O-RING	O-RING	JOINT TORIQUE
25	REC6L2-45987-00	6L2-45987-01	SEPARADOR	SPACER	DISTANZIALE	CALE
26	REC689-45997-00	689-45997-00	SEPARADOR	SPACER	DISTANZIALE	CALE
27	PAGB/T97.1-14	92990-14200	ARANDELA	WASHER, PLAIN	RONDELLA	RONDELLE
28	REC90171-14013-00	90171-14013	TUERCA	NUT, CASTLE	DADO	ÉCROU
29	PAGB/T91-1.6x12	91490-30022	PASADOR	PIN	SPINOTTO	PIN
30	REC93315-220V7	93315-220V7	RODAMIENTO	BEARING	CUSCINETTO	ROULEMENT
31	PAF25-04000002	61N-45536-00	TUBO GUÍA	SLEEVE, DRIVE SHAFT	TUBO GUIDA	TUBE GUIDE
32	REC93332-000W5	93332-000WS	RODAMIENTO	BEARING	CUSCINETTO	ROULEMENT
33	REC61N-45510-00	61N-45510-00	EJE VERTICAL	DRIVE SHAFT ASSY	ASSE VERTICALE	ARBRE VERTICAL
	REC61N-45510-10	61N-45510-10	EJE VERTICAL	DRIVE SHAFT ASSY	ASSE VERTICALE	ARBRE VERTICAL
34	REC90280-03M03	90280-03M03	CHAVETA	KEY, WOODRUFF	CHIAVETTA	CLAVETTE
35	REC93101-22067	93101-22067	RETÉN	OIL SEAL	PARAOLIO	JOINT SPI
36	PAF25-04000009	61N-45315-00	JUNTA	PACKING, LOWER CASING	GUARNIZIONE	JOINT
37	PAF25-04000007	93604-10M03	PIN CENTRADO	PIN, DOWEL	SPINOTTO	PIN
38	PAF25-04000013	61N-45127-00	RETÉN	SEAL	PARAOLIO	JOINT SPI
39	REC61N-44323-00	61N-44323-00	PLATO BOMBA AGUA	OUTTER PLATE, CARTRIDGE	PIASTRA POMPA ACQUA	PLAQUE
40	PAF25-04050003	93210-45161	ARO TÓRICO	O-RING	O-RING	JOINT TORIQUE
41	REC6H4-44352-02	6H4-44352-02	TURBINA	IMPELLER	GIRANTE	TURBINE
42	REC61N-44322-00	61N-44322-01	CASQUILLO INOX.	INSERT, CARTRIDGE	BOCCOLA INOX.	INSERT DE POMPE A EAU
43	PAF25-04050001	61N-44311-01	CUERPO BOMBA	HOUSING, WATER PUMP	CORPO POMPA	CORPS DE POMPE A EAU
44	REC97095-06040	97095-06040	TORNILLO	BOLT	VITE	VIS
45	PAGB/T97.1-6	92995-06600	ARANDELA	WASHER	RONDELLA	RONDELLE
46	PAGB/T3452.1-25.8X2	93210-26130	ARO TÓRICO	O-RING	O-RING	JOINT TORIQUE
47	PAF25-04000017S	61N-44362-00	TUBO AGUA S	S WATER TUBE	TUBO ACQUA S	TUBE D'EAU S
	PAF25-04000017	61N-44362-10	TUBO AGUA L	L WATER TUBE	TUBO ACQUA L	TUBE D'EAU L
48	PAGB/T3452.1-25.8X2	93210-22164	ARO TÓRICO	O-RING	O-RING	JOINT TORIQUE
49	PAF25-04050004	6L2-44367-00	CASQUILLO	DAMPER WATER PIPE	BOCCOLA.	BAGUE TUBE D'EAU
50	REC689-44366-00	689-44366-00	CASQUILLO	DAMPER, WATER SEAL	BOCCOLA	BAGUE TUBE D'EAU

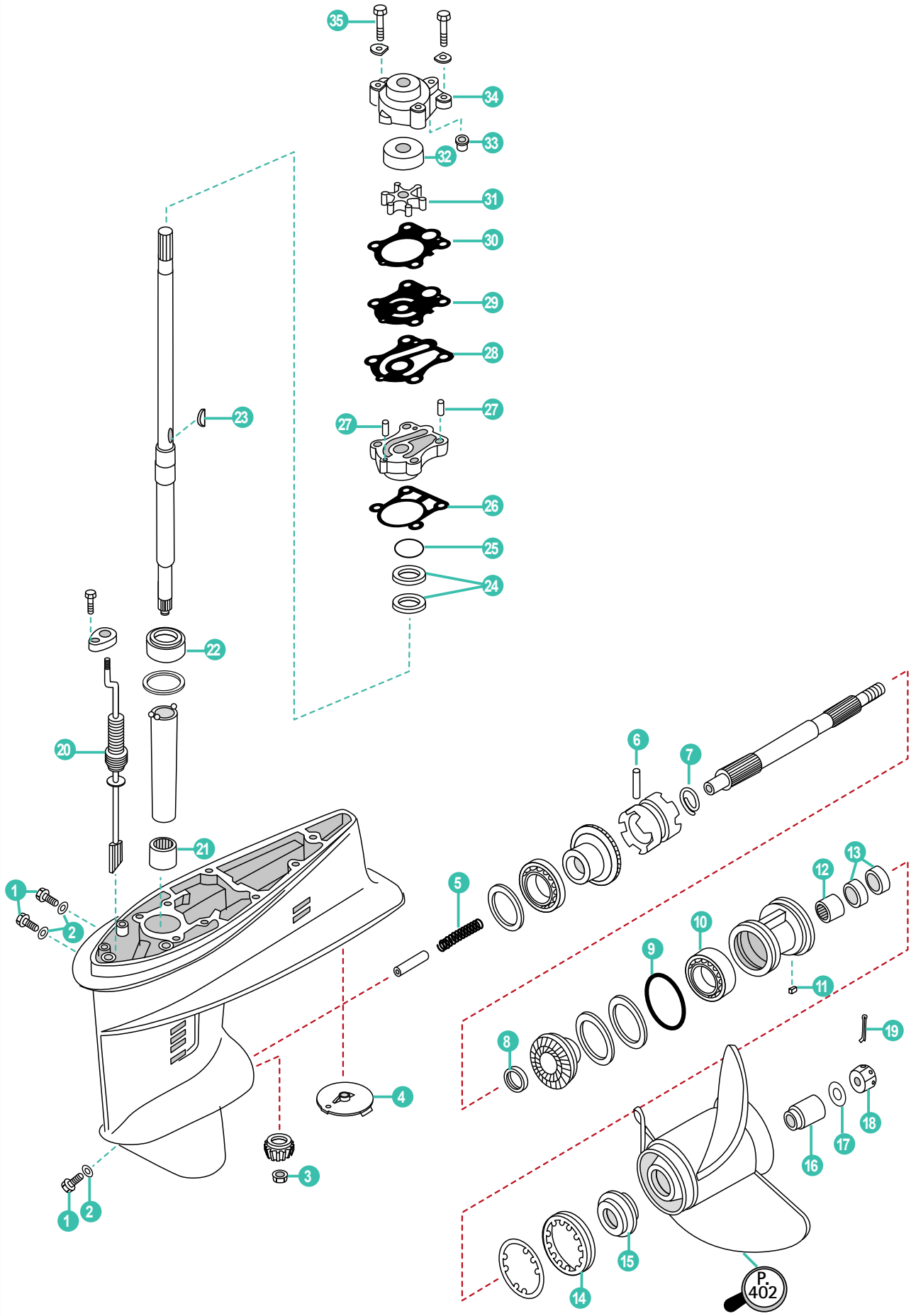
35
34
33
32
31
30
29
28
27
27
26
25
24
23
22
20
21
1
2
5
6
7
12
13
10
9
11
8
19
4
3
1
2
18
17
16
15
14
P. 402

	REF	OEM				
1	REC90340-08002	90340-08002	TAPÓN	PLUG, STRAIGHT SCREW	TAPPO	BOUCHON DE VIDANGE
2	REC90430-08020	90430-08020	JUNTA	GASKET	GUARNIZIONE	JOINT
3	REC90179-10M14	90179-10M14	TUERCA	NUT	DADO	ECROU
4	CM664-45371-01	664-45371-01	ÁNODO DERIVA	TAB-TRIM	ANODO	ANODE
5	PAF25-04060002	90501-10065	MUELLE	SPRING, COMPRESSION	MOLLA	RESSORT
6	REC90250-05010	90250-05010	PASADOR	PIN, STRAIGHT	SPINOTTO	PIN
7	REC648-45633-00	648-45633-00	ARO	RING CROSS PIN	O-RING	JOINT TORIQUE
8	REC90201-20417	90201-20417	ARANDELA	WASHER, PLATE	RONDELLA	RONDELLE
9	REC93210-60MA3	93210-60MA3	ARO TÓRICO	O-RING	O-RING	JOINT TORIQUE
10	REC93306-00612	93306-00612	RODAMIENTO	BEARING	CUSCINETTO	ROULEMENT
11	REC90282-04010	90282-04010	CHAVETA	KEY, STRAIGHT	CHIAVETTA	CLAVETTE
12	REC93315-22004	93315-22004	RODAMIENTO	BEARING	CUSCINETTO	ROULEMENT
13	REC93101-20M07	93101-20M07	RETÉN	OIL SEAL	PARAOLIO	JOINT SPI
14	REC664-45384-00	664-45384-00	TUERCA	NUT	DADO	EROU
15	REC6L2-45987-00	6L2-45987-01	DISTANCIADOR	SPACER	DISTANZIALE	ENTRETOISE
16	REC689-45997-00	689-45997-00	DISTANCIADOR	SPACER	DISTANZIALE	ENTRETOISE
17	PAGB/T97.1-14	92990-14200	ARANDELA	WASHER, PLAIN	RONDELLA	RONDELLE
18	REC90171-14013-00	90171-14013	TUERCA HÉLICE	NUT, CASTLE	DADO	ECROU D'HELICE
19	REC91490-30025	91490-30025	PIN	PIN	SPINOTTO	CLAVETTE
20	REC682-44147-00	682-44147-00	TAPÓN GUÍA	BOOT, SHIFT ROD	TAPPO	GUIDE
21	REC93315-220V7	93315-220V7	RODAMIENTO	BEARING	CUSCINETTO	ROULEMENT
22	REC93332-00001	93332-00001	RODAMIENTO	BEARING	CUSCINETTO	ROULEMENT
23	REC90280-03024	90280-03024	CHAVETA	KEY, WOODRUFF	CHIAVETTA	CLAVETTE
24	REC93101-23070	93101-23070	RETÉN	OIL SEAL	PARAOLIO	JOINT SPI
25	REC93210-41042	93210-41042	ARO TÓRICO	O-RING	O-RING	JOINT TORIQUE
26	REC663-44316-A0	663-44316-A0	JUNTA	GASKET, WATER PUMP	GUARNIZIONE	JOINT
27	REC663-44324-00	663-44324-A0	JUNTA	GASKET, CARTRIDGE	GUARNIZIONE	JOINT
28	PAF25-04000007	93604-08062	PIN	PIN	SPINOTTO	PIN
29	REC663-44323-00	663-44323-00	PLATO BOMBA AGUA	OUTTER PLATE	PIASTRA POMPA ACQUA	PLAQUE DE POMPE A EAU
30	REC663-44315-A0	663-44315-A0	JUNTA	GASKET, WATER PUMP	GUARNIZIONE	JOINT
31	REC6H4-44352-02	6H4-44352-02	TURBINA	IMPELLER	GIRANTE	TURBINE
32	REC663-44322-00	663-44322-00	CASQUILLO INOX	INSERT, CARTRIDGE	BOCCOLA INOX.	INSERT DE POMPE A EAU
33	REC663-44366-00	663-44366-00	CASQUILLO GOMA	DAMPER, WATER SEAL	BOCOLLA GOMMA	BAGUE
34	REC663-44311-02	6J8-44311-00	CUERPO BOMBA AGUA	HOUSING, WATER	CORPO POMPA ACQUA	CORPS DE POMPE A EAU
35	REC90119-08M13	90119-08M13	TORNILLO	BOLT, WITH WASHER	VITE	VIS

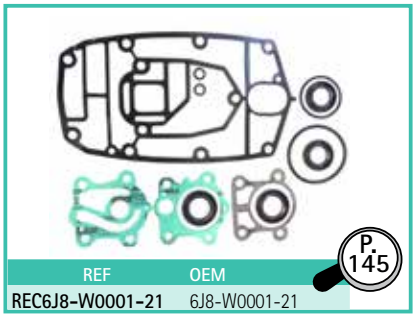

P. 145

REF	OEM
REC6J8-W0001-21	6J8-W0001-21

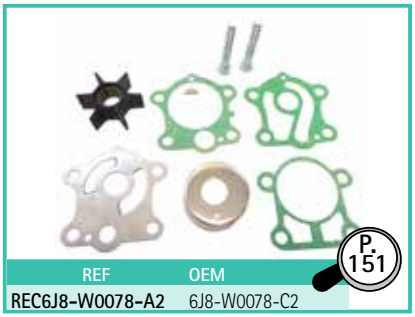

P. 151

REF	OEM
REC6J8-W0078-A2	6J8-W0078-C2



REF
REC80W90U3
REC80W90U6
RECGREU1
RECGREU12

P. 43

2T STROKES 25Q/QEO • 40HP N/H/HE/QE/JWH/QM/QWC • 40JMH • 50HP/ETN/D/DEO/DEMTO

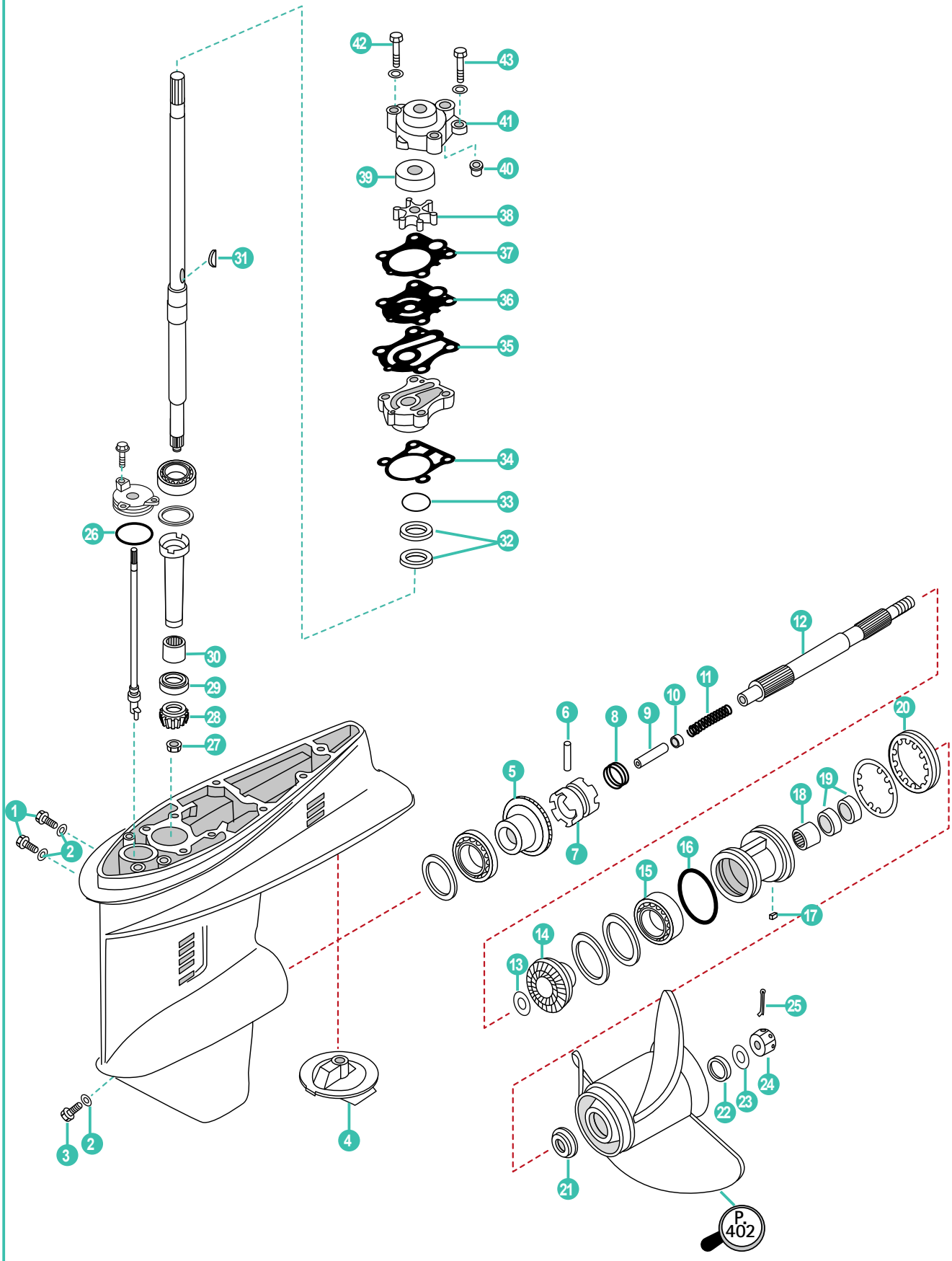

	REF	OEM				
1	REC90340-08002	90340-08014	TORNILLO	BOLT	VITE	VIS
2	REC90430-08020	90430-08020	JUNTA	GASKET	GUARNIZIONE	JOINT
3	REC688-45341-00	688-45341-00	TAPÓN DRENAJE	PLUG	TAPPO	BOUCHON DE VIDANGE
4	CM664-45371-01	664-45371-01	ÁNODO	ANODE	ANODO	ANODE
5	REC6H4-45560-00	6H4-45560-00	PIÑÓN	GEAR	PIGNONE	PIGNON
6	REC90250-06023	90250-06023	PASADOR	PIN	SPINOTTO	PIN
7	REC663-45631-00	663-45631-01	DESPLAZABLE	CLUTCH	SCORREVOLE	CRABOT
8	REC663-45633-00	663-45633-00	ARO	SPING	O-RING	JOINT TORIQUE
9	REC676-45635-00	676-45635-00	PIVOTE	PIN	SPINOTTO	PIVOT
10	REC663-45634-00	663-45634-00	CASQUILLO	SLIDE	BOCCOLA	DOUILLE
11	REC90501-16M01	90501-16M01	MUELLE	SPRING	MOLLA	RESSORT
12	REC679-45611-00	679-45611-01	EJE HÉLICE	SHAFT PROPELLER	ASSE ELICA	ARBRE D'HELICE
13	REC90201-22429	90201-22429	ARANDELA	WASHER	RONDELLA	RONDELLE
14	REC6H4-45570-00	6H4-45571-00	PIÑÓN MARCHA ATRÁS	GEAR REV.	PIGNONE MARCIA INDIETRO	PIGNON MARCHE ARRIERE
15	REC93306-00702	93306-00702	RODAMIENTO BOLAS	BEARING	CUSCINETTO	ROULEMENT
16	REC93210-66M98	93210-66M98	ARO	O-RING	O-RING	JOINT TORIQUE
17	REC90282-04010	90282-04010	CHAVETA	KEY	CHIAVETTA	CLAVETTE
18	REC93317-22204	93317-22204	COJINETE AGUJAS	CILINDRIC BEARING	CUSCINETTO	ROULEMENT
19	REC93101-22067	93101-22067	RETÉN ACEITE	OIL SEAL	PARAOLIO	JOINT SPI
20	REC697-45384-00	697-45384-00	TUERCA	NUT	DADO	ÉCROU
21	REC663-45987-00	663-45987-02	ESPACIADOR	SPACER	DISTANZIALE	ENTRETOISE
22	REC670-45997-00	670-45997-02	ESPACIADOR	SPACER	DISTANZIALE	ENTRETOISE
23	REC92990-16200	92990-16200	ARANDELA	WASHER	RONDELLA	RONDELLE
24	REC90171-16011	90171-16011	TUERCA	NUT	DADO	ÉCROU D'HELICE
25	REC91490-30030	91490-30030	PASADOR	PIN COTTER	SPINOTTO	CLAVETTE
26	REC93210-49046	93210-49046	ARO PLATO	O-RING	O-RING	JOINT TORIQUE
27	REC90170-12138	90170-12138	TUERCA	NUT	DADO	ÉCROU
28	REC6H4-45551-00	6H4-45551-00	PIÑÓN	GEAR	PIGNONE	PIGNON
29	REC663-45552-00	663-45552-00	COJINETE (-1998)	BEARING (-1998)	CUSCINETTO (-1998)	ROULEMENT (-1998)
30	REC93315-32224	93315-32224	RODAMIENTO AGUJAS	BEARING	CUSCINETTO	ROULEMENT
31	REC90280-03024	90280-03024	CHAVETA	KEY	CHIAVETTA	CLAVETTE
32	REC93101-23070	93101-23070	RETÉN ACEITE	OIL SEAL	PARAOLIO	JOINT SPI
33	REC93210-41042	93210-41042	ARO, BASE BOMBA	O-RING	O-RING	JOINT TORIQUE
34	REC663-44316-A0	663-44316-A0	JUNTA BASE	GASKET	GUARNIZIONE	JOINT
35	REC663-44324-00	663-44324-A0	JUNTA	GASKET	GUARNIZIONE	JOINT
36	REC663-44323-00	663-44323-00	TAPA	OUTTER PLATE	TAPPO	PLAQUE DE POMPE A EAU
37	REC663-44315-A0	663-44315-A0	JUNTA	GASKET	GUARNIZIONE	JOINT
38	REC6H4-44352-02	6H4-44352-02	IMPULSOR	IMPELLER	GIRANTE	TURBINE
39	REC663-44322-00	663-44322-00	CASQUILLO	INSERT CARTRIDGE	BOCCOLA	INSERT DE POMPE A EAU
40	REC663-44366-00	663-44366-00	RETÉN	SEAL	TENUTA	JOINT SPI
41	REC663-44311-02	663-44311-02	CUERPO BOMBA AGUA	HOUSING WATER P.	CORPO POMPA ACQUA	CORPS DE POMPE A EAU
42	REC97095-08045	97395-08045	TORNILLO	BOLT	VITE	VIS
43	REC97095-08055	97395-08055	TORNILLO	BOLT	VITE	VIS

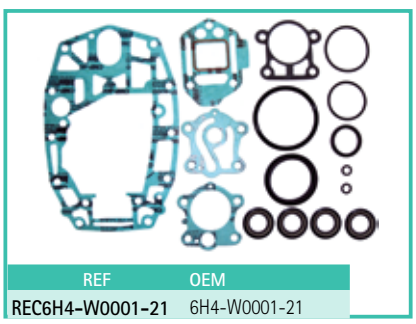

REF	OEM
REC6H4-W0001-21	6H4-W0001-21

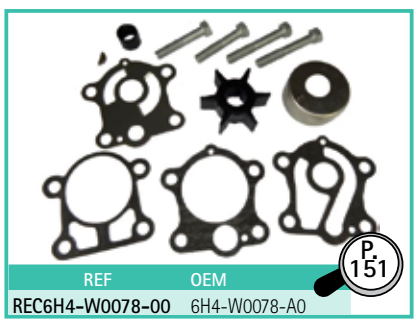

P. 151

REF	OEM
REC6H4-W0078-00	6H4-W0078-A0



REF
REC80W90U3
REC80W90U6
RECGREU1
RECGREU12

P. 43

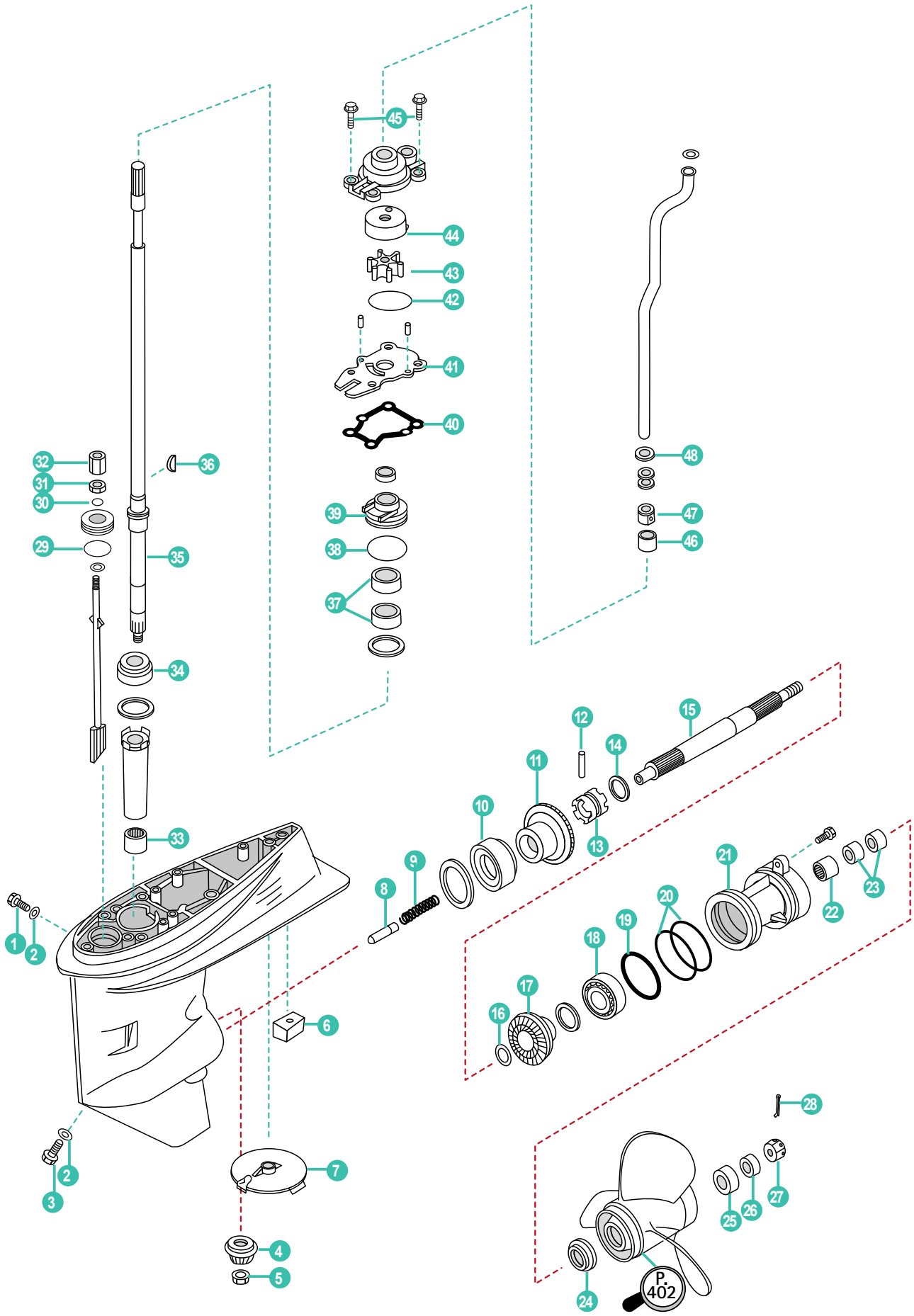
1
2
3
4
5
6
7
8
9
10
11
12
13
14
15
16
17
18
19
20
21
22
23
24
25
26
27
28
29
30
31
32
33
34
35
36
37
38
39
40
41
42
43
44
45
46
47
48
P. 402

	REF	OEM				
1	REC90340-08002	90340-08002	TAPÓN	PLUG	TAPPO	BOUCHON DE VIDANGE
2	REC90430-08020	90430-08020	JUNTA	GASKET	GUARNIZIONE	JOINT
3	REC688-45341-00	688-45341-10	TAPÓN	PLUG	TAPPO	BOUCHON DE VIDANGE
4	REC66T-45551-00	66T-45551-00	PIÑÓN	PINION (13T)	PIGNONE	PIGNON (13D)
5	REC90170-12138	90170-12138	TUERCA	NUT	DADO	ECROU
6	CM67C-45251-00	67C-45251-00	ÁNODO	ANODE	ANODO	ANODE
7	CM664-45371-01	664-45371-01	ÁNODO DERIVA	TAB-TRIM	ANODO	ANODE
8	REC66T-45635-00	66T-45635-00	BULÓN	PLUNGER	BULLONE	BOULON
9	PAT40-04050002	90501-15M01	RESORTE	SPRING	MOLLA	RESSORT
10	REC93332-00003	93332-00003	RODAMIENTO	BEARING	CUSCINETTO	ROULEMENT
11	REC66T-45560-00	66T-45560-01	PIÑÓN	GEAR 1 (26T)	PIGNONE	PIGNON (26D)
12	REC90250-06023	90250-06023	PASADOR	PIN	SPINOTTO	PIN
13	REC66T-45631-00	66T-45631-00	SELECTOR	CLUTCH, DOG	SELETTORE	CRABOT
14	REC663-45633-00	663-45633-00	ANILLO	RING	O-RING	JOINT TORIQUE
15	REC66T-45611-00	66T-45611-00	EJE HÉLICE	SHAFT	ASSE ELICA	ARBRE D'HELICE
16	REC90201-22429	90201-22429	ARANDELA	WASHER	RONDELLA	RONDELLE
17	REC66T-45571-00	66T-45571-00	PIÑÓN	PINION 2 (26T)	PIGNONE	PIGNON 2 (26D)
18	REC93306-001U1	93306-001U1	RODAMIENTO	BEARING	CUSCINETTO	ROULEMENT
19	REC93210-69MG6	93210-69MG6	ANILLO TÓRICO	O-RING	O-RING	JOINT TORIQUE
20	REC93210-74MG5	93210-74MG5	ANILLO TÓRICO	O-RING	O-RING	JOINT TORIQUE
21	REC63D-45361-02-4D	63D-45361-02-4D	DIÁVOLO	CAP	COP. CASSA INGRANAGGI	DIABOLO
22	REC93317-22204	93317-22204	RODAMIENTO	BEARING	CUSCINETTO	ROULEMENT
23	REC93101-22M00	93101-22M00	RETÉN	OIL SEAL	PARAOLIO	JOINT SPI
24	REC663-45987-00	663-45987-02	ESPACIADOR	SPACER	DISTANZIALE	ENTRETOISE
25	REC66T-45997-00	66T-45997-00	ESPACIADOR	SPACER	DISTANZIALE	ENTRETOISE
26	REC90389-22M01	90389-22M01	CASQUILLO GRUESO	BUSH	BOCCOLA	RONDELLE D 'HELICE
27	REC90171-16011	90171-16011	TUERCA HÉLICE	NUT, CASTLE	DADO	ECROU D'HELICE
28	REC91490-30025	91490-30025	PASADOR ALETAS	PIN	SPINOTTO	CLAVETTE
29	REC93210-33MG4	93210-33MG4	ARILLO TÓRICO	O-RING	O-RING	JOINT TORIQUE
30	REC93210-06ME6	93210-06ME6	ARILLO TÓRICO	O-RING	O-RING	JOINT TORIQUE
31	REC95380-06700	95380-06700	TUERCA	NUT	DADO	ECROU
32	REC61N-44146-00	61N-44146-00	CONECTOR	CONNECTOR	RACCORDO	CONNECTEUR
33	REC93315-32224	93315-32224	RODAMIENTO	BEARING	CUSCINETTO	ROULEMENT
34	REC93332-00001	93332-00001	RODAMIENTO	BEARING	CUSCINETTO	ROULEMENT
35	REC66T-45501-01 REC66T-45501-10	66T-45501-01 66T-45501-11	EJE VERTICAL EJE VERTICAL	DRIVE SHAFT DRIVE SHAFT	ASSE VERTICALE ASSE VERTICALE	ARBRE VERTICAL ARBRE VERTICAL
36	REC90280-03M03	90280-03M03	CHAVETA	KEY	CHIAVETTA	CLAVETTE
37	REC93101-22M60	93101-22M60	RETÉN	OIL SEAL	PARAOLIO	JOINT SPI
38	REC93210-48MG8	93210-48MG8	ARILLO TÓRICO	O-RING	O-RING	JOINT TORIQUE
39	REC63D-44341-00	63D-44341-00	CUERPO	HOUSING	CORPO	LOGEMENT
40	REC63D-44316-00	63D-44316-00	JUNTA	GASKET, WATER PUMP	GUARNIZIONE	JOINT
41	REC66T-44323-00	66T-44323-00	PLATO	OUTTER PLATE	PIASTRA	PLAQUE DE POMPE A EAU
42	REC93210-59MG7	93210-59MG7	ARILLO TÓRICO	O-RING	O-RING	JOINT TORIQUE
43	REC6H4-44352-02	6H4-44352-02	TURBINA	IMPELLER	GIRANTE	TURBINE
44	REC63D-44322-00	63D-44322-00	CASQUILLO	INSERT	BOCCOLA	INSERT DE POMPE A EAU
45	REC90119-08M15	90119-08M15	TORNILLO	BOLT	VITE	BOULON
46	REC663-44366-00	663-44366-00	CASQUILLO	DAMPER	BOCCOLA	DOUILLE
47	REC63D-44312-00	63D-44312-00	TAPA	COVER	COPERCHIO	BAGUE
48	REC90430-12072	90430-12072	JUNTA	GASKET	GUARNIZIONE	JOINT

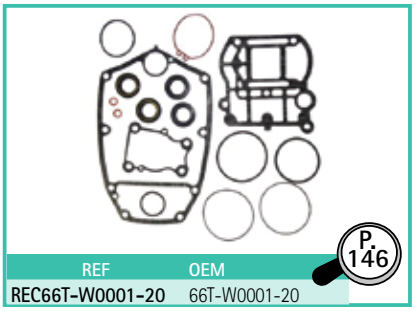

REF	OEM
REC66T-W0001-20	66T-W0001-20

P. 146

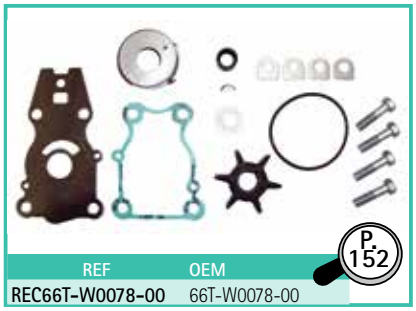

REF	OEM
REC66T-W0078-00	66T-W0078-00

P. 152



REF
REC80W90U3
REC80W90U6
RECGREU1
RECGREU12

P. 43

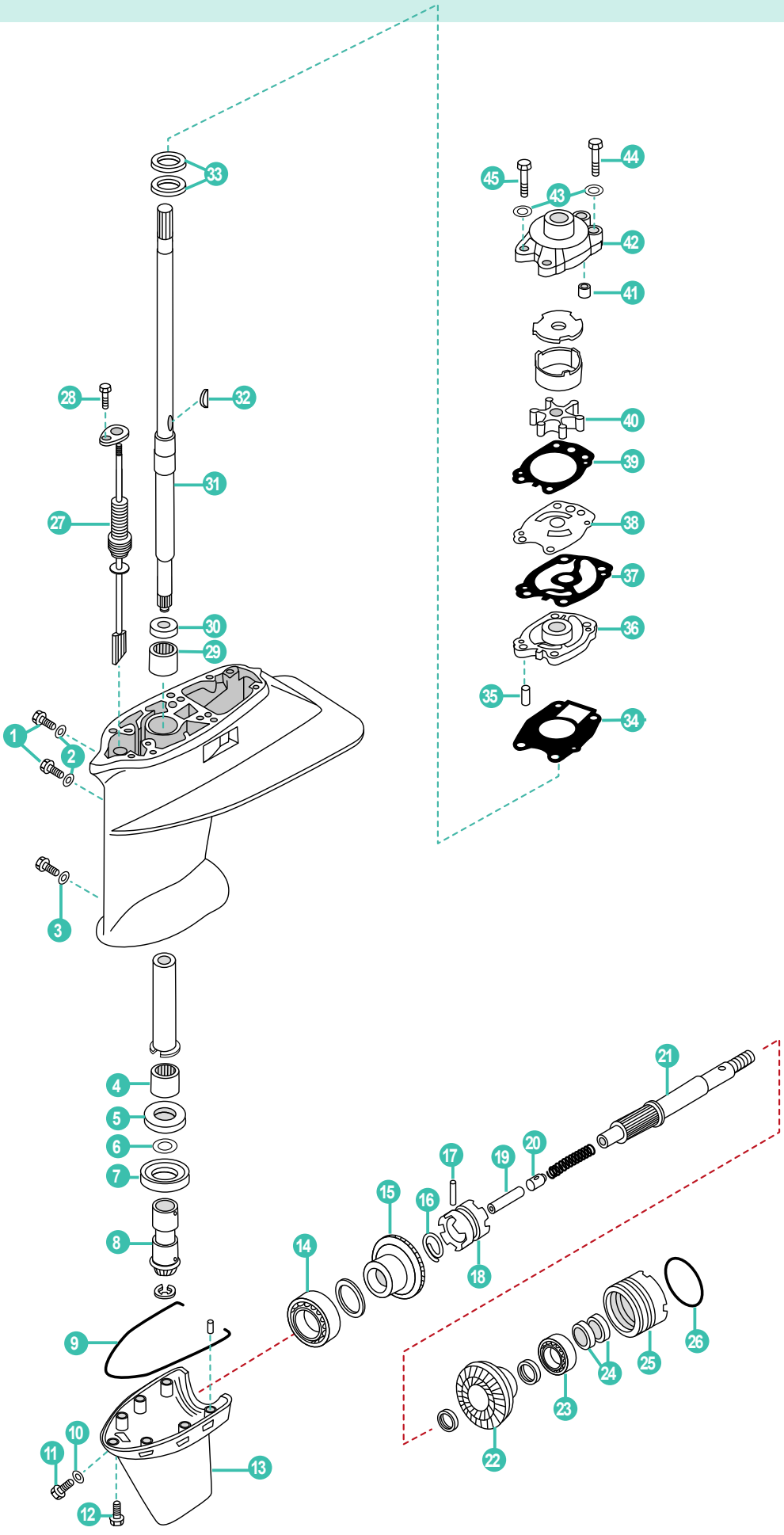
1
2
3
4
5
6
7
8
9
10
11
12
13
14
15
16
17
18
19
20
21
22
23
24
25
26
27
28
29
30
31
32
33
34
35
36
37
38
39
40
41
42
43
44
45

	REF	OEM				
1	REC90340-08002	90340-08002	TORNILLO, DRENAJE	BOLT DRAIN	VITE	BOUCHON DE VIDANGE
2	REC90430-08020	90430-08020	JUNTA	GASKET	GUARNIZIONE	JOINT
3	REC90430-06M03	90430-06M03	JUNTA	GASKET	GUARNIZIONE	JOINT
4	REC93315-324U1	93315-324U1	COJINETE DE RODILLOS	BEARING	CUSCINETTO	ROULEMENT
5	REC93342-624U0	93342-624U0	COJINETE CON RODAMIENTOS	BEARING	CUSCINETTO	ROULEMENT
	REC676-45587-00	676-45587-00-70	GRUESO	SHIM (t:0.070mm)	SPESSORE	CALE (0.070mm)
6	REC676-45587-00-75	676-45587-00-75	GRUESO	SHIM (t:0.075mm)	SPESSORE	CALE (0.075mm)
	REC676-45587-00-80	676-45587-00-80	GRUESO	SHIM (t:0.080mm)	SPESSORE	CALE (0.080mm)
7	REC93390-000U0	93390-000U0	COJINETE DE RODILLOS	BEARING	CUSCINETTO	ROULEMENT
8	REC6F5-45551-00	6F5-45551-00	PIÑÓN	PINION (13T)	PIGNONE	PIGON (13D)
9	REC676-45314-00	676-45314-00	SELLO DE FUNDA INFERIOR	SEAL	BOCCOLA COPERCHIO INFERIORE	JOINT DE CARTER INFERIEUR
10	REC90430-08020	90430-08020	JUNTA	GASKET	GUARNIZIONE	JOINT
11	REC688-45341-00	688-45341-10	TAPÓN, DREN	BOLT DRAIN	TAPPO	BOUCHON DE VIDANGE
12	REC90105-06M01	90105-06M01	TORNILLO	BOLT	VITE	VIS
13	REC6F5-45312-00-4D	6F5-45312-01-4D	FUNDA INFERIOR	CASING	COPERCHIO INFERIORE	CARTER INFERIEUR
14	REC93332-000U0	93332-000U0	COJINETE	BEARING	CUSCINETTO	ROULEMENT
15	REC6F5-45560-00	6F5-45560-00	ENGRANAJE COMPLE 1	GEAR	INGRANAGGIO	PIGNON
16	REC663-45633-00	663-45633-00	ANILLO DE PASADOR	RING, CROSS PIN	O-RING	JOINT TORIQUE
17	REC90250-06023	90250-06023	PASADOR CILÍNDRICO	PIN, STRAIGHT	SPINOTTO	PIN
18	REC663-45631-00	663-45631-01	EMBRAGUE DE GARRA	CLUTCH DOG	GIUNTO A DENTI FRONTALI	CRABOT
19	REC676-45635-00	676-45635-00	ÉMBOLO DE CAMBIO	PLUNGER SHIFT	CAMBIO PISTONE	PISTON
20	REC663-45634-00	663-45634-00	DESLIZADOR, CAMBIO	SLIDE SHIFT	SCORREVOLE	DOUILLE
21	REC6F6-45611-00	6F6-45611-00	EJE PROPULSOR	SHAFT PROPELLER	ASSE GIRANTE	ARBRE D'HELICE
22	REC6F5-45570-00	6F5-45570-00	ENGRANAJE COMPL 2.	GEAR	INGRANAGGIO	PIGNON
23	REC93306-204Y7	93306-20401	COJINETE (B6204)	BEARING	CUSCINETTO	ROULEMENT
24	REC93101-20048	93101-20048	SELLO ACEITE	OIL SEAL	PARAOLIO	JOINT SPI
25	REC676-45361-00	676-45361-01-94	FUNDA INFERIOR	CAP LOWER CASING	COPERCHIO INFERIORE	DIABOLO
26	REC93210-57M00	93210-57M00	ARO TÓRICO	O-RING	O-RING	JOINT TORIQUE
27	REC650-44147-00	650-44147-00	HULE DE VARILLA	BOOT, SHIFT ROD	AVVIO, BARRA DI SPOSTAMENTO	GUIDE
28	PAGB/T5783-M6X10	97095-06010	PERNO	BOLT	VITE	VIS
29	REC93315-217U0	93315-217U0	COJINETE DE RODILLOS	BEARING	CUSCINETTO	ROULEMENT
30	REC676-45533-00	676-45533-00	ARANDELA DE EMPUJE AXIAL	WASHER	RONDELLA	RONDELLE
31	REC676-45501-10	676-45501-10	EJE DE MANDO COMPL.	DRIVE SHAFT	ASSE VERTICALE	ARBRE VERTICAL
32	REC90280-04M00	90280-04M00	CUNA WOODRUFF	KEY WOODRUFF	CHIAVE WOODRUFF	CLAVETTE
33	REC93101-22M00	93101-22M00	SELLO ACEITE	OIL SEAL	PARAOLIO	JOINT SPI
34	REC676-44316-A1	676-44316-A1	EMPAQUE	GASKET	GUARNIZIONE	JOINT
35	PAF25-04000007	93604-08062	PASADOR DE CLAVIJA	PIN, DOWEL	SPINOTTO	CLAVETTE
36	REC676-44341-00	676-44341-94	CAJA BOMBA DE AGUA	HOUSING WATER PUMP	ALLOGGIAMENTO POMPA ACQUA	BASE DE POMPE A EAU
37	REC676-44324-A0	676-44324-A1	EMPAQUE	GASKET	GUARNIZIONE	JOINT
38	REC676-44323-00-40	676-44323-40	PLACA EXTERIOR DEL CARTUCHO	PLATE	PIASTRA	PLAQUE DE POMPE A EAU
39	REC676-44315-00	676-44315-A1	EMPAQUE	GASKET	GUARNIZIONE	JOINT
40	REC6F5-44352-00	6F5-44352-00	IMPULSOR	IMPELLER	GIRANTE	TURBINE
41	REC663-44366-00	663-44366-00	GOMA DEL SELLO DE AGUA	DAMPER WATER SEAL	BOCCOLA GOMMA ACQUA	BAGUE
42	REC676-44311-00	676-44311-00	CAJA BOMBA AGUA	HOUSING WATER PUMP	ALLOGGIAMENTO POMPA ACQUA	CORPS DE POMPE A EAU
43	PAGB/T97.1-8	92995-08600	ARANDELA	WASHER	RONDELLA	RONDELLE
44	REC97095-08055	97095-08055	PERNO	BOLT	VITE	VIS
45	REC97095-08045	97095-08045	PERNO	BOLT	VITE	VIS

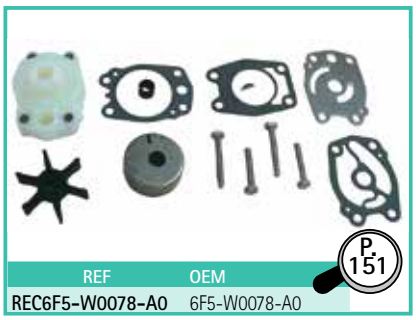

P. 151

REF	OEM
REC6F5-W0078-A0	6F5-W0078-A0

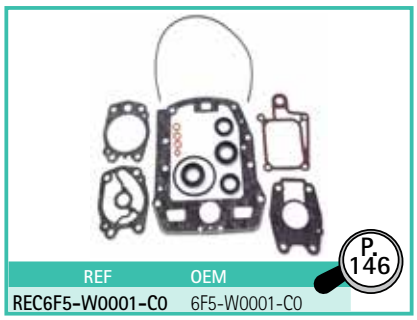

P. 146

REF	OEM
REC6F5-W0001-C0	6F5-W0001-C0



P. 43

REF
REC80W90U3
REC80W90U6
RECGREU1
RECGREU12

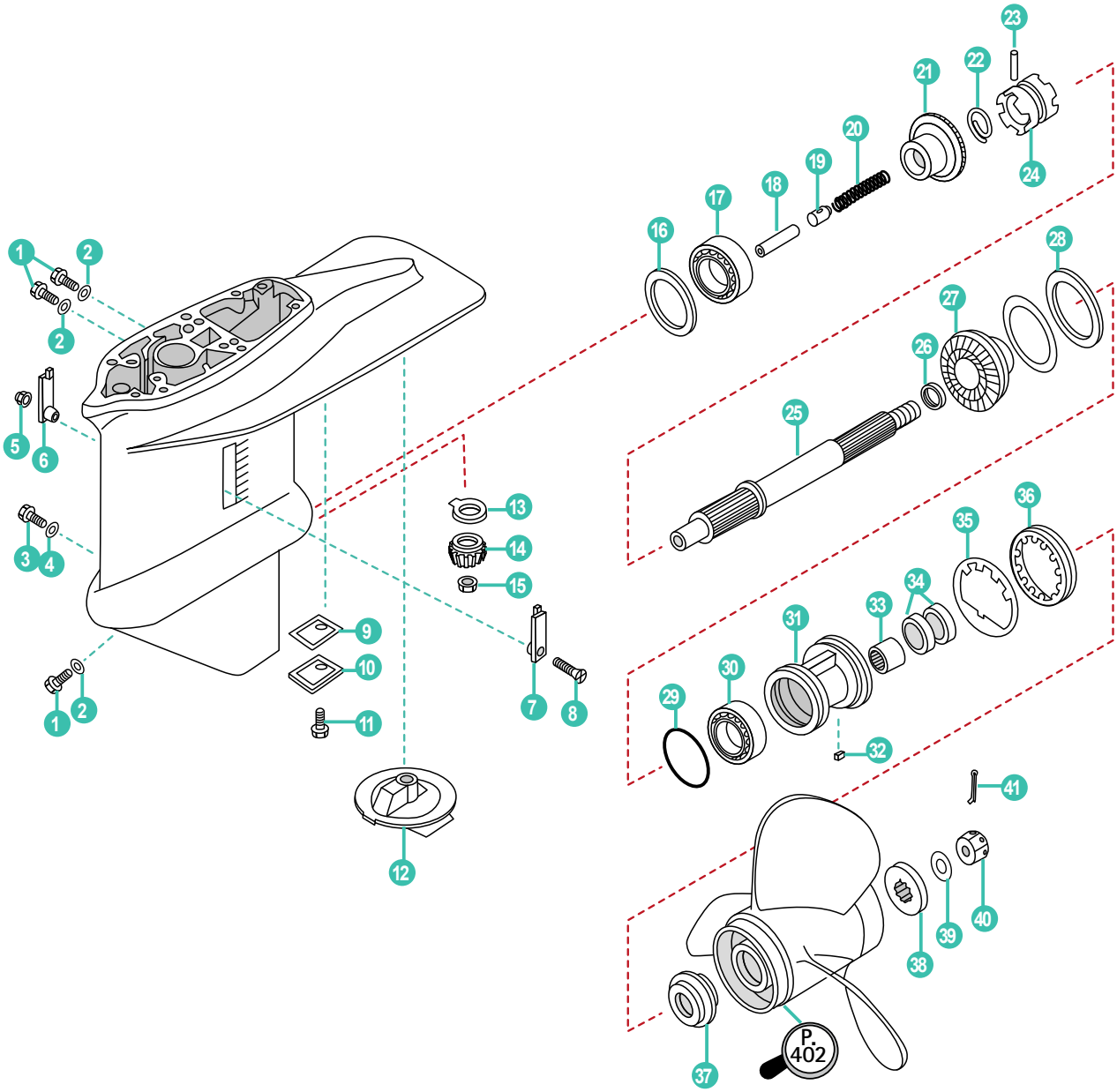
1
2
2
5
6
3
4
1
2
9
10
11
12
13
14
15
7
8
16
17
18
19
20
21
22
23
24
28
27
26
25
36
35
34
33
31
30
29
32
41
40
39
38
37
P. 402

	REF	OEM				
1	REC90340-08002	90340-08M14	TORNILLO NIVEL ACEITE	VENT PLUG	VITE LIVELLO OLIO	BOUCHON DE VIDANGE
2	REC90430-08020	90430-08020	ARANDELA	WASHER	RONDELLA	RONDELLE
3	REC90149-06M00	90149-06M00	TORNILLO DRENAJE	DRAIN SCREW	VITE DRENAGGIO	BOUCHON DE VIDANGE
4	REC90430-06M03	90430-06M03	JUNTA	GASKET	GUARNIZIONE	JOINT
5	PAGB/T889.1-M5		TUERCA	NUT	DADO	ÉCROU
6	REC688-45215-02	688-45215-02	TAPA ENTRADA DE AGUA	WATER SCREEN	COPERCHIO RAFFREDDAMENTO	GRILLE D'ENTREE D'EAU
7	REC688-45214-02	688-45214-02	TAPA ENTRADA DE AGUA	WATER SCREEN	COPERCHIO RAFFREDDAMENTO	GRILLE D'ENTREE D'EAU
8	PAGB/T820-M5X30		TORNILLO	SCREW	VITE	VIS
9	REC679-45315-A1	679-45315-A1	JUNTA	GASKET	GUARNIZIONE	JOINT
10	REC679-45321-02	679-45321-02	PLACA	PLATE	PIASTRA	PLAQUE
11	PAGB/T818-M6X16	98580-06016	TORNILLO	SCREW	VITE	VIS
12	TEN01101	679-45371-00	ÁNODO	ANODE	ANODO	ANODE
13	REC663-45552-00	663-45552-00	COJINETE PLANO	BEARING	CUSCINETTO	ROULEMENT
14	REC6H9-45551-00	6H9-45551-00	PIÑÓN	PINION	PIGNONE	PIGNON
15	REC90170-12138	90170-012138	TUERCA	NUT	DADO	ÉCROU
16	PAT40-04000004-1	663-45567-01-10	GRUESO (0.10mm)	SHIM (0.10mm)	SPESSORE (0.10mm)	CALE (0.10mm)
	PAT40-04000004-2	663-45567-01-12	GRUESO (0.12mm)	SHIM (0.12mm)	SPESSORE (0.12mm)	CALE (0.12mm)
	PAT40-04000004-3	663-45567-01-15	GRUESO (0.15mm)	SHIM (0.15mm)	SPESSORE (0.15mm)	CALE (0.15mm)
	PAT40-04000004-5	663-45567-01-30	GRUESO (0.30mm)	SHIM (0.30mm)	SPESSORE (0.30mm)	CALE (0.30mm)
17	REC93332-00003	93332-00003	COJINETE	BEARING	CUSCINETTO	ROULEMENT
18	REC676-45635-00	676-45635-00	ÉMBOLO DE CAMBIO	PIVOT	PERNO	PIVOT
19	REC663-45634-00	663-45634-00	DESLIZADOR DE CAMBIO	CLUTCH DOG	TRAINABILE CAMBIO	PISTON
20	REC90501-16M01	90501-16M01	RESORTE DE COMPRESIÓN	SPRING	MOLLA	RESSORT
21	REC679-45560-00	679-145560-00	ENGRAJAE (26T)	GEAR	INGRANNAGGIO	PIGON (26D)
22	REC663-45633-00	663-45633-00	ANILLO DEL PASADOR	ANNULAR SPRING, CLUTCH	ANELLO	RESSORT
23	REC90250-06023	90250-06023	PASADOR	PIN	FERMO	GOUPILLE
24	REC663-45631-00	663-45631-01	EMBRAGUE DE GARRA	CLUCH DOG	SELETTORE	CRABOT
25	REC679-45611-00	679-45611-01	EJE PROPULSOR	PROPELLER SHAFT	ASSE ELICA	ARBRE D'HELICE
26	REC90201-22429	90201-22429	ARANDELA PLANA	WASHER	RONDELLA	RONDELLE
27	REC679-45571-00	679-45571-00	ENGRANAJE (26T)	GEAR	INGRANNAGGIO	PIGNON (26D)
28	REC663-45576-00	663-455576-00	ARANDELA DE EMPUJE	PUSH WASHER	RONDELLA DI SPINTA	RONDELLE D'APPUI
29	REC93210-66M98	93210-66M98	O-RING	O-RING	O-RING	JOINT TORIQUE
30	REC93306-00702	93306-00702	COJINETE	BEARING	CUSCINETTO	ROULEMENT
31	REC679-45331-00	679-45331-00-94	DIABOLO	DIABOLO	DIAVOLO	DIABOLO
32	REC90282-04010	902082-04010	CHAVETA	KEY	CHIAVETTE	CLAVETTE
33	REC93317-22204	93317-22204	COJINETE	BEARING	CUSCINETTO	ROULEMENT
34	REC93101-22067	93101-22067	RETÉN DE ACEITE	SEAL OIL	PAROLIO	JOINT SPI
35	REC90214-48M03	90214-48M03	ARANDELA	WASHER	RONDELLA	RONDELLE
36	REC697-45384-00	697-45384-00	TUERCA	NUT	DADO	ÉCROU
37	REC663-45987-00	663-45987-00	ESPACIADOR	DISTANCE WASHER	DISTANZIALE	ENTRETOISE
38	REC66T-45997-00	66T-45997-00	ESPACIADOR	DISTANCE WASHER	DISTANZIALE	ENTRETOISE
39	REC90389-22M01	90389-22M01	ARANDELA	WASHER	RONDELLA	RONDELLE
40	REC90171-16011	90171-16011	TUERCA	NUT	DADO	ÉCROU D'HELICE
41	REC91490-30025	91490-30025	CLIP	CLIP	CLIP	GOUPILLE

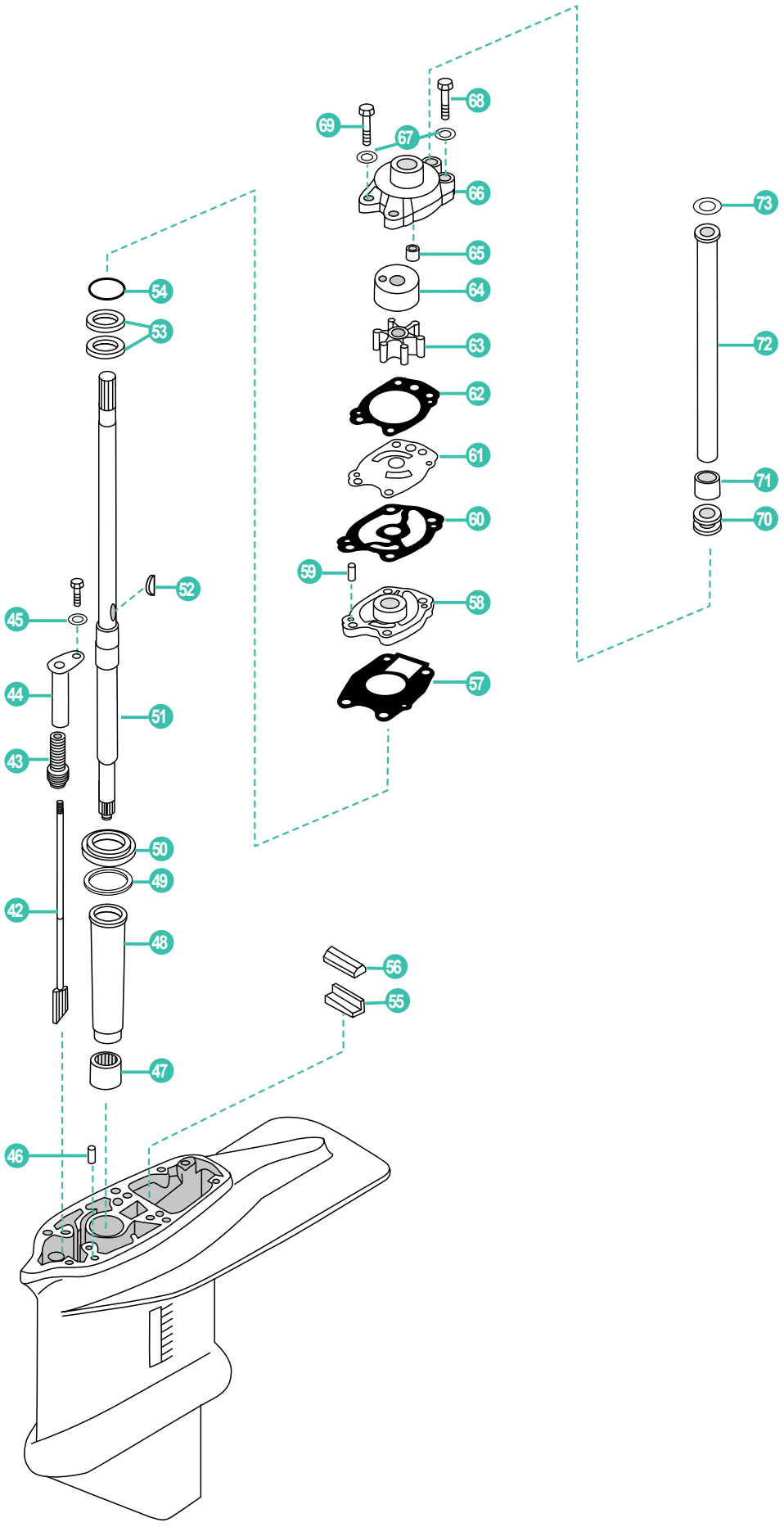
68
69
67
66
73
65
64
54
53
63
72
62
61
71
60
70
59
58
52
45
57
44
51
43
50
49
42
48
56
55
47
46

	REF	OEM				
42	REC679-44150-10	679-44150-10	EJE SELECTOR (L)	SHAFT SELECTOR (L)	ASSE SELETTORE (L)	ARBRE SELECTEUR (L)
	REC679-44150-00	679-44150-00	EJE SELECTOR (S)	SHAFT SELECTOR (S)	ASSE SELETTORE (S)	ARBRE SELECTEUR (S)
43	REC650-44147-00	650-44147-00	FUELLE EJE	BOOT, SHIFT ROD	BOOT, SHIFT ROD	SOUFFLET
44	REC679-44152-00	679-44152-00	BUJE LEVE DE CAMBIO	HUBE GEAR LEVE	MOZZO LEVA CAMBIO	LEVIER DE VITESSE
45	PAGB/T97.1-6	92990-06600	ARANDELA PLANA	WASHER	RONDELLA	RONDELLE
46	REC93606-12019	93606-12019	PIN CENTRADOR	PIN DOWEL	SPINOTTO DI CENTRAGGIO	CLAVETTE DE CENTRAGE
47	REC93315-32224	93315-32224	COJINETE	BEARING	CUSCINETTO	ROULEMENT
48	REC679-45536-00	679-45536-00	CAMISA EJE TRASMISION	BUSHING NYLON	CAMICIA ASSE TRASMISSIONE	AXE TRANSMISSION
	PAT40-04000003-1	663-45587-01-10	GRUESO (0.10mm)	SHIM (0.10mm)	SPESSORE (0.10mm)	CALE (0.10mm)
	PAT40-04000003-2	663-45587-01-12	GRUESO (0.12mm)	SHIM (0.12mm)	SPESSORE (0.12mm)	CALE (0.12mm)
	PAT40-04000003-3	663-45587-01-15	GRUESO (0.15mm)	SHIM (0.15mm)	SPESSORE (0.15mm)	CALE (0.15mm)
49	PAT40-04000003-4	663-45587-01-18	GRUESO (0.18mm)	SHIM (0.18mm)	SPESSORE (0.18mm)	CALE (0.18mm)
	PAT40-04000003-5	663-45587-01-30	GRUESO (0.30mm)	SHIM (0.30mm)	SPESSORE (0.30mm)	CALE (0.30mm)
	PAT40-04000003-6	663-45587-01-40	GRUESO (0.40mm)	SHIM (0.40mm)	SPESSORE (0.40mm)	CALE (0.40mm)
	PAT40-04000003-7	663-45587-01-50	GRUESO (0.50mm)	SHIM (0.50mm)	SPESSORE (0.50mm)	CALE (0.50mm)
50	PAT40-04000027	93332-00079	COJINETE	BEARING	CUSCINETTO	ROULEMENT
51	REC679-45501-10	679-45501-10	EJE L	SHAFT L	ASSE L	ARBRE L
52	REC90280-04M00	90280-04M00	CHAVETA	KEY	CHIAVETTA	CLAVETTE
53	REC93101-22067	93101-22067	RETÉN DE ACEITE	SEAL OIL	PARAOLIO	JOINT SPI
54	REC93210-41042	93210-41042	TÓRICA	O-RING	O-RING	JOINT TORIQUE
55	REC663-45376-00	663-45376-00	GUIA RETEN	GUIDE RUB. SEAL	GUIDA PARAOLIO	GUIDE
56	REC663-45375-00	663-45375-00	GOMA SELLADORA	SEALING RUBBER	ANELLO SIGILLANTE	JOINT CAOUTCHOUC
57	REC679-44316-A0	679-44316-A0	JUNTA	GASKET	GUARNIZIONE	JOINT
58	REC679-44341-00	679-44341-00-94	CAJA BOMBA DE AGUA	WATER PUMP HOUSING	SCATOLA POMPA ACQUA	BASE DE POMPE A EAU
59	PAF25-04000007	93604-08062	PASADOR	PIN	FERMO	GOUPILLE
60	REC676-44324-A0	676-44324-A0	JUNTA	GASKET	GUARNIZIONE	JOINT
61	REC676-44323-00-40	676-44323-00	PLACA EXTERIOR DEL CARTUCHO	OUTER PLATE	PLACCA ESTERNA	PLAQUE DE POMPE A EAU
62	REC676-44315-00	676-44315-A0	JUNTA	GASKET	GUARNIZIONE	JOINT
63	REC6F5-44352-00	6F5-44352-002	IMPULSOR	IMPELLER	GIRANTE	TURBINE
64	REC676-44322-00	676-44322-00	CASQUILLO INOX	CARTRIDGE INSERT	BOCCOLA	INSERT DE POMPE A EAU
65	REC663-44366-00	663-44366-00	RETEN TUBO AGUA	DAMPER, WATER SEAL	GHIERA	JOINT DE TUBE D'EAU
66	REC676-44311-00	676-44311-00	CAJA BOMBA DE AGUA	WATER PUMP HOUSING	SCATOLA POMPA ACQUA	CORPS DE POMPE A EAU
67	PAGB/T97.1-8	92990-08600	ARANDELA PLANA	WASHER	RONDELLA	RONDELLE
68	REC97095-08055	97095-08055	PERNO	BOLT	BOULONE	BOULON
69	REC97095-08045	97095-08045	PERNO	BOLT	BOULONE	BOULON
70	PAT40-02000002	663-44367-00	GOMA DEL SELLO DE AGUA	GUIDE BUSHING, WATER PIPE	GUARNIZIONE	GUIDE DE PIPE D'EAU
71	REC90430-12072	90430-12072	JUNTA	GASKET	GUARNIZIONE	JOINT
72	REC676-44361-00	676-44361-00	TUBO S	TUBE S	TUBO S	TUBE S
	REC676-44361-10	676-44361-10	TUBO L	TUBE L	TUBO L	TUBE L
73	PAF25-02000019	90202-12060	GOMA DEL SELLO DE AGUA	GUIDE BUSHING, WATER PIPE	GUARNIZIONE	GUIDE DE PIPE D'EAU



REF
REC80W90U3
REC80W90U6
RECGREU1
RECGREU12

P. 43

2T STROKES 55ED • 55ET • 55B/BM/BT

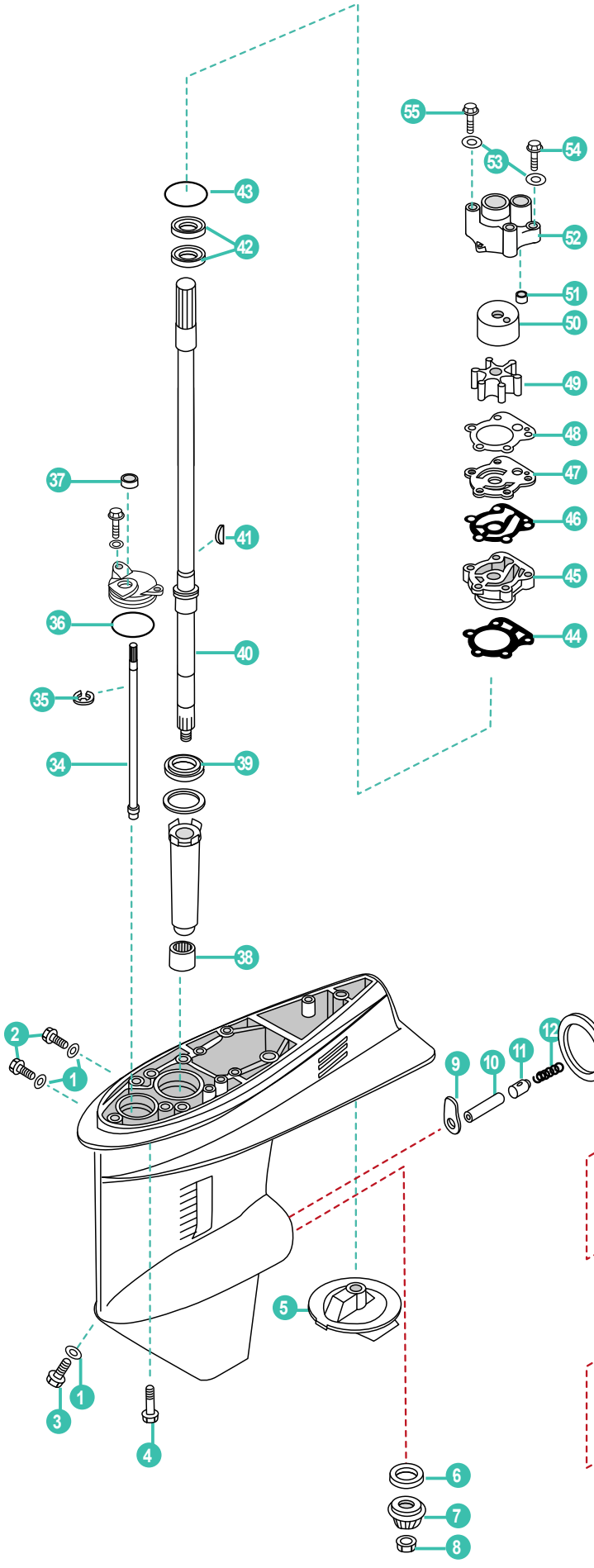



REF	OEM
REC698-W0001-21	698-W0001-21

P. 158

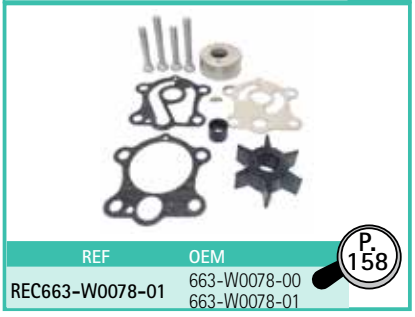

REF	OEM
REC663-W0078-01	663-W0078-00 663-W0078-01

P. 158



REF
REC80W90U3
REC80W90U6
RECGREU1
RECGREU12

P. 158

	REF	OEM				
1	REC90430-08020	90430-08020	JUNTA	GASKET	GUARNIZIONE	JOINT
2	REC90340-08002	90340-08002	TORNILLO	STRAIGHT SCREW	VITE	VIS
3	REC688-45341-00	688-45341-10	TAPÓN, DREN	PLUG, DRAIN	TAPPO	BOUCHON DE VIDANGE
4	REC97075-10040	97075-10040	PERNO	BOLT	PERNO	BOULON
5	TEN01101	679-45371-00	ÁNODO	ANODE	ANODO	ANODE
6	REC663-45552-00	663-45552-00	COJINETE PLANO	BEARING, PLAIN	CUSCINETTO PIATO	ROULEMENT
7	REC697-45551-00	697-45551-00	PIÑÓN	PINION	PIGNONE	PIGNON
8	REC90170-12138	90170-12138	TUERCA	NUT	DADO	ÉCROU
9	REC663-44151-00	663-44151-00	LEVA DE CAMBIO	CAM SHIFT	ALBERO	CAME
10	REC688-45635-00	688-45635-00	PLUNGER, SHIFT	ÉMBOLO DE CAMBIO	CAMBIO PISTONE	PISTON
11	REC663-45634-00	663-45634-00	DESLIZADOR CAMBIO	SLIDE, SHIFT	SCORREVOLE	DOUILLE
12	REC90501-16233	90501-16233	RESORTE DE COMPRESIÓN	SPRING	MOLLA	RESSORT
13	REC93332-00003	93332-00003	COJINETE	BEARING	CUSCINETTO	ROULEMENT
14	REC697-45560-00	697-45560-00	ENGRANAJE COMPLETO	GEAR	INGRANAGGIO	PIGON
15	REC663-45631-00	663-45631-01	EMBRAGUE DE GARRA	CLUTCH, DOG	GIUNTO A DENTI FRONTALE	CRABOT
16	REC90250-06023	90250-06023	PASADOR CILÍNDRICO	PIN, STRAIGHT	SPINOTTO	PIN
17	REC663-45633-00	663-45633-00	ANILLO DE PASADOR	RING, CROSS PIN	O-RING	JOINT TORIQUE
18	REC697-45611-00	697-45611-00	EJE PROPULSOR	SHAFT PROPELLER	ASSE	ARBRE D'HELICE
19	REC90201-22429	90201-22429	ARANDELA PLANA	WASHER, PLATE	RONDELLA	RONDELLE
20	REC697-45570-00	697-45571-00	ENGRANAJE	GEAR	INGRANAGGIO	PIGNON
21	REC93306-00702	93306-00702	COJINETE	BEARING	CUSCINETTO	ROULEMENT
22	REC93210-66M98	93210-66M98	ANILLO O	O- RING	O-RING	JOINT TORIQUE
23	REC663-45331-00-94	663-45331-00-94	CAJA DE COJINETE	HOUSING, BEARING	SEDE CUSCINETTO	DIABOLO
24	REC90282-04010	90282-04010	CHAVETA	KEY, STRAIGHT	CHIAVETTA	CLAVETTE
25	REC93317-22204	93317-22204	COJINETE	BEARING	CUSCINETTO	ROULEMENT
26	REC93101-22067	93101-22067	SELLO ACEITE	OIL SEAL	PARAOLIO	JOINT SPI
27	REC90214-48M03	90214-48M03	ARANDELA	WASHER	RONDELLA	RONDELLE
28	REC697-45384-00	697-45384-00	TUERCA	NUT	DADO	ECROU
29	REC663-45987-00	663-45987-02	ESPACIADOR	SPACER	DISTANZIALE	ENTRETOISE
30	REC670-45997-00	670-45997-02	ESPACIADOR	SPACER	DISTANZIALE	ENTRETOISE
31	REC92990-16200	92990-16200	ARANDELA PLANA	WASHER, PLAIN	RONDELLA	RONDELLE
32	REC90171-16011	90171-16011	TUERCA ENTALLADA	NUT, CASTLE	DADO	ECROU D'HELICE
33	REC91490-40030	91490-40025	CHAVETA	PIN, COTTER	CHIAVETTA	GOUPILLE
34	REC663-44144-01	663-44144-01	VARILLA DE CAMBIO	ROD, SHIFT	ASTICELLA	LEVIER DE VITESSE
35	REC99001-08600-00	99001-08600	CLIP	CLIP	CLIP	CLAVETTE
36	REC93210-49046	93210-49046	ANILLO	O-RING	O-RING	JOINT TORIQUE
37	REC93106-09014	93106-09014	RETÉN DE ACEITE	OIL SEAL	PARAOLIO	JOINT SPI
38	REC93315-32224	93315-32224	COJINETE DE RODILLOS	BEARING	CUSCINETTO	ROULEMENT
39	REC93332-00001	93332-00001	COJINETE	BEARING	CUSCINETTO	ROULEMENT
40	REC663-45510-01	663-45510-01	EJE DE MANDO	DRIVE SHAFT ASSY	ASSE VERTICALE	ARBRE VERTICAL
41	REC90280-03M03	90280-03M03	CHAVETA	KEY, WOODRUFF	CHIAVE	CLAVETTE
42	REC93101-23070	93101-23070	SELLO ACEITE	OIL SEAL	PARAOLIO	JOINT SPI
43	REC93210-41042	93210-41042	ANILLO O	O-RING	O-RING	JOINT TORIQUE
44	REC663-44316-A0	663-44316-A0	EMPAQUE	GASKET, WATER PUMP	GUARNIZIONE	JOINT DE POMPE A EAU
45	REC663-44311-02	663-44341-00	CAJA BOMBA	HOUSING, WATER PUMP	CORPO POMPA	BASE DE POMPE A EAU
46	REC663-44324-00	663-44324-A0	EMPAQUE	GASKET, CARTRIDGE	GUARNIZIONE	JOINT
47	REC663-44323-00	663-44323-00	PLACA EXTERIOR	OUTTER PLATE	PIASTRA EXT.	PLAQUE DE POMPE A EAU
48	REC663-44315-A0	663-44315-A0	EMAPAQUE	GASKET, WATER PUMP	GUARNIZIONE	JOINT
49	REC6H3-44352-00	697-44352-00	IMPULSOR	IMPELLER	GIRANTE	TURBINE
50	REC663-44322-00	663-44322-00	CARTUCHO	INSERT CARTRIDGE	CARTUCCIA	INSERT DE POMPE A EAU
51	REC663-44366-00	663-44366-00	GOMA SELLO	DAMPER, WATER SEAL	BOCCOLA GOMMA	BAGUE
52	REC663-44311-02	663-44311-02	CAJA BOMBA	HOUSING, WATER PUMP	CORPO POMPA	CORPS DE POMPE A EAU
53	PAGB/T97.1-8	92995-08600	ARANDELA	WASHER	RONDELLA	RONDELLE
54	REC97095-08045	97095-08045	PERNO	BOLT	VITE	VIS
55	REC97095-08055	97095-08055	PERNO	BOLT	VITE	VIS

2T STROKES 75A/AED/AEDL/AET/AEHD/AEDX • 85A/AE/AET/AEDL/AEDX

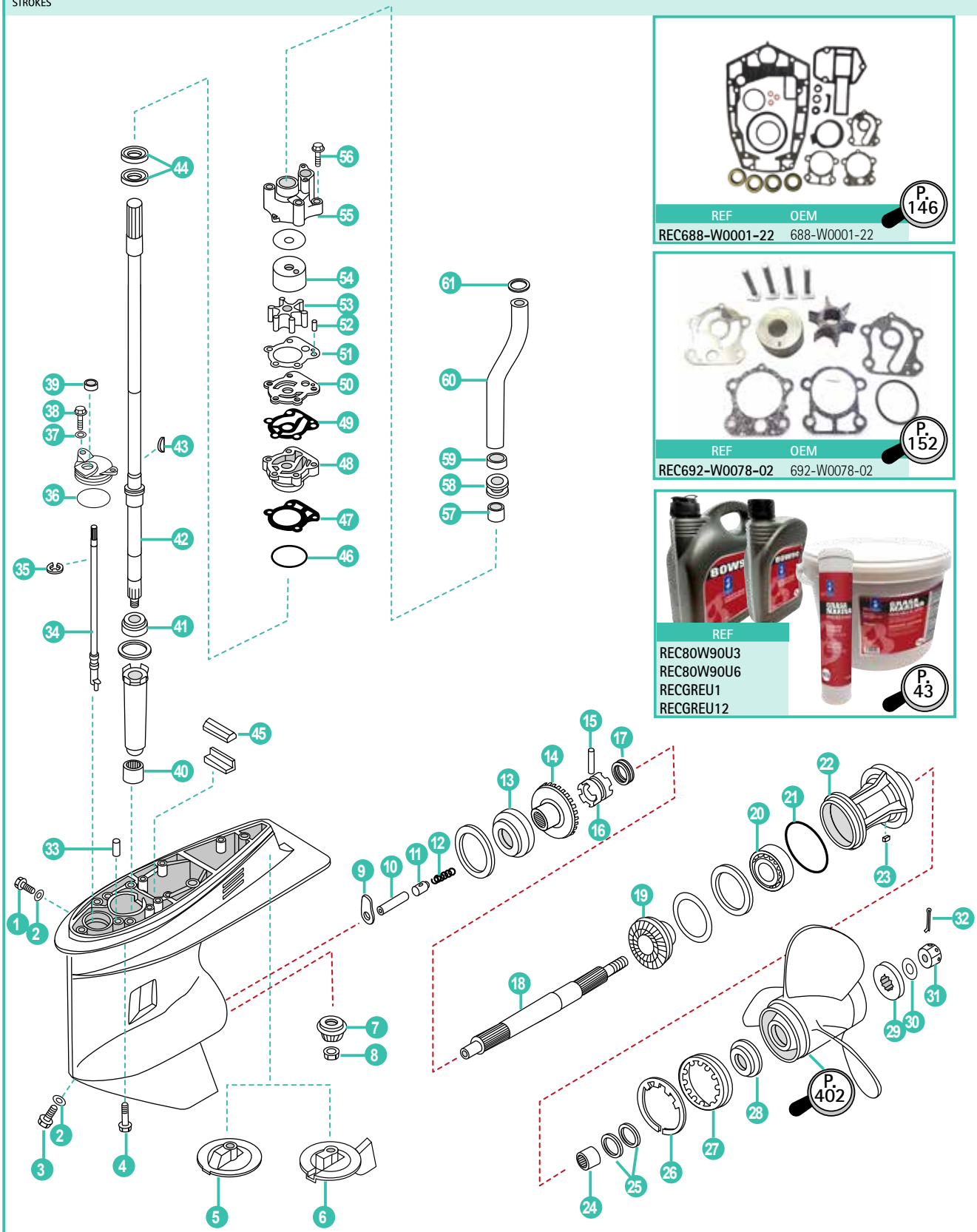

REF	OEM
REC688-W0001-22	688-W0001-22

P. 146

REF	OEM
REC692-W0078-02	692-W0078-02

P. 152

REF
REC80W90U3
REC80W90U6
RECGREU1
RECGREU12

P. 43

	REF	OEM				
	REC692-45300-16-8D	692-45300-14-4D	COLA COMPLETA L	LOWER UNIT ASSY L	PIEDE COMPLETO L	EMBASE COMPLETE L
1	REC90340-08002	90340-08002	TAPÓN	PLUG STRAIGHT SCREW	TAPPO	BOUCHON DE VIDANGE
2	REC90430-08020	90430-08020	JUNTA	GASKET	GUARNIZIONE	JOINT
3	REC688-45341-00	688-45341-10	TAPÓN	PLUG DRAIN	TAPPO	BOUCHON DE VIDANGE
4	REC97075-10040	97075-10040	TORNILLO	BOLT WITH WASHER	VITE	VIS
5	TEN01153	6E5-45371-10	ÁNODO TIMÓN	TAB-TRIM	ANODO	ANODE

P. 402

	REF	OEM				
6	CM688-45371-02	688-45371-02	ÁNODO TIMÓN STD.	TAB-TRIM STD	ANODO STD	ANODE
7	REC688-45551-00	688-45551-01	ENGRANAJE	PINION	PIGNONE	PIGNON
8	REC90170-16M01	90170-16M01	TUERCA	NUT	DADO	ECROU
9	REC663-44151-00	663-44151-00	LEVA	CAM, SHIFT	LEVA	CAME
10	REC688-45635-00	688-45635-00	BULÓN	PLUNGER, SHIFT	BULLONE	BOULON
11	REC688-45634-00	688-45634-00	EMPUJADOR	SLIDE, SHIFT	SCORREVOLE	DOUILLE
12	REC90501-16233	90501-16233	MUELLE	SPRING, COMPRESSION	MOLLA	RESSORT
13	REC93332-000W7	93332-000W7	RODAMIENTO	BEARING	CUSCINETTO	ROULEMENT
14	REC688-45560-00	688-45560-00	ENGRANAJE	PINION	PIGNONE	PIGNON
15	REC90250-07M02	90250-07M02	PASADOR	PIN, STRAIGHT	SPINOTTO	PIN
16	REC688-45631-00	688-45631-01	DESPLAZABLE	CLUTCH, DOG	GIUNTO A DENTI FRONTALE	CRABOT
17	REC688-45633-00	688-45633-00	ARO METÁLICO	RING, CROSS PIN	O-RING	JOINT TORIQUE
18	REC688-45611-00	688-45611-00	EJE HÉLICE	SHAFT, PROPELLER	ASSE ELICA	ARBRE D'HELICE
19	REC688-45570-00	688-45571-01	ENGRANAJE	PINION	PIGNONE	PIGNON
20	REC93306-207U0	93306-207U0	RODAMIENTO	BEARING	CUSCINETTO	ROULEMENT
21	REC93210-85M97	93210-85M97	ARO TÓRICO	O-RING	O-RING	JOOINT TORIQUE
22	REC688-45331-00-94	688-45331-00-94	DIÁBOLO	HOUSING, BEARING	COP. CASSA INGRANAGGI	DIABOLO
23	REC90282-04010	90282-04010	CHAVETA	KEY, STRAIGHT	CHIAVETTA	CLAVETTE
24	REC93317-325U0	93317-325U0	RODAMIENTO	BEARING	CUSCINETTO	ROULEMENT
25	REC93101-25M03	93101-25M03	RETÉN	OIL SEAL	PARAOLIO	JOINT SPI
26	REC688-45383-01	688-45383-02	ARANDELA CIERRE	WASHER, CLAW	RONDELLA CHIUSURA	RONDELLE
27	REC688-45384-00	688-45384-00	TUERCA	NUT	DADO	ECROU
28	REC688-45987-00	688-45987-01	SEPARADOR	SPACER	DISTANZIALE	ENTRETOISE
29	REC67F-45997-00	67F-45997-00	SEPARADOR	SPACER	DISTANZIALE	ENTRETOISE
30	REC90389-25M00	90389-25M00	CASQUILLO	BUSH	BOCCOLA	RONDELLE
31	REC90171-16011	90171-16011	TUERCA	NUT, CASTLE	DADO	ECROU D'HELICE
32	REC91490-40030	91490-40025	PASADOR ALETAS	PIN, COTTER	SPINOTTO	GOUPILLE
33	REC93606-12019	93606-12019	PASADOR	PIN, DOWEL	SPINOTTO	PIN
34	REC663-44144-01	663-44144-01	EJE SELECTOR	ROD, SHIFT	ASSE SELETTORE	ARBRE DE VITESSE
35	REC99001-08600-00	99001-08600	CERCLIP	CIRCLIP	CIRCLIP	CIRCLIP
36	REC93210-49046	93210-49046	ARO TÓRICO	O-RING	O-RING	JOINT TORIQUE
37	PAGB/T5783-M6X16	92995-06600	ARANDELA	WASHER	RONDELLA	RONDELLE
38	PAGB/T97.1-6	97095-06016	TORNILLO	BOLT	VITE	VIS
39	REC93106-09014	93106-09014	RETÉN	OIL SEAL	PARAOLIO	JOINT SPI
40	REC93315-325V1	93315-325V1	RODAMIENTO	BEARING	CUSCINETTO	ROULEMENT
41	REC93332-000U3	93332-000U3	RODAMIENTO	BEARING	CUSCINETTO	ROULEMENT
42	REC688-45501-11	688-45501-11	EJE VERTICAL	DRIVE SHAFT COMP.	ASSE VERTICALE	ARBRE VERTICAL
43	REC90280-04M04	90280-04M04	CHAVETA	KEY, WOODRUFF	CHIAVETTA	CLAVETTE
44	REC93101-25M03	93101-25M03	RETÉN	OIL SEAL	PARAOLIO	JOINT SPI
45	REC688-45375-00	688-45375-00	RETÉN DAMPER	DAMPER WASHER	PARAOLIO DAMPER	JOINT SILENT BLOC
46	REC93210-46044	93210-46044	ARO TÓRICO	O-RING	O-RING	JOINT TORIQUE
47	REC688-44316-00	688-44316-A0	JUNTA	GASKET WATER PUMP	GUARNIZIONE	JOINT DE POMPE A EAU
48	REC688-44341-01	688-44341-01-94	TAPA INF. BOMBA AGUA	HOUSING, WATER PUMP	CORPO INF. POMPA ACQUA	BASE DE POMPE A EAU
49	REC688-44324-00	688-44324-A0	JUNTA	GASKET, CARTRIDGE	GUARNIZIONE	JOINT
50	REC688-44323-00	688-44323-40	PLATO	OUTTER PLATE, CARTRIDGE	PIASTRA	PLAQUE DE POMPE A EAU
51	REC688-44315-00	688-44315-A0	JUNTA	GASKET, WATER PUMP	GUARNIZIONE	JOINT
52	PAF25-04000007	93604-10M03	CENTRADOR	PIN, DOWEL	SPINOTTO	PIN
53	REC688-44352-03	688-44352-03	TURBINA	IMPELLER	GIRANTE	TURBINE
54	REC688-44322-00	688-44322-00	CASQUILLO INOX.	INSERT, CARTRIDGE	BOCCOLA INOX.	INSERT DE POMPE A EAU
55	REC688-44311-01	688-44311-01	CUERPO BOMBA AGUA	HOUSING, WATER PUMP	CORPO POMPA ACQUA	CORPS DE POMPE A EAU
56	REC90119-08M13	90119-08M13	TORNILLO	BOLT WITH WASHER	VITE	VIS
57	REC663-44366-00	663-44366-00	CASQUILLO GOMA	DAMPER, WATER SEAL	BOCCOLA GOMMA	BAGUE
58	PAT40-02000002	663-44367-00	GOMA DEL SELLO DE AGUA	GUIDE BUSHING, WATER PIPE	GU	GUIDE DE PIPE D'EAU
59	REC90430-12072	90430-12072	JUNTA	GASKET	GUARNIZIONE	JOINT
60	REC688-44361-10	688-44361-10	TUBO DE AGUA L	WATER TUBE L	TUBO ACQUA L	TUBE D'EAU L
61	PAF25-02000019	90202-12060	ARANDELA	WASHER	RONDELLA	RONDELLE

2T STROKES 75CETOL/TLR(B)/C'08/TL • 80AEO/AETO/A/AEMTO • 85A/AEO/TLR/AET/AET(O)/TR(H) • 90A/AEO/TLR/AET/AET(O)/TR(H)

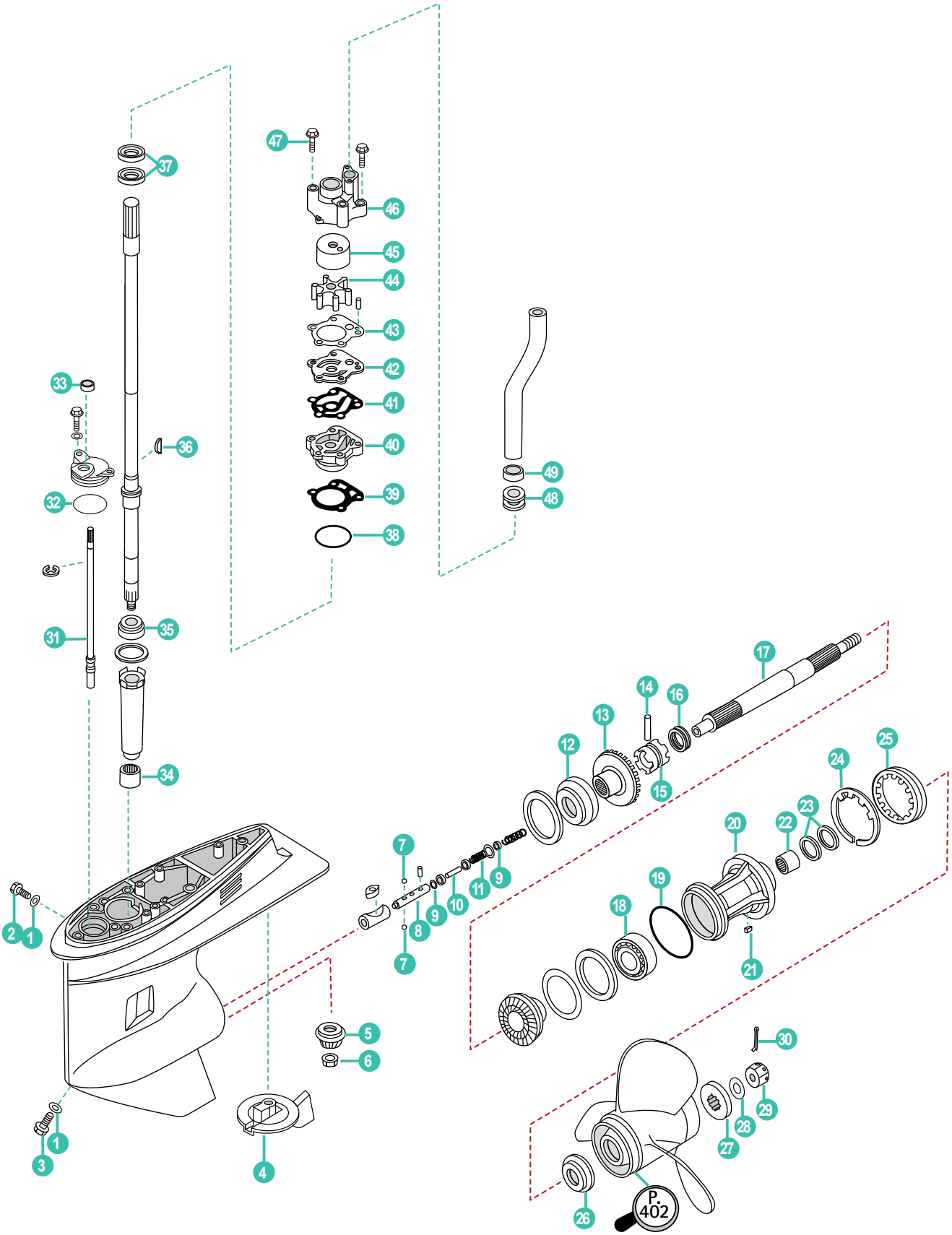

	REF	OEM				
1	REC90430-08020	90430-08020-00	JUNTA	GASKET	GUARNIZIONE	JOINT
2	REC90340-08002	90340-08002	TAPÓN	PLUG	TAPPO	BOUCHON DE VIDANGE
3	REC688-45341-00	688-45341-00-00	TAPÓN	PLUG	TAPPO	BOUCHON DE VIDANGE
4	CM688-45371-02	688-45371-02-00	ÁNODO	ANODE	ANODO	ANODE
5	REC688-45551-00	688-45551-01-00	PIÑÓN	GEAR	PIGNONE	PIGNON
6	REC90170-16M01	90170-16M01-00	TUERCA	NUT	DADO	ECROU
7	REC93503-16003	93503-16003	ESFERA	BALL	SFERA	BILLE
8	REC6H1-45634-02	6H1-45634-02	DESPLAZABLE	SLIDE, SHIFT	SCORREVOLE	DOUILLE
9	REC90183-02M03	90183-02M03	TUERCA	NUT	DADO	ECROU
10	REC6H1-45668-00	6H1-45668-00	EJE	SHAFT	ASSE	ARBRE
11	REC90501-12M48	90501-12M48	RESORTE	SPRING	MOLLA	RESSORT
12	REC93332-000W7	93332-000W7-00	RODAMIENTO	BEARING	CUSCINETTO	ROULEMENT
13	REC688-45560-00	688-45560-00-00	ENGRANAJE	GEAR	INGRANAGGIO	PIGNON
14	REC90250-07M02	90250-07M02-00	PASADOR	PIN	SPINOTTO	CLAVETTE
15	REC6H1-45631-01	6H1-45631-01-00	SELECTOR	CLUTCH	SELETTORE	CRABOT
16	REC688-45633-00	688-45633-00-00	MUELLE	SPRING	MOLLA	RESSORT
17	REC6H1-45611-00	6H1-45611-01-00	EJE HÉLICE	PROPELLER SHAFT	ASSE ELICA	ARBRE D'HELICE
18	REC93306-207U0	93306-207U0-00	RODAMIENTO	BEARING	CUSCINETTO	ROULEMENT
19	REC93210-85M97	93210-85M97-00	ARO TÓRICO	O-RING	O-RING	JOINT TORIQUE
20	REC688-45331-00-94	688-45331-00-94	DIAVOLO	DIABOLO	DIAVOLO	DIABOLO
21	REC90282-04010	90282-04010	CHAVETA	KEY	CHIAVETTA	CLAVETTE
22	REC93317-325U0	93317-325U0-00	RODAMIENTO	BEARING	CUSCINETTO	ROULEMENT
23	REC93101-25M03	93101-25M03-00	RETÉN	OIL SEAL	PARAOLIO	JOINT SPI
24	REC688-45383-01	688-45383-02-00	ARANDELA	WASHER	RONDELLA	RONDELLE
25	REC688-45384-00	688-45384-00-00	TUERCA	NUT	DADO	ECROU
26	REC688-45987-00	688-45987-01-00	ESPACIADOR	SPACER	DISTANZIALE	ENTRETOISE
27	REC688-45997-00	688-45997-01-00	ESPACIADOR	SPACER	DISTANZIALE	ENTRETOISE
28	REC90201-17M00	90201-17M00-00	ARANDELA	WASHER	RONDELLA	RONDELLE
29	REC90171-16011	90171-16011-00	TUERCA	NUT	DADO	ECROU D'HELICE
30	REC91490-40030	91490-40030-00	PASADOR	PIN	SPINOTTO	GOUPILLE
31	REC6H1-44144-00	6H1-44144-00	VARILLA CAMBIO	SHIFT ROD	ASSE SELETTORE	LEVIER DE VITESSE
32	REC93210-49046	93210-49046-00	ANILLO	O-RING	O-RING	JOINT TORIQUE
33	REC93106-09014	93106-09014-00	RETÉN	OIL SEAL	PARAOLIO	JOINT SPI
34	REC93315-325V1	93315-325V1-00	RODAMIENTO	BEARING	CUSCINETTO	ROULEMENT
35	REC93332-000U3	93332-000U3-00	RODAMIENTO	BEARING	CUSCINETTO	ROULEMENT
36	REC90280-04M04	90280-04M04-00	CHAVETA	KEY	CHIAVETTA	CLAVETTE
37	REC93101-25M03	93101-25M03-00	RETÉN	OIL SEAL	PARAOLIO	JOINT SPI
38	REC93210-46044	93210-46044-00	ANILLO, BASE	O-RING	O-RING	JOINT TORIQUE
39	REC688-44316-00	688-44316-A0-00	JUNTA, BASE	GASKET	GUARNIZIONE	JOINT
40	REC688-44341-01	688-44341-01-94	BASE, BOMBA AGUA	HOUSING WATER PUMP	BASE POMPA ACQUA	BASE DE POMPE A EAU
41	REC688-44324-00	688-44324-A0-00	JUNTA	GASKET	GUARNIZIONE	JOINT
42	REC688-44323-00	688-44323-00-00	PLATO	PLATE	PIASTRA	PLAQUE DE POMPE A EAU
43	REC688-44315-00	688-44315-A0-00	JUNTA	GASKET	GUARNIZIONE	JOINT
44	REC688-44352-03	688-44352-03-00	TURBINA	IMPELLER	GIRANTE	TURBINE
45	REC688-44322-00	688-44322-00-00	ACOPLAMIENTO INOX.	INSERT	BOCCOLA INOX.	INSERT DE POMPE A EAU
46	REC688-44311-01	688-44311-01-00	CUERPO BOMBA AGUA	HOUSING	CORPO POMA ACQUA	CORPS DE POMPE A EAU
47	REC97395-08070	97395-08070-00	TORNILLO	BOLT	VITE	VIS
48	REC663-44366-00	663-44366-00	RETÉN	SEAL	PARAOLIO	BAGUE
49	REC90430-12072	90430-12072-00	JUNTA	GASKET	GUARNIZIONE	JOINT

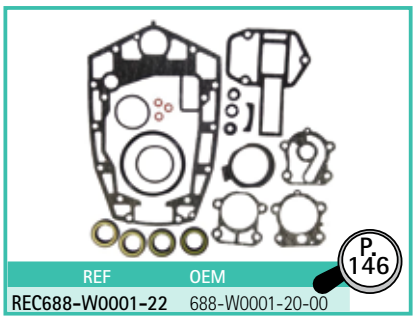

REF	OEM
REC688-W0001-22	688-W0001-20-00

P. 146



REF	OEM
REC692-W0078-02	692-W0078-(00/01)-00

P. 152



REF
REC80W90U3
REC80W90U6
RECGREU1
RECGREU12

P. 43

2T STROKES 115B/C/CETO/TXRZ/TLRA • 130BETO/TLRA/TLRZ (V4)

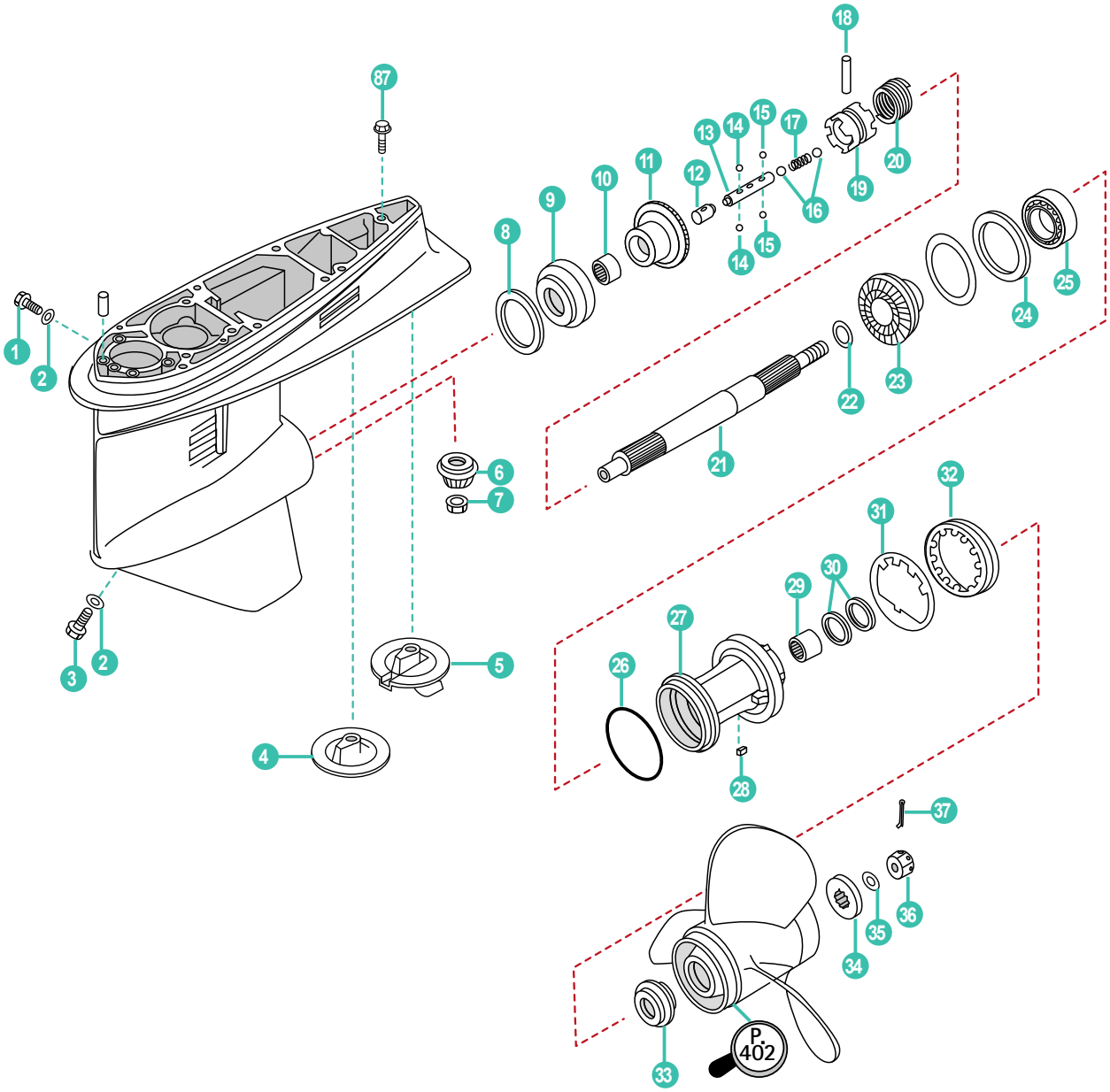



REF	OEM
REC6N6-W0078-02	6E5-W0078-02

P. 152

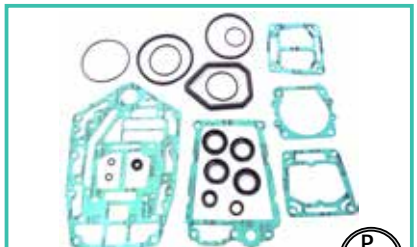

REF	OEM
REC6E5-W0001-F1	6E5-W0001-F1

P. 147



REF
REC80W90U3
REC80W90U6
RECGREU1
RECGREU12

P. 158

	REF	OEM				
	REC405-A20	6E5-45300-16-8D	COLA COMPLETA	LOWER UNIT ASSY	PIEDE COMPLETO	EMBASE COMPLETE
	REC405-A25	6E5-45300-26-8D	COLA COMPLETA	LOWER UNIT ASSY	PIEDE COMPLETO	EMBASE COMPLETE
1	REC90340-08002	90340-08M04	TAPÓN	PLUG, STRAIGHT SCREW	TAPPO	BOUCHON DE VIDANGE
2	REC90430-08020	90430-08020	JUNTA	GASKET	GUARNIZIONE	JOINT
3	REC688-45341-00	688-45341-00	TAPÓN	PLUG DRAIN	TAPPO	BOUCHON DE VIDANGE
4	REC6E5-45371-01	6E5-45371-01	ZINC HÉLICE ALU	TAB-TRIM	ZINCO ELICA ALLU.	ANODE
5	TEN01153	6E5-45371-10	ZINC HÉLICE INOX	TAB-TRIM	ZINCO ELICA INOX.	ANODE
6	REC6E5-45551-00	6E5-45551-02	ENGRANAJE	PINION	PIGNONE	PIGNON
7	REC90170-16M01	90170-16M01	TUERCA	NUT	DADO	ECROU
8	REC6E5-45567-01	6E5-45567-01-60	KIT GRUESO	SHIM SET	KIT SPESSORE	KIT CALE
9	REC93332-000U7	93332-000U7	RODAMIENTO	BEARING	CUSCINETTO	ROULEMENT
10	REC93315-425U7	93315-425U7	RODAMIENTO	BEARING	CUSCINETTO	ROULEMENT
11	REC6E5-45560-00	6E5-45560-01	ENGRANAJE	PINION	PIGNONE	PIGNON
12	REC6E5-45641-03	6E5-45641-02	BULÓN	SHIFTER	BULLONE	PISTON
13	REC6E5-45634-01	6E5-45634-01	PASADOR DESPLAZABLE	SLIDE, SHIFT	PASSANTE	DOUILLE
14	REC93507-32031	93507-32031	BOLA	BALL	BOLLA	BILLE
15	REC93503-16003	93503-16003	BOLA	BALL	BOLLA	BILLE
16	REC93511-32027	93511-32027	BOLA	BALL	BOLLA	BILLE
17	REC90501-16M37	90501-16M37	MUELLE	SPRING, COMPRESSION	MOLLA	RESSORT
18	REC90250-08M07	90250-08M07	PASADOR	PIN STRAIGHT	SPINOTTO	PIN
19	REC6E5-45631-00	6E5-45631-01	DESPLAZABLE	CLUTCH, DOG	SCORREVOLE	CRABOT
20	REC6E5-45633-01	6E5-45633-01	ARILLO METÁLICO	RING, CROSS PIN	O-RING	JOINT TORIQUE
21	REC6E5-45611-00	6E5-45611-01	EJE HÉLICE	SHAFT, PROPELLER	ASSE ELICA	ARBRE D'HELICE
22	REC90201-30M92	90201-30M92	ARANDELA	WASHER, PLATE	RONDELLA	RONDELLE
23	REC6E5-45570-00	6E5-45571-01	ENGRANAJE	PINION	PIGNONE	PIGNON
24	REC6E5-45576-00	6E5-45576-00	ARANDELA	WASHER, THURST	RONDELLA	RONDELLE
25	REC93306-208U0	93306-208U0	RODAMIENTO	BEARING	CUSCINETTO	ROULEMENT
26	REC93210-86M39	93210-86M39	ARO TÓRICO	O-RING	O-RING	JOINT TORIQUE
27	REC6E5-45332-00-94	6E5-45332-00-94	CUERPO COJINETE	HOUSING, BEARING	CUSCINETTO	DIABOLO
28	REC90282-04010	90282-04010	CHAVETA	KEY, STRAIGHT	CHIAVETTA	CLAVETTE
29	REC93315-430U8	93315-430U8	RODAMIENTO	BEARING	CUSCINETTO	ROULEMENT
30	REC93101-30M17	93101-30M17	RETÉN	OIL SEAL	PARAOLIO	JOINT SPI
31	REC688-45383-01	688-45383-02	ARANDELA	WASHER, CLAW	RONDELLA	RONDELLE
32	REC688-45384-00	688-45384-00	TUERCA	NUT	DADO	ECROU
33	REC6E5-45987-00	6E5-45987-01	SEPARADOR	SPACER	SPESSORE	ENTRETOISE
34	REC688-45997-00	688-45997-01	SEPARADOR	SPACER	SPESSORE	ENTRETOISE
35	REC92990-18200	92990-18200	ARANDELA	WASHER	RONDELLA	RONDELLE
36	REC90171-18M04	90171-18M04	TUERCA HÉLICE	NUT, CASTLE	DADO	ECROU D'HELICE
37	REC91490-40030	91490-40030	PASADOR ALETA	PIN, COTTER	SPINOTTO	GOUPILLE
38	PAT85-00000012	90105-10M00	TORNILLO	SCREW	VITE	VIS

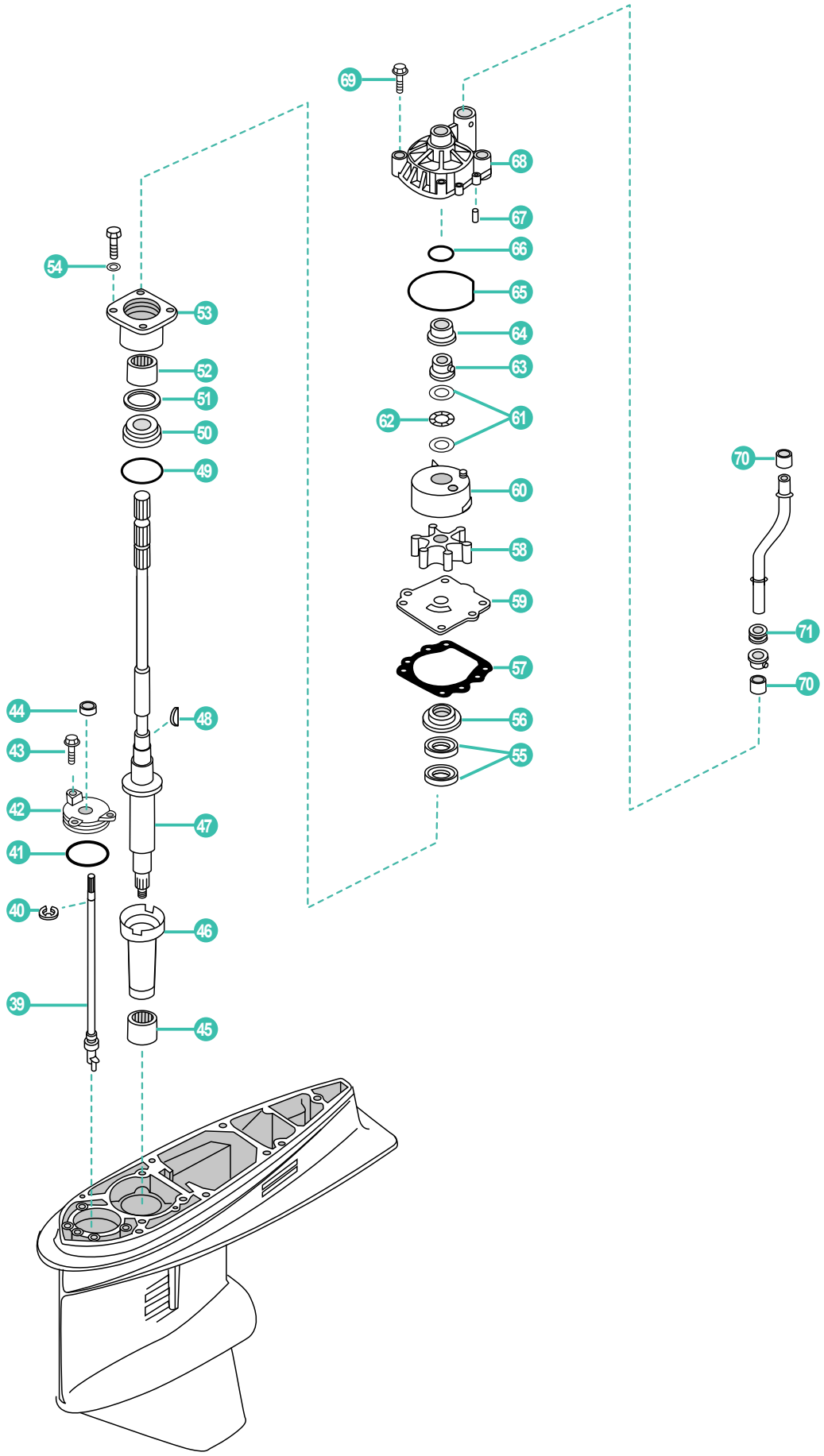
69
68
67
66
65
64
63
62
61
60
58
59
57
56
55
54
53
52
51
50
49
44
43
42
41
40
39
48
47
46
45
70
71
70

	REF	OEM				
39	REC6E5-44150-02	6E5-44150-01	EJE SELECTOR	SHIFT CAM ASSY.	ASSE SELETTORE	ARBRE SELECTEUR
40	REC99001-08600-00	99001-08600	CLIP	CLIP	CLIP	CLIP
41	REC93210-58677	93210-58144	ARO TÓRICO	O-RING	O-RING	JOINT TORIQUE
42	REC6E5-45321-00	6E5-45321-00	PLATO	PLATE	PIASTRA	PLAQUE
43	REC90119-06M10	90119-06M10	TORNILLO	BOLT WITH WASHER	VITE	VIS
44	REC93106-09014	93106-09014	RETÉN	OIL SEAL	PARAOLIO	JOINT SPI
45	REC93315-628U9	93315-628U9	RODAMIENTO	BEARING	CUSCINETTO	ROULEMENT
46	REC6E5-45536-00	6E5-45536-00	CAMISA	SLEEVE	CAMICIA	TUBE GUIDE
47	REC6E5-45501-01	6E5-45501-01	EJE VERTICAL S	DRIVE SHAFT COMP.	ASSE VERTICALE	ARBRE VERTICAL
48	REC90280-04M05	90280-04M05	CHAVETA	KEY, WOODRUF	CHIAVETTA	CLAVETTE
49	REC93210-54534	93210-55M14	ARO TÓRICO	O-RING	O-RING	JOINT TORIQUE
50	REC93341-930V2	93341-930V2	RODAMIENTO	BEARING	CUSCINETTO	ROULEMENT
51	REC6E5-45587-01	6E5-45587-01	GRUESO	SHIM	SPESSORE	CALE
52	REC93317-330U2	93317-330U2	RODAMIENTO	BEARING	CUSCINETTO	ROULEMENT
53	REC6E5-45331-00-94	6E5-45331-00-94	CUERPO RODAMIENTO	HOUSING, BEARING	SEDE CUSCINETTO	PALIER DE ROULEMENT
54	PAGB/T97.1-8	92995-08600	ARANDELA	WASHER	RONDELLA	RONDELLE
55	REC93101-28M16	93101-28M16	RETÉN	OIL SEAL	PARAOLIO	JOINT SPI
56	REC6E5-45344-00	6E5-45344-00	TAPA RETÉN	COVER, OIL SEAL	COPERCHIO	COUVERCLE JOINT SPI
57	REC6E5-44315-A0	6E5-44315-A0	JUNTA BOMBA	GASKET, WATER PUMP	GUARNIZIONE	JOINT
58	REC6E5-44323-00-40	6E5-44323-00	PLATO	OUTTER PLATE, CARTRIDGE	PIASTRA	TURBINE
59	REC6E5-44352-01	6E5-44352-01	TURBINA	IMPELLER	GIRANTE	PLAQUE DE POMPE A EAU
60	REC61A-44322-02	61A-44322-02	CASQUILLO INOX	INSERT, CARTRIDGE	BOCCOLA INOX.	INSERT DE POMPE A EAU
61	REC90201-22M01	90201-22M01	ARANDELA	WASHER	RONDELLA	RONDELLE
62	REC90206-22M19	90206-22M19	ARANDELA	WASHER	RONDELLA	RONDELLE
63	REC61A-45538-00	61A-45538-00	ESPACIADOR	SPACER	DISTANZIALE	ENTRETOISE
64	REC61A-45527-00	61A-45527-00	CASQUILLO	COLLAR, DRIVE SHAFT	BOCCOLA	GUIDE
65	REC93210-86M38	93210-86M38	ARO TÓRICO	O-RING	O-RING	JOINT TORIQUE
66	REC93210-37160	93210-37160	ARO TÓRICO	O-RING	O-RING	JOINT TORIQUE
67	REC93606-12019	93606-12019	PIN CENTRADOR	PIN DOWEL	SPINOTTO	PIN
68	REC61A-44311-00	61A-44311-01	CUERPO BOMBA	HOUSING, WATER PUMP	CORPO POMPA	CORPS DE POMPE A EAU
69	REC90119-08M14	90119-08M14	TORNILLO	BOLT, WITH WASHER	VITE	VIS
70	REC6E5-44365-00	6E5-44365-00	CASQUILLO GOMA	DAMPER	BOCCOLA	BAGUE
71	REC6E5-44366-00	6E5-44366-00	CASQUILLO GOMA	DAMPER	BOCCOLA	BAGUE

2T STROKES V6 (1984+)

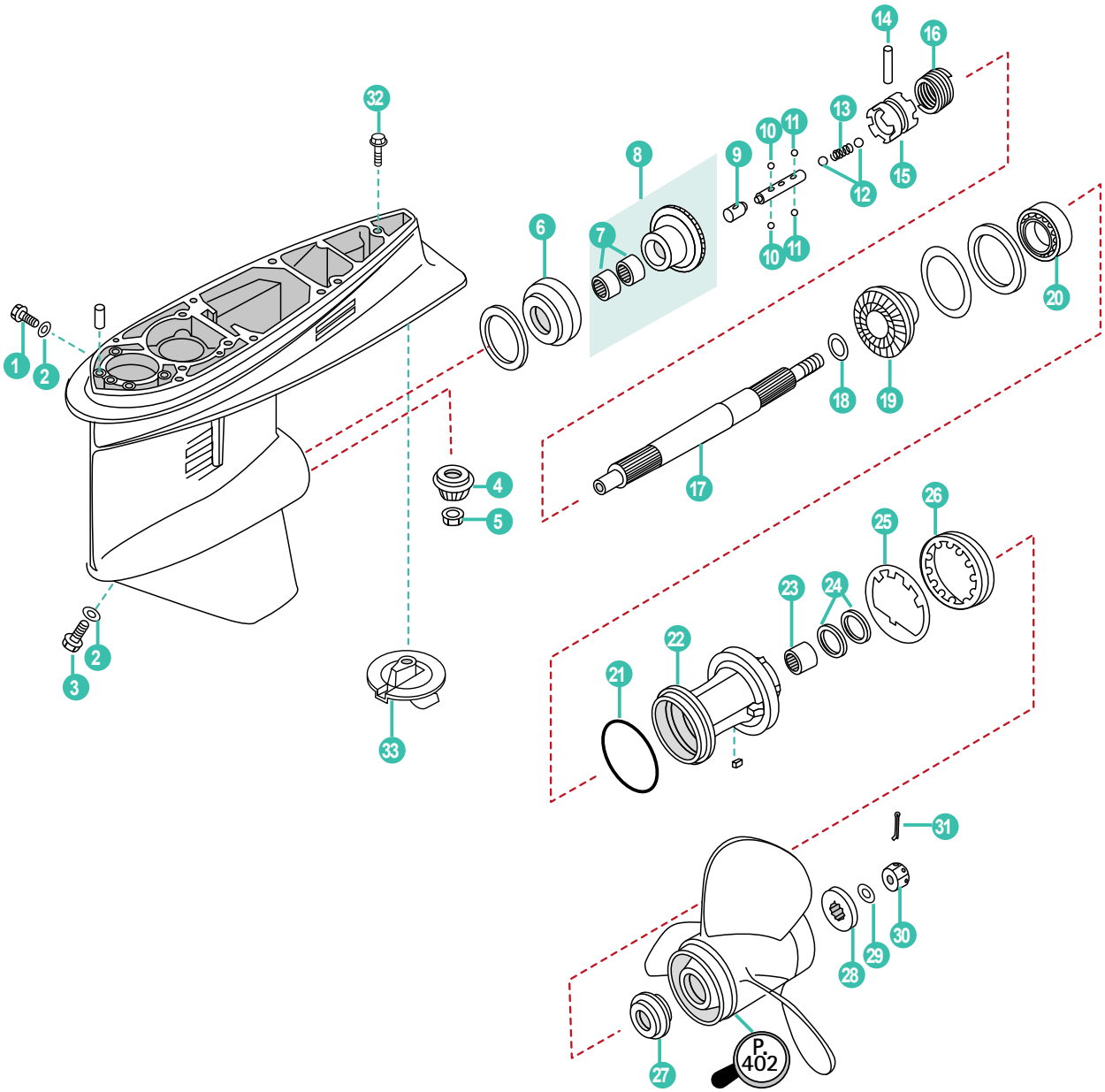



REF	OEM
REC6G5-W0078-A1	6G5-W0078-A1

P. 152



REF	OEM
REC6E5-W0001-F1	6E5-W0001-F1

P. 147



REF
REC80W90U3
REC80W90U6
RECGREU1
RECGREU12

P. 43

	REF	OEM				
	REC416-A20	64D-45300-02-8D	COLA COMPLETA	LOWER UNIT ASSY 20"	PIEDE COMPLETO	EMBASE COMPLETE 20"
	REC416-A25	64D-45300-22-8D	COLA COMPLETA	LOWER UNIT ASSY 25"	PIEDE COMPLETO	EMBASE COMPLETE 25"
1	REC90340-08002	90340-08002	TAPÓN	PLUG, STRAIGHT SCREW	TAPPO	BOUCHON DE VIDANGE
2	REC90430-08020	90430-08020	JUNTA	GASKET	GUARNIZIONE	JOINT
3	REC688-45341-00	688-45341-10	TAPÓN	PLUG, DRAIN	TAPPO	BOUCHON DE VIDANGE
4	REC6G5-45551-00	6G5-45551-01	ENGRANAJE	PINION	PIGNONE	PIGNON
5	REC90170-16M01	93170-16M01	TUERCA	NUT	DADO	ECROU
6	REC93332-000V3	93332-000V3	RODAMIENTO	BEARING	CUSCINETTO	ROULEMENT
7	REC93315-425V3	93315-425V3	RODAMIENTO	BEARING	CUSCINETTO	ROULEMENT
8	REC6G5-45560-00	6G5-45560-01	ENGRANAJE	GEAR	INGRANAGGIO	PIGNON
9	REC6E5-45641-03	6E5-45641-03	PITOT	PITOT	PITOT	PITOT
10	REC93507-32031	93507-32031	BOLA	BALL	BOLLA	BILLE
11	REC93503-16003	93503-16003	BOLA	BALL	BOLLA	BILLE
12	REC93511-32027	93511-32027	BOLA	BALL	BOLLA	BILLE
13	REC90501-16M37	90501-16M37	MUELLE	SPRING	MOLLA	RESSORT
14	REC90250-08M07	90250-08M07	PASADOR	PIN, STRAIGHT	SPINOTTO	CLAVETTE
15	REC6G5-45631-00	6G5-45631-00	DESPLAZABLE	CLUTCH, DOG	SCORREVOLE	CRABOT
16	REC6E5-45633-01	6E5-45633-01	ANILLO	RING, CROSS PIN	O-RING	JOINT TORIQUE
17	REC6J9-45611-00	6J9-45611-01	EJE HÉLICE	SHAFT, PROPELLER	ASSE ELICA	ARBRE D'HELICE
18	REC90201-30M92	90201-30M92	ARANDELA	WASHER, PLATE	RONDELLA	RONDELLE
19	REC6G5-45571-00	6G5-45571-02	ENGRANAJE	GEAR	INGRANAGGIO	PIGNON
20	REC93306-209U0	93306-209U0	RODAMIENTO	BEARING	CUSCINETTO	ROULEMENT
21	REC93210-97M55	93210-97M55	ARO TÓRICO	O-RING	O-RING	JOINT TORIQUE
22	REC6J9-45332-00-CA	6J9-45332-00-CA	DIÁBOLO	BEARING CARRIER	COP. CASSA INGRANAGGI	DIABOLO
23	REC93315-43061	93315-43061	RODAMIENTO	BEARING	CUSCINETTO	ROULEMENT
24	REC93101-30M17	93101-30M17	RETÉN	OIL SEAL	PARAOLIO	JOINT SPI
25	REC6G5-45383-01	6G5-45383-01	ARANDELA	WASHER, CLAW	RONDELLA	RONDELLE
26	REC6G5-45384-00	6G5-45384-00	TUERCA	NUT	DADO	ECROU
27	REC6E5-45987-00	6E5-45978-01	ESPACIADOR	SPACER	DISTANZIALE	ENTRETOISE
28	REC688-45997-00	688-45997-01	ESPACIADOR	SPACER	DISTANZIALE	ENTRETOISE
29	REC92990-18200	92990-18200	ARANDELA	WASHER	RONDELLA	RONDELLE
30	REC90171-18M04	90171-18M04	TUERCA	NUT, CASTLE	DADO	ECROU D'HELICE
31	REC91490-40030	91490-40030	PASADOR	PIN, COTTER	SPINOTTO	GOUPILLE
32	PAT85-00000012	90105-10M00	TORNILLO	SCREW	VITE	VIS
33	CM6E5-45371-01A	6E5-45371-01	ÁNODO	ANODE	ANODO	ANODE

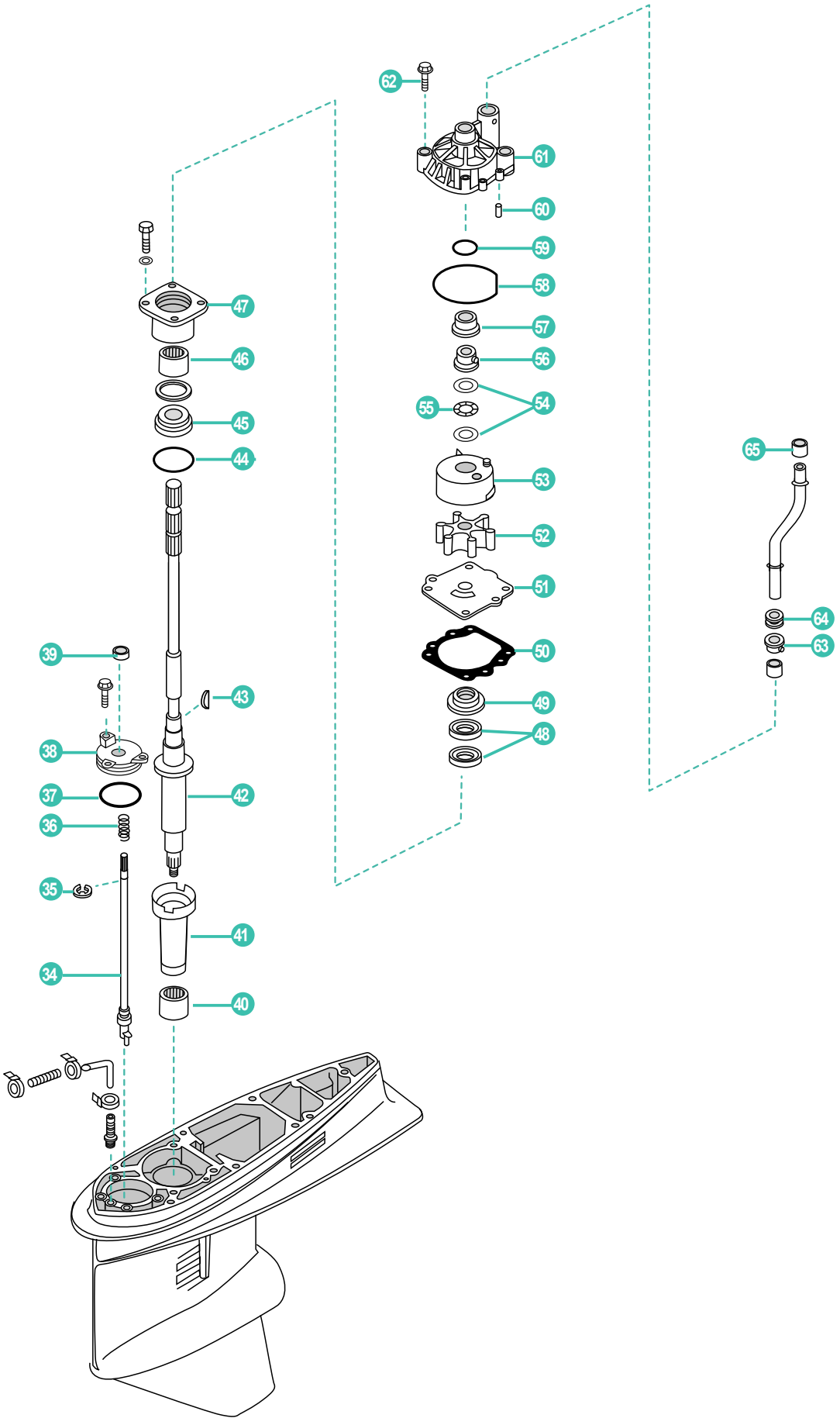
62
61
60
59
58
57
56
55
54
53
52
51
50
49
48
65
64
63
47
46
45
44
43
42
41
40
39
38
37
36
35
34

	REF	OEM				
34	REC6G5-44150-02	6G5-44150-02	EJE CAMBIO	SHIFT SHAFT	ASSE CAMBIO	LEVIER DE VITESSE
35	REC99001-08600-00	99001-08600	CLIP	BEARING	CUSCINETTO	ROULEMENT
36	REC90501-11M10-00	90501-11M10	MUELLE	SPRING	MOLLA	RESSORT
37	REC93210-58677	93210-58144	ARO TÓRICO	O-RING	O-RING	JOINT TORIQUE
38	REC6E5-45321-00	6E5-45321-00	TAPA EJE	SHIFT COVER	COPERCHIO ASSE	COUVERCLE
39	REC93106-09014	93106-09014	RETÉN	OIL SEAL	PARAOLIO	JOINT SPI
40	REC93311-928U5	93311-928U5	RODAMIENTO	BEARING	CUSCINETTO	ROULEMENT
41	REC6G5-45536-01	6G5-45536-01	CAMISA	LUBE SLEEVE	CAMICIA	DOUILLE
42	REC6G5-45501-21	6G5-45501-21	EJE	DRIVE SHAFT COMP. 25"	ASSE VERTICALE	ARBRE VERTICAL
43	REC90280-04M05	90280-04M05	CHAVETA	KEY, WOODRUFF	CHIAVETTA	CLAVETTE
44	REC93210-54534	93210-55M14	ARO TÓRICO	O-RING	O-RING	JOINT TORIQUE
45	REC93341-930V2	93341-930V2	RODAMIENTO	BEARING	CUSCINETTO	ROULEMENT
46	REC93317-330U2	93317-330U2	RODAMIENTO	BEARING	CUSCINETTO	ROULEMENT
47	REC6E5-45331-00-94	6E5-45331-00-94	CUERPO RODAMIENTO	HOUSING, BEARING	SEDE CUSCINETTO	PALIER DE ROULEMENT
48	REC93101-28M16	93101-28M16	RETÉN	OIL SEAL	PARAOLIO	JOINT SPI
49	REC6E5-45344-00	6E5-45344-00	TAPA RETÉN	COVER, OIL SEAL	COPERCHIO	COUVERCLE JOINT SPI
50	REC6E5-44315-A0	6E5-44315-A0	JUNTA	GASKET, WATER PUMP	GUARNIZIONE	JOINT DE POMPE A EAU
51	REC6G5-44323-00	6G5-44323-00	PLATO	OUTER PLATE, CARTRIDGE	PIASTRA	PLAQUE DE POMPE A EAU
52	REC6E5-44352-01	6E5-44352-01	TURBINA	IMPELLER	GIRANTE	TURBINE
53	REC61A-44322-02	61A-44322-02	CASQUILLO INOX. –ANTIGUA–	INSERT, CARTRIDGE	BOCCOLA INOX.	INSERT DE POMPE A EAU ANCIEN MODELE
	REC6E5-44322-00	6E5-44322-00	CASQUILLO INOX. –MODERNA–	INSERT, CARTRIDGE	BOCCOLA INOX.	INSERT DE POMPE A EAU NOUVEAU MODELE
54	REC90206-22M19	90206-22M19	ARANDELA	WASHER	RONDELLA	RONDELLE
55	REC90201-22M01	90201-22M01	ARANDELA	WASHER	RONDELLA	RONDELLE
56	REC61A-45538-00	61A-45538-00	ESPACIADOR	SPACER	DISTANZIALE	ENTRETOISE
57	REC61A-45527-00	61A-45527-00	GOMA	COLLAR	GOMMA	BAGUE
58	REC93210-86M38	93210-86M38	ARO TÓRICO	O-RING	O-RING	JOINT TORIQUE
59	REC93210-37160	93210-37160	ARO TÓRICO	O-RING	O-RING	JOINT TORIQUE
60	REC93606-12019	93606-12019	CENTRADOR	PIN, DOWEL	SPINOTTO	PIN
61	REC61A-44311-00	61A-44311-01	CUERPO BOMBA AGUA –ANTIGUA–	HOUSTING, WATER PUMP	CORPO POMPA ACQUA	CORPS DE POMPE A EAU ANCIEN MODELE
	REC6E5-44311-00	6E5-44311-00	CUERPO BOMBA AGUA –MODERNA–	HOUSTING, WATER PUMP	CORPO POMPA ACQUA	CORPS DE POMPE A EAU NOUVEAU MODELE
62	REC90119-08M14	90119-08M14	TORNILLO	BOLT, WITH WASHER	VITE	VIS
63	REC6E5-44365-00	6E5-44365-00	CASQUILLO GOMA	DAMPER, WATER SEAL	BOCCOLA GOMMA	BAGUE
64	REC6E5-44366-00	6E5-44366-00	SELLO GOMA AGUA	DAMPER, WATER SEAL	BOCCOLA	BAGUE
65	REC6E5-44365-00	6E5-44365-00	SELLO GOMA AGUA	DAMPER, WATER SEAL	BOCCOLA	BAGUE

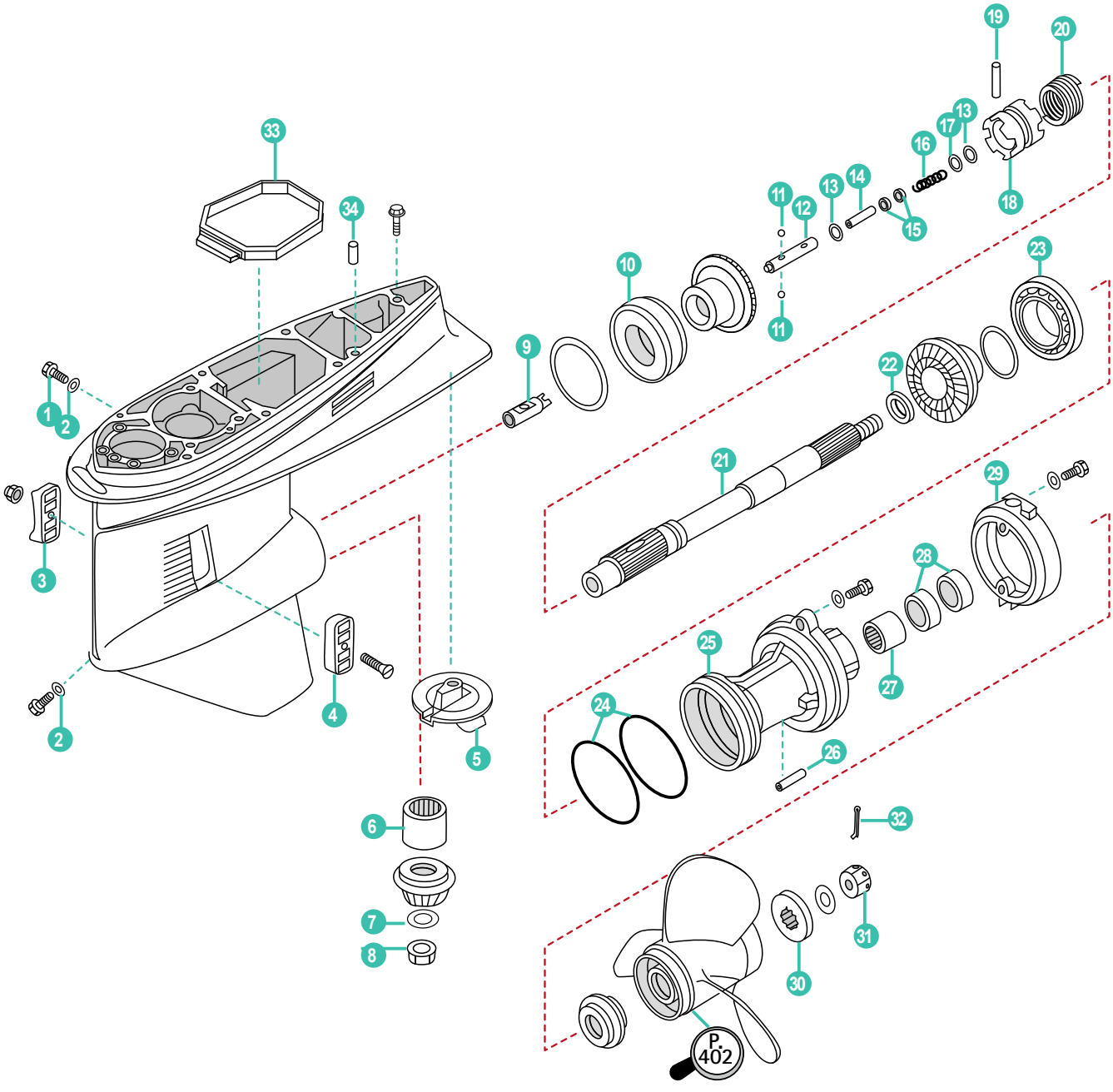
1
2
3
2
4
5
6
7
8
33
34
9
10
11
12
13
14
15
16
17
13
18
19
20
11
23
22
21
29
28
25
27
24
26
32
31
30
P. 402

	REF	OEM				
1	REC90340-08002	90340-08002	TORNILLO	VENT PLUG	VITE	BOUCHON DE VIDANGE
2	REC90430-08020	90430-08020	JUNTA	GASKET, DRAIN PLUG	GUARNIZIONE	JOINT
3	REC61A-45215-10	61A-45215-10	FILTRO TAPA	WATER SCREEN, STARBOARD	COPERCHIO FILTRO	GRILLE D'ENTREE D'EAU
4	REC61A-45214-10	61A-45214-10	FILTRO TAPA	WATER SCREEN, PORT	COPERCHIO FILTRO	GRILLE D'ENTREE D'EAU
5	CM61A-45371	61A-45371-00	ÁNODO TIMÓN	TRIM TAB	ANODO	ANODE
6	REC93311-83280	93311-83280	RODAMIENTO	BEARING	CUSCINETTO	ROULEMENT
7	REC90201-16M00	90201-16M00	ARANDELA	WASHER	RONDELLA	RONDELLE
8	REC90170-16M19	90170-16M19	PIÑÓN TUERCA	PINION NUT	PIGNONE, DADO	ECROU
9	REC61A-45641-02	61A-45641-02	DESPLAZABLE	SHIFTER	SCORREVOLE	DOUILLE
10	REC93332-000W1	93332-000W1	RODAMIENTO	BEARING, FORWARD GEAR	CUSCINETTO	ROULEMENT
11	REC93501-04011	93501-04011	BOLA	DETENT BALL	BOLLA	BILLE
12	REC61A-45634-01	61A-45634-01	DESPLAZABLE	SHIFT SLIDE	SCORREVOLE	DOUILLE
13	REC90183-02M03	90183-02M03	TUERCA	NUT	DADO	ECROU
14	REC6H1-45668-00	6H1-45668-00	EJE	FREE SHAFT	ASSE	ARBRE
15	REC61A-45635-00	61A-45635-00	GRUESO	SHIFT PLUNGER	SPESSORE	CALE
16	REC90501-10M77	90501-10M77	MUELLE	COMPRESSION SPRING	MOLLA	RESSORT
17	REC90201-02M00	90201-02M00	ARANDELA	PLATE WASHER	RONDELLA	RONDELLE
18	REC61A-45631-03	61A-45631-03	SELECTOR	CLUTCH, 2 STROKE	SELETTORE	CRABOT
19	REC61A-45632-00	61A-45632-00	PASADOR	CROSS PIN	SPINOTTO	CLAVETTE
20	REC61A-45633-00	61A-45633-00	MUELLE	SPRING	MOLLA	RESSORT
21	REC60V-45611-00	60V-45611-00	EJE HÉLICE	PROP SHAFT	ASSE ELICA	ARBRE D'HELICE
22	REC90201-31M00	90201-31M00	ARANDELA	WASHER	RONDELLA	RONDELLE
23	REC93306-210U0	93306-210U0	RODAMIENTO MARCHA ATRÁS	BEARING, REVERSE GEAR	CUSCINETTO MARCIA IND.	PIGNON DE MARCHE ARRIERE
24	REC93211-04384	93211-04384	ARO TÓRICO	O-RING, BEARING CARRIER	O-RING	JOINT TORIQUE
25	REC60V-45332-00-94	60V-45332-00-94	DIÁBOLO	BEARING CARRIER	COP. CASSA INGRANAGGI	DIABOLO
26	REC99590-10114	99590-10114	PIN CENTRADO	ALIGNMENT DOWEL	SPINOTTO	PIN ROULEMENT
27	REC93315-43061	93315-43061	RODAMIENTO	PROP SHAFT BEARING	CUSCINETTO	ROULEMENT
28	REC93101-30M17	93101-30M17	RETÉN	PROP SHAFT SEAL	PARAOLIO	JOINT SPI
29	REC69J-45361-00-8D	69J-45361-00-8D	FUNDA INFERIOR	CAP, LOWER CASING	COPERCHIO INFERIORE	COUVERCLE INFERIEUR
30	REC688-45997-00	688-45997-00	ESPACIADOR	SPACER	SPESSORE	ENTRETOISE
31	REC90171-18M04	90171-18M04	TUERCA	PROP NUT	DADO	ECROU D'HELICE
32	REC91490-40030	91490-40030	PIN	COTTER PIN	SPINOTTO	GOUPILLE
33	REC69J-45375-00	69J-45375-00	JUNTA ESCAPE	EXHAUST DAMPER	GUARNIZIONE1	JOINT D'ECHAPPEMENT
34	REC93608-12M05	93608-12M05	PIN	ALIGNMENT DOWELS	SPINOTTO	PIN

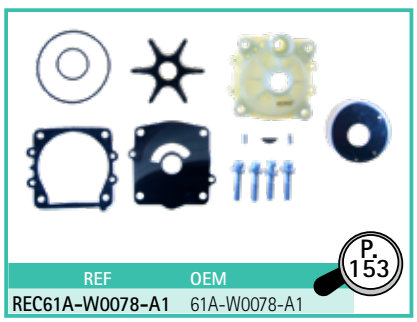

P. 153

REF	OEM
REC61A-W0078-A1	61A-W0078-A1



P. 43

REF
REC80W90U3
REC80W90U6
RECGREU1
RECGREU12

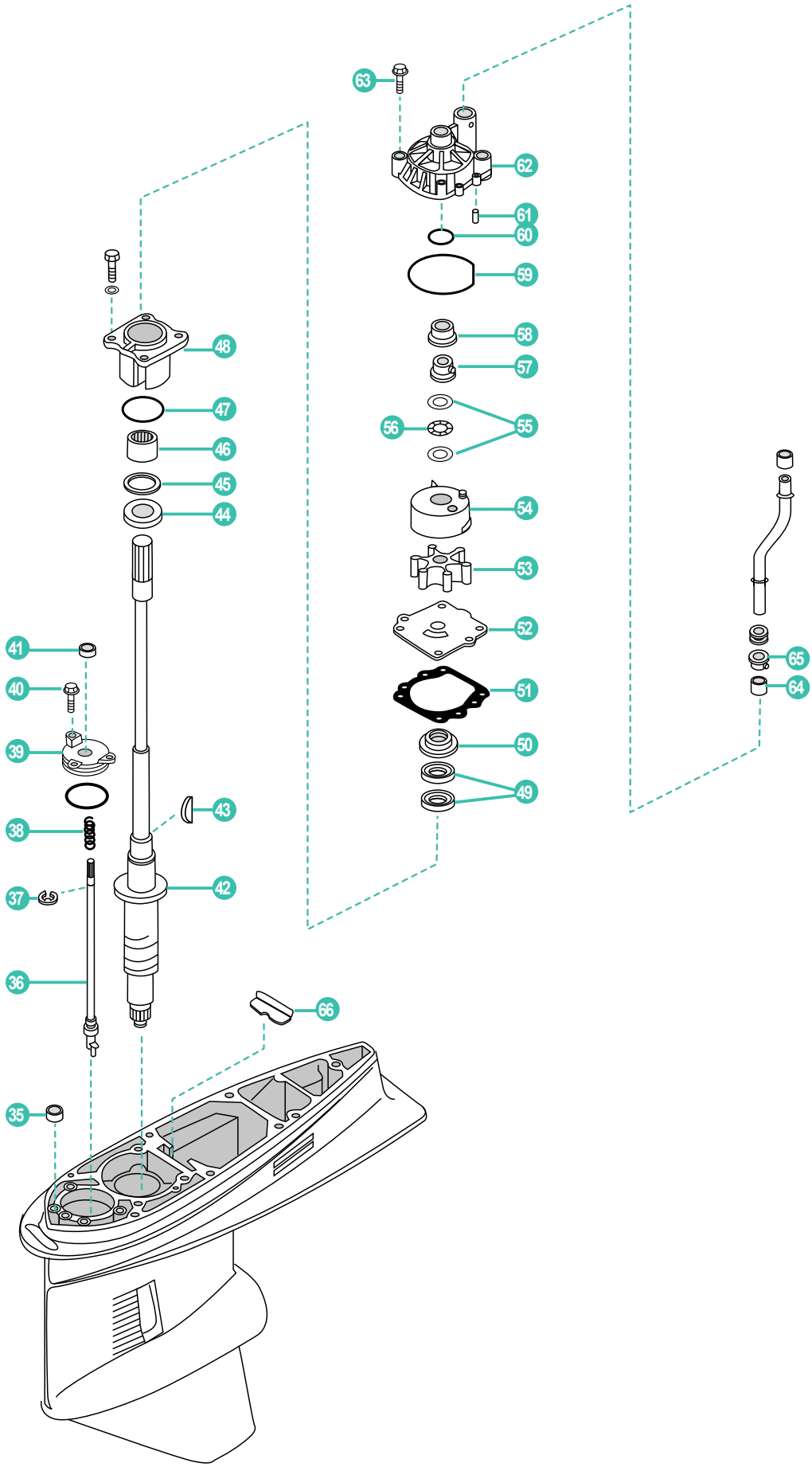
63
62
61
60
59
58
57
56
55
54
53
52
51
50
49
48
47
46
45
44
43
42
41
40
39
38
37
36
35
66
65
64

	REF	OEM				
35	REC663-44366-00	663-44366-00	GOMA	SEAL	GOMMA	BAGUE
36	REC60V-44150-00	60V-44150-00	EJE	SHIFT SHAFT	ASSE	LEVIER DE VITESSE
37	REC99001-08600-00	99001-08600	CLIP	CLIP	CLIP	CLAVETTE
38	REC90501-11M10-00	90501-11M10	MUELLE	SPRING	MOLLA	RESSORT
39	REC61A-45321-01	61A-45321-01	TAPA	SHIFT SHAFT COVER	COPERCHIO ASSE	COUVERCLE
40	REC90119-06M10	90119-06M10	TORNILLO	BOLT	VITE	VIS
41	REC93106-09014	93106-09014	RETÉN	SEAL, SHIFT ROD	BOCCOLA	JOINT
	REC66K-45501-00	66K-45501-00	EJE	DRIVE SHAFT, 20"	ASSE VERTICALE	ARBRE VERTICAL 20''
42	REC61A-45501-20	61A-45501-20	EJE	DRIVE SHAFT, 25"	ASSE VERTICALE	ARBRE VERTICAL 25''
	REC61A-45501-30	61A-45501-30	EJE	DRIVE SHAFT, 30"	ASSE VERTICALE	ARBRE VERTICAL 30''
43	REC90280-04M05	90280-04M05	CHAVETA	WOODRUFF KEY	CHIAVETTA	CLAVETTE
44	REC93341-93020	93341-93020	GRUESO RODAMIENTO	THRUST BEARING	SPESSORE CUSCINETTO	CALE
45	REC61A-45587-00/60-0	61A-45587-00/60	ESPACIADOR	SHIM KIT	SPESSORE	ENTRETOISE
46	REC93317-330U2	93317-330U2	RODAMIENTO	BEARING	CUSCINETTO	ROULEMENT
47	REC93210-54534	93210-54534	ARO TÓRICO	O-RING	O-RING	JOINT TORIQUE
48	REC61A-45331-00-94	61A-45331-00-94	CUERPO EJE	DRIVE SHAFT BEARING HOUSING	CORPO ASSE	PALIER DE ROULEMENT
49	REC93101-28M16	93101-28M16	RETÉN	DRIVE SHAFT SEAL	BOCCOLA	JOINT SPI
50	REC6E5-45344-00	6E5-45344-00	RETÉN	COVER, DRIVE SHAFT SEALS	BOCCOLA	COUVERCLE DE JOINT SPI
51	REC6E5-44315-A0	6E5-44315-A0	JUNTA BASE	BASE GASKET	GUARNIZIONE	JOINT
52	REC6G5-44323-00	6G5-44323-00	BASE BOMBA	WEAR PLATE	BASE POMPA	PLAQUE DE POMPE A EAU
53	REC6E5-44352-01	6E5-44352-01	TURBINA	IMPELLER	GIRANTE	TURBINE
54	REC61A-44322-02	61A-44322-02	CASQUILLO INOX.	WATER PUMP LINER	BOCCOLA	INSERT DE POMPE A EAU
55	REC90201-22M01	90201-22M01	ARANDELA	WASHER	RONDELLA	RONDELLE
56	REC90206-22M19	90206-22M19	TÓRICA	WAVE WASHER	GUARNIZIONE	JOINT TORIQUE
57	REC61A-45538-00	61A-45538-00	ESPACIADOR	SPACER	DISTANZIALE	ENTRETOISE
58	REC61A-45527-00	61A-45527-00	COLLAR	COLLAR	COLLAR	BAGUE
59	REC93210-86M38	93210-86M38	ARO TÓRICO	O-RING	O-RING	JOINT TORIQUE
60	REC93210-37M67	93210-37M67	ARO TÓRICO	O-RING	O-RING	JOINT TORIQUE
61	REC93606-12019	93606-12019	PASADOR CENTRAL	ALIGNMENT PIN	SPINOTTO	PIN
62	REC61A-44311-00	61A-44311-00	CUERPO BOMBA AGUA	WATER PUMP HOUSING	CORPO POMPA ACQUA	CORPS DE POMPE A EAU
63	REC90119-08M14	90119-08M14	TORNILLO CON ARANDELA	BOLT WITH WASHER	VITE	VIS
64	REC6E5-44365-00	6E5-44365-00	CASQUILLO JUNTA	DAMPER, WATER TUBE	BOCCOLA TUBO	BAGUE
65	REC6E5-44312-00	6E5-44312-00	TAPA	OVER	TAPPO	BAGUE
66	REC61A-45376-00-94	61A-45376-00-94	GUÍA	GUIDE	GUIDE	GUIDE

2T STROKES VZ200 (2005-09) • VZ225 (2003-09) • VZ250 (2003-09) • VZ300 (2004-09)

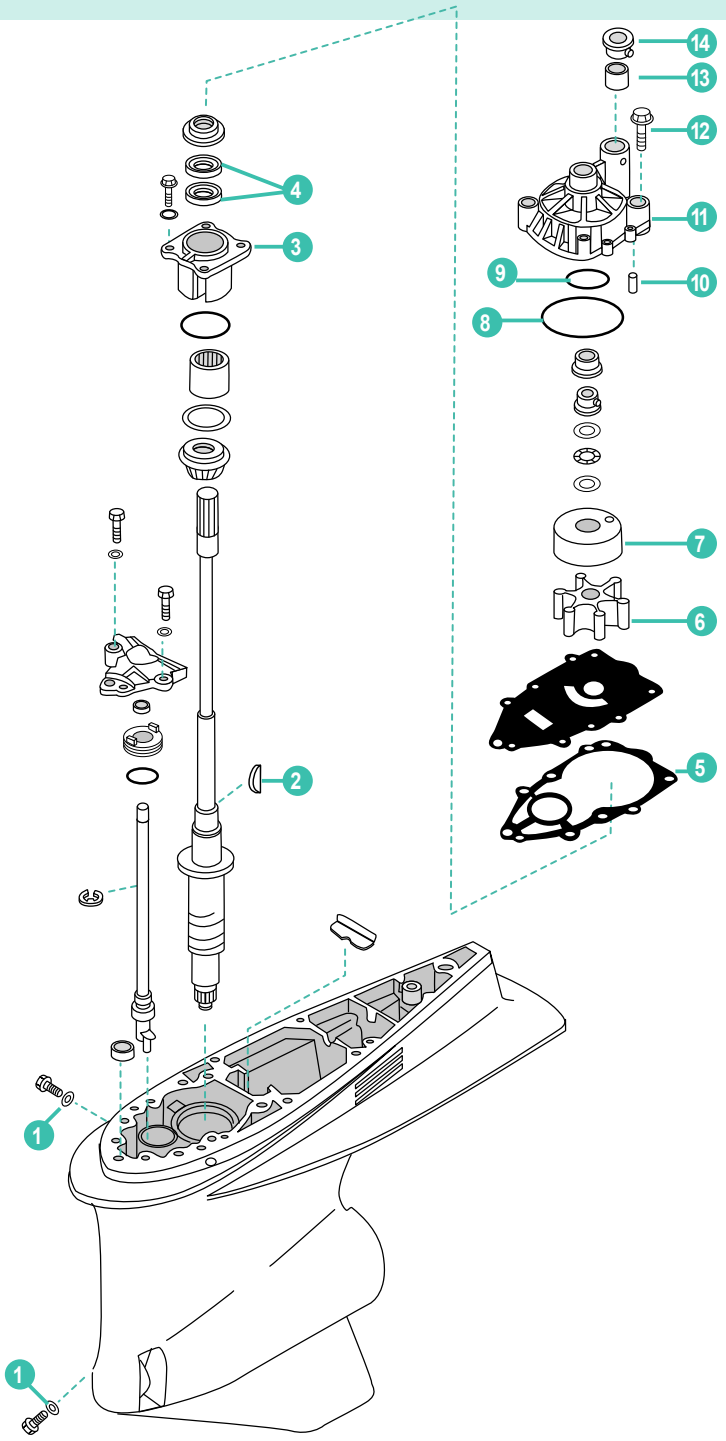



REF
REC80W90U3
REC80W90U6
RECGREU1
RECGREU12

P. 43



REF	OEM
REC60X-W0078-00	60X-W0078-00

P. 153

	REF	OEM				
1	REC90430-08020	93430-08020	JUNTA	GASKET, DRAIN FILL	GUARNIZIONE	JOINT
2	REC90280-04M05	90280-04M05	CHAVETA	KEY, WOODRUFF	CHIAVETTA	CLAVETTE
3	REC61A-45331-00-94	61A-45331-00-94	CUERPO COJINETE EJE	DRIVE SHAFT BEARING HOUSING	CORPO CUSCINETTO	PALIER DE ROULEMENT
4	REC93101-28M16	93101-28M16	RETÉN	OIL SEAL	PARAOLIO	JOINT SPI
5	REC60X-44315-A0	60X-44315-A0	JUNTA	GASKET	GUARNIZIONE	JOINT
6	REC6E5-44352-01	6E5-44352-01	IMPULSOR	IMPELLER	GIRANTE	TURBINE
7	REC61A-44322-02	61A-44322-02	CASQUILLO INOX.	PUMP CUP	BOCCOLA INOX.	INSERT DE POMPE A EAU
8	REC93210-86M38	93210-86M38	ARO TÓRICO	O-RING	O-RING	JOINT TORIQUE
9	REC93210-37M67	93210-37M67	ARO TÓRICO	O-RING	O-RING	JOINT TORIQUE
10	REC93606-12019	93606-42019	PASADOR	PIN, DOWELL	SPINOTTO	PIN
11	REC61A-44311-00	61A-44311-01	CUERPO BOMBA AGUA	WATER PUMP HOUSING	CORPO POMPA ACQUA	CORPS DE POMPE A EAU
12	REC90119-08M14	90119-08M14	TORNILLO CON ARANDELA	BOLT W WASHER	VITE	VIS
13	REC6E5-44365-00	6E5-44365-00	CASQUILLO GOMA	DAMPER	BOCCOLA GOMMA	BAGUE
13	REC6E5-44312-00	6E5-44312-00	TAPA CUERPO BOMBA AGUA	COVER, WATER PUMP HOUSING	COPERCHIO CORPO POMPA	COUVERCLE

GUÍA PIEZAS COLA STERN DRIVE COMPONENTS GUIDE GUIDA RICAMBI PIEDI GUIDE PIECES D'EMBASE



2B	1981-03	REC646-45551-00	REC646-45560-00							
4A	1985-87	REC6E0-45551-00	REC6E0-45560-00	REC6E0-45570-00	REC6E0-45631-00				PAF4-03050001	REC6E0-45511-01
4AC	1987-99	REC6E0-45551-00	REC6E0-45560-00	REC6E0-45570-00	REC6E0-45631-00				PAF4-03050001	REC6E0-45511-01
4AC MHL 4AC MHS	2001-03	REC6E0-45551-00	REC6E0-45560-00	REC6E0-45570-00	REC6E0-45631-00				PAF4-03050001	REC6E0-45511-11
4AS	1987-96	REC6E0-45551-00	REC6E0-45560-00	REC6E0-45570-00	REC6E0-45631-00				PAF4-03050001	REC6E0-45511-01
4BC	1998-99	REC6E0-45551-00	REC6E0-45560-00	REC6E0-45570-00	REC6E0-45631-00				PAF4-03050001	REC6E0-45511-01
4BC	1999	REC6E0-45551-00	REC6E0-45560-00	REC6E0-45570-00	REC6E0-45631-00				PAF4-03050001	REC6E0-45511-01
4BC MHL 4BC MHS	2001-03	REC6E0-45551-00	REC6E0-45560-00	REC6E0-45570-00	REC6E0-45631-00				PAF4-03050001	REC6E0-45511-11
F4A	1998-00	REC6E0-45551-00	PAF4-03010000	PAF4-03040000					PAF4-03050001	REC6E0-45511-11
F4A MH F4A MHL	2000	REC6E0-45551-00	PAF4-03010000	PAF4-03040000					PAF4-03050001	REC6E0-45511-11
F4A MHS	2001	REC6E0-45551-00	PAF4-03010000	PAF4-03040000					PAF4-03050001	REC6E0-45511-11
5C	1985-99	REC6E0-45551-00	REC6E0-45560-00	REC6E0-45570-00	REC6E0-45631-00				PAF4-03050001	REC6E0-45511-01
5C MHL 5C MHS	2001-06	REC6E0-45551-00	REC646-45560-00	REC6E0-45570-00	REC6E0-45631-00				PAF4-03050001	REC6E0-45511-11
5CS	1987-96	REC6E0-45551-00	REC646-45560-00	REC6E0-45570-00	REC6E0-45631-00					REC6E0-45511-01
6C	1990-98	REC6N0-G5551-00	REC6N0-G5560-00	REC6N0-G5571-00	REC6G1-45631-00		REC6G1-45611-01			
6C MHL 6C MHS	2001-06	REC6N0-G5551-00	REC6N0-G5560-00	REC6N0-G5571-00	REC6G1-45631-00		REC6G1-45611-01			
6C WHL 6C WHS	2001	REC6N0-G5551-00	REC6N0-G5560-00	REC6N0-G5571-00	REC6G1-45631-00		REC6G1-45611-01			
6D	1990-98	REC6N0-G5551-00	REC6N0-G5560-00	REC6N0-G5571-00	REC6G1-45631-00		REC6G1-45611-01			
6D MHL 6D MHS	2001-06	REC6N0-G5551-00	REC6N0-G5560-00	REC6N0-G5571-00	REC6G1-45631-00		REC6G1-45611-01			
6D WHS	2001	REC6N0-G5551-00	REC6N0-G5560-00	REC6N0-G5571-00	REC6G1-45631-00		REC6G1-45611-01			
8C	1990-98	REC6N0-G5551-00	REC6N0-G5560-00	REC6N0-G5571-00	REC6G1-45631-00		REC6G1-45611-01			
8C MHL 8C MHS	2001-06	REC6N0-G5551-00	REC6N0-G5560-00	REC6N0-G5571-00	REC6G1-45631-00		REC6G1-45611-01			
8C MHX	2001-03	REC6N0-G5551-00	REC6N0-G5560-00	REC6N0-G5571-00	REC6G1-45631-00		REC6G1-45611-01			
8C WHL 8C WHS	2001-03	REC6N0-G5551-00	REC6N0-G5560-00	REC6N0-G5571-00	REC6G1-45631-00		REC6G1-45611-01			
E8D	1997-98	REC647-45551-00	REC647-45560-00	REC647-45570-00						
E8D MH	1999	REC647-45551-00	REC647-45560-00	REC647-45570-00						
F8A	1986-89				REC682-45631-00	REC648-45633-00				
F8B	1985-99	REC6E7-45551-00	REC6E7-45560-01	REC6E7-45570-00	REC682-45631-00	REC648-45633-00	REC683-45611-00			
F8B E F8B EH F8B MH	1999	REC6E7-45551-00	REC6E7-45560-01	REC6E7-45570-00	REC682-45631-00	REC648-45633-00	REC683-45611-00			
FT8D EL	2001-04					REC648-45633-00	REC683-45611-00			REC69G-45510-20
FT8D EPL	2001-04					REC648-45633-00	REC683-45611-00			REC69G-45510-10
FT8D EPX	2001-02					REC648-45633-00	REC683-45611-00			REC69G-45510-10
FT8D EX	2001-04					REC648-45633-00	REC683-45611-00			REC69G-45510-20
FT8D MHL FT8D MHX	2001-04					REC648-45633-00	REC683-45611-00			REC69G-45510-10
9.9D	1985-89	REC6E7-45551-00	REC6E7-45560-01	REC6E7-45570-00	REC682-45631-00	REC648-45633-00	REC683-45611-00			REC69G-45510-20
9.9D	1990-95	REC6E7-45551-00	REC6E7-45560-01	REC6E7-45570-00	REC682-45631-00	REC648-45633-00	REC683-45611-00	REC683-45361-02-4D		REC6E7-45501-11
9.9F	1995-99	REC63V-45551-00	REC6E7-45560-01	REC6E7-45570-00	REC682-45631-00	REC648-45633-00	REC683-45611-00	REC683-45361-02-4D		REC63V-45510-01 REC63V-45501-10
9.9F MH	2000	REC63V-45551-00	REC6E7-45560-01	REC6E7-45570-00	REC682-45631-00	REC648-45633-00	REC683-45611-00	REC683-45361-02-4D		REC63V-45510-01 REC63V-45510-11
9.9F MHL 9.9F MHS	2001-06	REC63V-45551-00	REC6E7-45560-01	REC6E7-45570-00	REC682-45631-00	REC648-45633-00	REC683-45611-00	REC683-45361-02-4D		REC63V-45510-01 REC63V-45510-11
9.9F WC 9.9F WH	2000	REC63V-45551-00	REC6E7-45560-01	REC6E7-45570-00	REC682-45631-00	REC648-45633-00	REC683-45611-00	REC683-45361-02-4D		REC63V-45510-01 REC63V-45510-11
9.9F WHL 9.9F WHS	2001	REC63V-45551-00	REC6E7-45560-01	REC6E7-45570-00	REC682-45631-00	REC648-45633-00	REC683-45611-00	REC683-45361-02-4D		REC63V-45510-01 REC63V-45510-11
F9.9B	1985-97	REC6E7-45551-00	REC6E7-45560-01	REC6E7-45570-00	REC682-45631-00	REC648-45633-00	REC683-45611-00	REC683-45361-02-4D		
F9.9B E	1999	REC6E7-45551-00	REC6E7-45560-01	REC6E7-45570-00	REC682-45631-00	REC648-45633-00	REC683-45611-00	REC683-45361-02-4D		
F9.9B EH	1999	REC6E7-45551-00	REC6E7-45560-01	REC6E7-45570-00	REC682-45631-00		REC683-45611-00	REC683-45361-02-4D		
F9.9B MH	1999	REC6E7-45551-00	REC6E7-45560-01	REC6E7-45570-00	REC682-45631-00	REC648-45633-00	REC683-45611-00	REC683-45361-02-4D		
F9.9C	1998	REC63V-45551-00	REC6E7-45560-01	REC6E7-45570-00	REC682-45631-00	REC648-45633-00	REC683-45611-00	REC683-45361-02-4D		REC63V-45510-01 REC63V-45510-11
F9.9C E	2000	REC63V-45551-00	REC6E7-45560-01	REC6E7-45570-00	REC682-45631-00	REC648-45633-00	REC683-45611-00	REC683-45361-02-4D		REC63V-45510-01 REC63V-45510-11
F9.9C EH	2000	REC63V-45551-00	REC6E7-45560-01	REC6E7-45570-00	REC682-45631-00	REC648-45633-00	REC683-45611-00	REC683-45361-02-4D		REC63V-45510-01 REC63V-45510-11
F9.9C EL F9.9C ES	2001-06	REC63V-45551-00	REC6E7-45560-01	REC6E7-45570-00	REC682-45631-00	REC648-45633-00	REC683-45611-00	REC683-45361-02-4D		REC63V-45510-01 REC63V-45510-11
F9.9C MH	2000	REC63V-45551-00	REC6E7-45560-01	REC6E7-45570-00	REC682-45631-00	REC648-45633-00	REC683-45611-00	REC683-45361-02-4D		REC63V-45510-01 REC63V-45510-11
F9.9C MHL F9.9C MHS	2001-06	REC63V-45551-00	REC6E7-45560-01	REC6E7-45570-00	REC682-45631-00	REC648-45633-00	REC683-45611-00	REC683-45361-02-4D		REC63V-45510-01 REC63V-45510-11
FT9.9A	1999				REC682-45631-00	REC648-45633-00				
FT9.9D	1999				REC682-45631-00	REC648-45633-00	REC683-45611-00			
FT9.9D E FT9.9D EH	2000				REC682-45631-00	REC648-45633-00	REC683-45611-00			
FT9.9D EHL FT9.9D EHX	2001				REC682-45631-00	REC648-45633-00	REC683-45611-00			







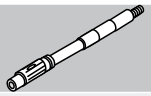



FT9.9D EL	2001-06				REC682-45631-00	REC648-45633-00	REC683-45611-00			
FT9.9D EP	2000				REC682-45631-00	REC648-45633-00				
FT9.9D EPL FT9.9D EPX	2001-02				REC682-45631-00	REC648-45633-00	REC683-45611-00			
FT9.9D ES	2001				REC682-45631-00	REC648-45633-00	REC683-45611-00			
FT9.9D EX	2001-06				REC682-45631-00	REC648-45633-00	REC683-45611-00			
FT9.9D MH	2000				REC682-45631-00	REC648-45633-00	REC683-45611-00			
FT9.9D MHL FT9.9D MHX	2001-06				REC682-45631-00	REC648-45633-00	REC683-45611-00			
13.5A	1999	REC63V-45551-00	REC6E7-45560-01	REC6E7-45570-00	REC682-45631-00	REC648-45633-00	REC683-45611-00	REC683-45361-02-4D	REC63V-45510-01 REC63V-45510-11	
13.5A MH	2000	REC63V-45551-00	REC6E7-45560-01	REC6E7-45570-00	REC682-45631-00	REC648-45633-00	REC683-45611-00	REC683-45361-02-4D	REC63V-45510-01 REC63V-45510-11	
13.5A MHL 13.5A MHS	2001-04	REC63V-45551-00	REC6E7-45560-01	REC6E7-45570-00	REC682-45631-00	REC648-45633-00	REC683-45611-00	REC683-45361-02-4D	REC63V-45510-01 REC63V-45510-11	
13.5A WH	2000	REC63V-45551-00	REC6E7-45560-01	REC6E7-45570-00	REC682-45631-00	REC648-45633-00	REC683-45611-00	REC683-45361-02-4D	REC63V-45510-01 REC63V-45510-11	
F13.5A EHL	2005-06	REC63V-45551-00	REC6E7-45560-01	REC6E7-45570-00	REC682-45631-00	REC648-45633-00	REC683-45611-00	REC683-45361-02-4D	REC63V-45510-01 REC63V-45510-11	
F13.5A EPL F13.5A EHS	2005	REC63V-45551-00	REC6E7-45560-01	REC6E7-45570-00	REC682-45631-00	REC648-45633-00	REC683-45611-00	REC683-45361-02-4D	REC63V-45510-01 REC63V-45510-11	
F13.5A MH	2001	REC63V-45551-00	REC6E7-45560-01	REC6E7-45570-00	REC682-45631-00		REC683-45611-00	REC683-45361-02-4D	REC63V-45510-01 REC63V-45510-11	
F13.5A MHL F13.5A MHS	2002-06	REC63V-45551-00	REC6E7-45560-01	REC6E7-45570-00	REC682-45631-00	REC648-45633-00	REC683-45611-00	REC683-45361-02-4D	REC63V-45510-01 REC63V-45510-11	
15D	1985-89	REC6E7-45551-00	REC6E7-45560-01	REC6E7-45570-00	REC682-45631-00	REC648-45633-00	REC683-45611-00			
15D	1990-95	REC6E7-45551-00	REC6E7-45560-01	REC6E7-45570-00	REC682-45631-00	REC648-45633-00	REC683-45611-00	REC683-45361-02-4D	REC6E7-45501-11	
15F	1995-99	REC63V-45551-00	REC6E7-45560-01	REC6E7-45570-00	REC682-45631-00	REC648-45633-00	REC683-45611-00	REC683-45361-02-4D	REC63V-45510-01 REC63V-45501-10	
15F MH	2000	REC63V-45551-00	REC6E7-45560-01	REC6E7-45570-00	REC682-45631-00	REC648-45633-00	REC683-45611-00	REC683-45361-02-4D	REC63V-45510-01 REC63V-45510-11	
15F MHL 15F MHS	2001-06	REC63V-45551-00	REC6E7-45560-01	REC6E7-45570-00	REC682-45631-00	REC648-45633-00	REC683-45611-00	REC683-45361-02-4D	REC63V-45510-01 REC63V-45510-11	
15F WC	2000	REC63V-45551-00	REC6E7-45560-01	REC6E7-45570-00	REC682-45631-00	REC648-45633-00	REC683-45611-00	REC683-45361-02-4D	REC63V-45510-01 REC63V-45510-11	
15F WCL	2001-03	REC63V-45551-00	REC6E7-45560-01	REC6E7-45570-00	REC682-45631-00	REC648-45633-00	REC683-45611-00	REC683-45361-02-4D	REC63V-45510-01 REC63V-45510-11	
15F WCS	2001-02	REC63V-45551-00	REC6E7-45560-01	REC6E7-45570-00	REC682-45631-00	REC648-45633-00	REC683-45611-00	REC683-45361-02-4D	REC63V-45510-01 REC63V-45510-11	
F15A	1998	REC63V-45551-00	REC6E7-45560-01	REC6E7-45570-00	REC682-45631-00	REC648-45633-00	REC683-45611-00	REC683-45361-02-4D	REC63V-45510-01 REC63V-45510-11	
F15A E F15A EH	1998-00	REC63V-45551-00	REC6E7-45560-01	REC6E7-45570-00	REC682-45631-00	REC648-45633-00	REC683-45611-00	REC683-45361-02-4D	REC63V-45510-01 REC63V-45510-11	
F15A EHS F15A EHL	2001-06	REC63V-45551-00	REC6E7-45560-01	REC6E7-45570-00	REC682-45631-00	REC648-45633-00	REC683-45611-00	REC683-45361-02-4D	REC63V-45510-01 REC63V-45510-11	
F15A EL	2001-06	REC63V-45551-00	REC6E7-45560-01	REC6E7-45570-00	REC682-45631-00	REC648-45633-00	REC683-45611-00	REC683-45361-02-4D	REC63V-45510-01 REC63V-45510-11	
F15A EP	2000	REC63V-45551-00	REC6E7-45560-01	REC6E7-45570-00	REC682-45631-00	REC648-45633-00		REC683-45361-02-4D		
F15A EPL F15A EPS	2001-06	REC63V-45551-00	REC6E7-45560-01	REC6E7-45570-00	REC682-45631-00	REC648-45633-00	REC683-45611-00	REC683-45361-02-4D		
F15A ES	2001-06	REC63V-45551-00	REC6E7-45560-01	REC6E7-45570-00	REC682-45631-00	REC648-45633-00	REC683-45611-00	REC683-45361-02-4D	REC63V-45510-01 REC63V-45510-11	
F15A MH	1998-00	REC63V-45551-00	REC6E7-45560-01	REC6E7-45570-00	REC682-45631-00	REC648-45633-00	REC683-45611-00	REC683-45361-02-4D	REC63V-45510-01 REC63V-45510-11	
F15A MHL F15A MHS	2001-06	REC63V-45551-00	REC6E7-45560-01	REC6E7-45570-00	REC682-45631-00	REC648-45633-00	REC683-45611-00	REC683-45361-02-4D	REC63V-45510-01 REC63V-45510-11	
20C	1985	REC689-45551-00	REC689-45560-00	REC689-45571-00-00	REC664-45631-00	REC648-45633-00	REC689-45611-00		REC689-45501-10	
20C	1986-93	REC63V-45551-00	REC689-45560-00	REC689-45571-00-00	REC664-45631-00	REC648-45633-00	REC689-45611-00		REC689-45501-10	
20C M	1990-97	REC63V-45551-00	REC689-45560-00	REC689-45571-00-00	REC664-45631-00	REC648-45633-00	REC689-45611-00		REC689-45501-10	
20C MH	1998	REC63V-45551-00	REC689-45560-00	REC689-45571-00-00	REC664-45631-00	REC648-45633-00	REC689-45611-00		REC689-45501-10	
20C MHL	2001-02	REC63V-45551-00	REC689-45560-00	REC689-45571-00-00	REC664-45631-00	REC648-45633-00	REC689-45611-00		REC689-45501-10	
20C MHS	2001-02	REC63V-45551-00	REC689-45560-00	REC689-45571-00-00	REC664-45631-00	REC648-45633-00	REC689-45611-00			
20D	1988-98					REC648-45633-00	REC6L2-45611-00			
20D MHOL 20D MHOS	2001-06					REC648-45633-00	REC6L2-45611-00			
20D WOL 20D WOS	2001+					REC648-45633-00	REC6L2-45611-00			
F20A	1998-99	REC61N-45551-00	REC61N-45560-10	REC61N-45570-00	REC664-45631-00	REC648-45633-00	REC6L2-45611-00	PAF25-04070000	REC61N-45510-10	
F20A E F20A EH	2000	REC61N-45551-00	REC61N-45560-10	REC61N-45570-00	REC664-45631-00	REC648-45633-00	REC6L2-45611-00	PAF25-04070000	REC61N-45510-00	
F20A EH	2000	REC61N-45551-00	REC61N-45560-10	REC61N-45570-00	REC664-45631-00	REC648-45633-00	REC6L2-45611-00	PAF25-04070000	REC61N-45510-00	
F20A EL	2001	REC61N-45551-00	REC61N-45560-10	REC61N-45570-00	REC664-45631-00	REC648-45633-00	REC6L2-45611-00	PAF25-04070000	REC61N-45510-10	
F20A ES	2006	REC61N-45551-00	REC61N-45560-10	REC61N-45570-00	REC664-45631-00	REC648-45633-00	REC6L2-45611-00	PAF25-04070000	REC61N-45510-10	
F20A ET	2000	REC61N-45551-00	REC61N-45560-10	REC61N-45570-00	REC664-45631-00	REC648-45633-00	REC6L2-45611-00	PAF25-04070000	REC61N-45510-00	
F20A ETL	2006	REC61N-45551-00	REC61N-45560-10	REC61N-45570-00	REC664-45631-00	REC648-45633-00	REC6L2-45611-00	PAF25-04070000	REC61N-45510-10	
F20A MH	2000	REC61N-45551-00	REC61N-45560-10	REC61N-45570-00	REC664-45631-00	REC648-45633-00	REC6L2-45611-00	PAF25-04070000	REC61N-45510-00	
F20A MHL	2000	REC61N-45551-00	REC61N-45560-10	REC61N-45570-00	REC664-45631-00	REC648-45633-00	REC6L2-45611-00	PAF25-04070000	REC61N-45510-10	
F20A MHS	2001	REC61N-45551-00	REC61N-45560-10	REC61N-45570-00	REC664-45631-00	REC648-45633-00	REC6L2-45611-00	PAF25-04070000	REC61N-45510-10	
25B	1994-95	REC6K5-45551-00	REC6K5-45560-00		REC664-45631-00	REC648-45633-00	REC697-45611-00	REC688-45331-00-94		
25B MHL	2001-06	REC61N-45551-00	REC61N-45560-10	REC61N-45570-00	REC664-45631-00	REC648-45633-00	REC6L2-45611-00	PAF25-04070000	REC61N-45510-10	
25B MHS	2001-06	REC61N-45551-00	REC61N-45560-10	REC61N-45570-00	REC664-45631-00	REC648-45633-00	REC6L2-45611-00	PAF25-04070000	REC61N-45510-00	
25B WCS	2001-02	REC61N-45551-00	REC61N-45560-10	REC61N-45570-00	REC664-45631-00	REC648-45633-00	REC6L2-45611-00	PAF25-04070000	REC61N-45510-10	
25D	1985-87	REC689-45551-00	REC689-45560-00	REC689-45571-00-00	REC664-45631-00	REC648-45633-00	REC689-45611-00	PAF25-04070000		
25D M	1990-97	REC689-45551-00	REC689-45560-00	REC689-45571-00-00	REC664-45631-00	REC648-45633-00	REC689-45611-00	PAF25-04070000		




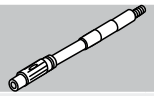



25D MH	1998	REC689-45551-00	REC689-45560-00	REC689-45571-00-00	REC664-45631-00	REC648-45633-00		PAF25-04070000	REC689-45501-10
25D MHL 25D MHS	2001	REC689-45551-00	REC689-45560-00	REC689-45571-00-00	REC664-45631-00	REC648-45633-00		PAF25-04070000	
25J	1987-91					REC648-45633-00		PAF25-04070000	
25J	1992-00					REC648-45633-00		PAF25-04070000	
25N	1988					REC648-45633-00	REC6L2-45611-00	PAF25-04070000	
25N MHOL 25N MHOS	2001-06					REC648-45633-00	REC6L2-45611-00	PAF25-04070000	
25N WOL 25N WOS	2001-03					REC648-45633-00	REC6L2-45611-00	PAF25-04070000	
25Q	1988-94	REC6H4-45551-00	REC6H4-45560-00	REC6H4-45570-00	REC663-45631-00	REC648-45633-00	REC679-45611-00	PAF25-04070000	
25V	1996	REC61N-45551-00	REC61N-45560-10	REC61N-45570-00	REC664-45631-00	REC648-45633-00	REC6L2-45611-00	PAF25-04070000	REC61N-45510-10
25V	1996-98	REC61N-45551-00	REC61N-45560-10	REC61N-45570-00	REC664-45631-00	REC648-45633-00	REC6L2-45611-00	PAF25-04070000	REC61N-45510-10
25V MHL 25V MHS	2001	REC61N-45551-00	REC61N-45560-10	REC61N-45570-00	REC664-45631-00	REC648-45633-00	REC6L2-45611-00	PAF25-04070000	REC61N-45510-10
25V WCS	2001	REC61N-45551-00	REC61N-45560-10	REC61N-45570-00	REC664-45631-00	REC648-45633-00	REC6L2-45611-00	PAF25-04070000	REC61N-45510-10
F25A E F25A EH	2000	REC61N-45551-00	REC61N-45560-10	REC61N-45570-00	REC664-45631-00	REC648-45633-00	REC6L2-45611-00	PAF25-04070000	REC61N-45510-10
F25A EHL	2001-02	REC61N-45551-00	REC61N-45560-10	REC61N-45570-00	REC664-45631-00	REC648-45633-00	REC6L2-45611-00	PAF25-04070000	REC61N-45510-10
F25A EHS	2001	REC61N-45551-00	REC61N-45560-10	REC61N-45570-00	REC664-45631-00	REC648-45633-00	REC6L2-45611-00	PAF25-04070000	REC61N-45510-10
F25A EL F25A ES	2001-06	REC61N-45551-00	REC61N-45560-10	REC61N-45570-00	REC664-45631-00	REC648-45633-00	REC6L2-45611-00	PAF25-04070000	REC61N-45510-10
F25A ET	2000	REC61N-45551-00	REC61N-45560-10	REC61N-45570-00	REC664-45631-00	REC648-45633-00	REC6L2-45611-00	PAF25-04070000	REC61N-45510-10
F25A ETL	2001-06	REC61N-45551-00	REC61N-45560-10	REC61N-45570-00	REC664-45631-00	REC648-45633-00	REC6L2-45611-00	PAF25-04070000	REC61N-45510-10
F25A MH	2000	REC61N-45551-00	REC61N-45560-10	REC61N-45570-00	REC664-45631-00	REC648-45633-00	REC6L2-45611-00	PAF25-04070000	REC61N-45510-10
F25A MHL F25A MHS	2001-06	REC61N-45551-00	REC61N-45560-10	REC61N-45570-00	REC664-45631-00	REC648-45633-00	REC6L2-45611-00	PAF25-04070000	REC61N-45510-10
FT25B ED	2000						REC66T-45611-00	REC63D-45361-02-4D	
FT25B EDL FT25B EDX	2001-02						REC66T-45611-00	REC63D-45361-02-4D	
FT25B ET	2000						REC66T-45611-00	REC63D-45361-02-4D	
FT25B ETL	2001-06						REC66T-45611-00	REC63D-45361-02-4D	
FT25B ETX	2001-02						REC66T-45611-00	REC63D-45361-02-4D	
30A	1985	REC689-45551-00	REC689-45560-00	REC689-45571-00-00	REC664-45631-00	REC648-45633-00	REC689-45611-00		
30A M	1990-92	REC689-45551-00	REC689-45560-00	REC689-45571-00-00	REC664-45631-00	REC648-45633-00	REC689-45611-00		REC689-45501-10
30D	1986-00					REC648-45633-00			
30D EOL 30D EOS 30D ETOL 30D MHOL 30D MHOS	2001-06					REC648-45633-00			
30D OL	2001-03					REC648-45633-00			
30D EOS	2001-06					REC648-45633-00			
30G	1996	REC61N-45551-00	REC61N-45560-10	REC61N-45570-00	REC664-45631-00	REC648-45633-00	REC6L2-45611-00	PAF25-04070000	REC61N-45510-00
30G	1996-98	REC61N-45551-00	REC61N-45560-10	REC61N-45570-00	REC664-45631-00	REC648-45633-00	REC6L2-45611-00	PAF25-04070000	REC61N-45510-00
30G MHS 30G WCS	2001	REC61N-45551-00	REC61N-45560-10	REC61N-45570-00		REC648-45633-00	REC6L2-45611-00	PAF25-04070000	REC61N-45510-00
30H MHS	2001-02	REC61N-45551-00	REC61N-45560-10	REC61N-45570-00	REC664-45631-00	REC648-45633-00	REC6L2-45611-00	PAF25-04070000	REC61N-45510-00
30H WCS	2001-02	REC61N-45551-00	REC61N-45560-10	REC61N-45570-00	REC664-45631-00	REC648-45633-00	REC6L2-45611-00	PAF25-04070000	REC61N-45510-10
F30A ETL	2001-06	REC66T-45551-00	REC66T-45560-00	REC66T-45571-00	REC66T-45631-00		REC66T-45611-00	REC63D-45361-02-4D	REC67C-45501-10
F30A ETS	2001-06	REC66T-45551-00	REC66T-45560-00	REC66T-45571-00	REC66T-45631-00		REC66T-45611-00	REC63D-45361-02-4D	REC67C-45501-00
F30A MHDL	2001-06	REC66T-45551-00	REC66T-45560-00	REC66T-45571-00	REC66T-45631-00		REC66T-45611-00	REC63D-45361-02-4D	REC67C-45501-10
F30A MHDS	2001-06	REC66T-45551-00	REC66T-45560-00	REC66T-45571-00	REC66T-45631-00		REC66T-45611-00	REC63D-45361-02-4D	REC67C-45501-00
E40G WH	2003	REC6F5-45551-00	REC6F5-45560-00	REC6F5-45570-00	REC663-45631-00	REC663-45633-00	REC6F6-45611-00	REC63D-45361-02-4D	REC676-45501-10
40H	1985-90	REC6H4-45551-00	REC6H4-45560-00	REC6H4-45570-00	REC6H4-45631-00	REC663-45633-00	REC679-45611-00		
40H	1991-93	REC6H4-45551-00	REC6H4-45560-00	REC6H4-45570-00	REC6H4-45631-00	REC663-45633-00	REC679-45611-00		
40Q	1993-98	REC6H9-45551-00	REC679-45560-00	REC677-41112-A0	REC663-45631-00	REC663-45633-00	REC679-45611-00		REC679-45501-10
40Q E	1992	REC6H9-45551-00	REC679-45560-00	REC677-41112-A0	REC663-45631-00	REC663-45633-00	REC679-45611-00		REC679-45501-10
40Q M	1990-92	REC6H9-45551-00	REC679-45560-00	REC677-41112-A0	REC663-45631-00	REC663-45633-00	REC679-45611-00		REC679-45501-10
40R MHO	2000	REC6H4-45551-00	REC6H4-45560-00	REC6H4-45570-00		REC663-45633-00		REC63D-45361-02-4D	
40R ROS	2001	REC6H4-45551-00	REC6H4-45560-00	REC6H4-45570-00		REC663-45633-00		REC63D-45361-02-4D	
40V	1995-98	REC6H4-45551-00	REC6H4-45560-00	REC6H4-45570-00		REC663-45633-00		REC63D-45361-02-4D	
40V EO	2000	REC6H4-45551-00	REC6H4-45560-00	REC6H4-45570-00		REC663-45633-00		REC63D-45361-02-4D	
40V EOL 40V EOS	2001-06	REC6H4-45551-00	REC6H4-45560-00	REC6H4-45570-00		REC663-45633-00		REC63D-45361-02-4D	
40V ETO	2000	REC6H4-45551-00	REC6H4-45560-00	REC6H4-45570-00		REC663-45633-00		REC63D-45361-02-4D	
40V ETOL 40V ETOS	2001-03	REC6H4-45551-00	REC6H4-45560-00	REC6H4-45570-00		REC663-45633-00		REC63D-45361-02-4D	
40V MHOL 40V MHOS	2001-06	REC6H4-45551-00	REC6H4-45560-00	REC6H4-45570-00		REC663-45633-00		REC63D-45361-02-4D	
40V MO	2000	REC6H4-45551-00	REC6H4-45560-00	REC6H4-45570-00		REC663-45633-00		REC63D-45361-02-4D	
40X	1998	REC66T-45551-00	REC66T-45560-00	REC66T-45571-00	REC66T-45631-00	REC663-45633-00	REC66T-45611-00	REC63D-45361-02-4D	REC66T-45501-10
40X MH	2000	REC66T-45551-00	REC66T-45560-00	REC66T-45571-00	REC66T-45631-00	REC663-45633-00	REC66T-45611-00	REC63D-45361-02-4D	REC66T-45501-10
40X MHL	2001-06	REC66T-45551-00	REC66T-45560-00	REC66T-45571-00	REC66T-45631-00	REC663-45633-00	REC66T-45611-00	REC63D-45361-02-4D	REC66T-45501-10
40X MHS	2001-02	REC66T-45551-00	REC66T-45560-00	REC66T-45571-00	REC66T-45631-00	REC663-45633-00	REC66T-45611-00	REC63D-45361-02-4D	REC66T-45501-01
40X W	2000	REC66T-45551-00	REC66T-45560-00	REC66T-45571-00	REC66T-45631-00	REC663-45633-00	REC66T-45611-00	REC63D-45361-02-4D	REC66T-45501-10
40X WL 40X WS	2001	REC66T-45551-00	REC66T-45560-00	REC66T-45571-00	REC66T-45631-00	REC663-45633-00	REC66T-45611-00	REC63D-45361-02-4D	REC66T-45501-10







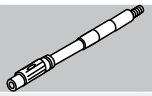



40X WT	2000	REC66T-45551-00	REC66T-45560-00	REC66T-45571-00	REC66T-45631-00	REC663-45633-00	REC66T-45611-00	REC63D-45361-02-4D	REC66T-45501-10
40X WTL	2001-03	REC66T-45551-00	REC66T-45560-00	REC66T-45571-00	REC66T-45631-00	REC663-45633-00	REC66T-45611-00	REC63D-45361-02-4D	REC66T-45501-10
40Y ETOL 40Y MHOS	2001-06	REC6H4-45551-00	REC6H4-45560-00	REC6H4-45570-00		REC663-45633-00		REC63D-45361-02-4D	
E40G MH	2003	REC6F5-45551-00	REC6F5-45560-00	REC6F5-45570-00	REC663-45631-00	REC663-45633-00	REC6F6-45611-00	REC676-45361-00	REC676-45501-10
E40G MHL	2003	REC6F5-45551-00	REC6F5-45560-00	REC6F5-45570-00	REC663-45631-00	REC663-45633-00	REC6F6-45611-00	REC676-45361-00	
E40G MHS	2003	REC6F5-45551-00	REC6F5-45560-00	REC6F5-45570-00	REC663-45631-00	REC663-45633-00	REC6F6-45611-00	REC676-45361-00	REC676-45501-10
F40A	1999	REC6H4-45551-00	REC6H4-45560-00	REC6H4-45570-00		REC663-45633-00		REC63D-45361-02-4D	REC67C-45501-00
F40A ED	1999	REC6K5-45551-00	REC6K5-45560-00	REC6K5-45570-00		REC688-45633-00		REC63D-45361-02-4D	REC67C-45501-00
F40A EDL	2001	REC6H4-45551-00	REC6H4-45560-00	REC6H4-45570-00		REC688-45633-00		REC63D-45361-02-4D	REC67C-45501-10
F40A ET	1999	REC6K5-45551-00	REC6K5-45560-00	REC6K5-45570-00	REC688-45631-00	REC688-45633-00	REC688-45611-00	REC688-45331-00-94	
F40A ETL	2001-02	REC6H4-45551-00	REC6H4-45560-00	REC6H4-45570-00		REC688-45633-00		REC63D-45361-02-4D	
F40A ED	1999	REC6H4-45551-00	REC6H4-45560-00	REC6H4-45570-00	REC688-45631-00	REC663-45633-00	REC688-45611-00	REC688-45331-00-94	
F40B ED	2000-01	REC66T-45551-00	REC66T-45560-00	REC66T-45571-00	REC66T-45631-00		REC66T-45611-00	REC63D-45361-02-4D	REC67C-45501-00
F40B EDL	2001-06	REC66T-45551-00	REC66T-45560-00	REC66T-45571-00	REC66T-45631-00		REC66T-45611-00	REC63D-45361-02-4D	REC67C-45501-10
F40B EDS	2001-02	REC66T-45551-00	REC66T-45560-00	REC66T-45571-00	REC66T-45631-00		REC66T-45611-00	REC63D-45361-02-4D	REC67C-45501-00
F40B ET	2000-01	REC66T-45551-00	REC66T-45560-00	REC66T-45571-00	REC66T-45631-00		REC66T-45611-00	REC63D-45361-02-4D	REC67C-45501-10
E40B ETL	2001-06	REC66T-45551-00	REC66T-45560-00	REC66T-45571-00	REC66T-45631-00		REC66T-45611-00	REC63D-45361-02-4D	REC67C-45501-10
F40B ETS	2001-06	REC66T-45551-00	REC66T-45560-00	REC66T-45571-00	REC66T-45631-00		REC66T-45611-00	REC63D-45361-02-4D	REC67C-45501-00
F40B MHD	2000	REC66T-45551-00	REC66T-45560-00	REC66T-45571-00	REC66T-45631-00		REC66T-45611-00	REC63D-45361-02-4D	REC67C-45501-00
F40B MHDL	2001-06	REC66T-45551-00	REC66T-45560-00	REC66T-45571-00	REC66T-45631-00		REC66T-45611-00	REC63D-45361-02-4D	REC67C-45501-10
F40B MHDS	2001-06	REC66T-45551-00	REC66T-45560-00	REC66T-45571-00	REC66T-45631-00		REC66T-45611-00	REC63D-45361-02-4D	REC67C-45501-00
F45A	1996-99	REC6K5-45551-00	REC6K5-45560-00	REC6K5-45570-00	REC688-45631-00	REC688-45633-00	REC688-45611-00	REC688-45331-00-94	
F45A ED F45A ET	2000	REC6K5-45551-00	REC6K5-45560-00	REC6K5-45570-00	REC688-45631-00	REC688-45633-00	REC688-45611-00	REC688-45331-00-94	
50D	1984-90	REC6H4-45551-00	REC6H4-45560-00	REC6H4-45570-00	REC6H4-45631-00	REC663-45633-00	REC679-45611-00		
50D	1991-93	REC6H4-45551-00	REC6H4-45560-00	REC663-45631-00	REC6H4-45631-00	REC663-45633-00	REC679-45611-00		
50G	1993-98	REC6K5-45551-00	REC6K5-45560-00		REC663-45631-00	REC688-45633-00	REC697-45611-00	REC688-45331-00-94	
50G ETO	2000	REC6K5-45551-00	REC6K5-45560-00		REC663-45631-00	REC688-45633-00	REC697-45611-00	REC688-45331-00-94	
50G ETOL	2001-06	REC6K5-45551-00	REC6K5-45560-00		REC663-45631-00	REC688-45633-00	REC697-45611-00	REC688-45331-00-94	
50H	1995-98	REC6H4-45551-00	REC6H4-45560-00	REC6H4-45570-00		REC663-45633-00		REC63D-45361-02-4D	
50H EDO	2000	REC6H4-45551-00	REC6H4-45560-00	REC6H4-45570-00		REC663-45633-00		REC63D-45361-02-4D	
50H EDOL 50H EDOS	2001-02	REC6H4-45551-00	REC6H4-45560-00	REC6H4-45570-00		REC663-45633-00		REC63D-45361-02-4D	
50H MDO 50H MO	2000	REC6H4-45551-00	REC6H4-45560-00	REC6H4-45570-00		REC663-45633-00		REC63D-45361-02-4D	
F50A	1995	REC6H4-45551-00	REC6H4-45560-00	REC6H4-45570-00		REC663-45633-00		REC63D-45361-02-4D	
F50A ED	2000	REC6K5-45551-00	REC6K5-45560-00	REC6K5-45570-00		REC663-45633-00	REC688-45611-00		
F50A EDL	2001-06	REC6H4-45551-00	REC6H4-45560-00			REC688-45633-00		REC63D-45361-02-4D	
F50A ET	2000	REC6K5-45551-00	REC6K5-45560-00	REC6K5-45570-00		REC663-45633-00	REC688-45611-00		
F50A ETL	2001-06	REC6H4-45551-00	REC6H4-45560-00			REC688-45633-00		REC63D-45361-02-4D	
F50B	1996-97	REC6K5-45551-00	REC6K5-45560-00	REC6K5-45570-00	REC688-45631-00	REC688-45633-00			
F50B	1998-99	REC6K5-45551-00	REC6K5-45560-00	REC6K5-45570-00				REC688-45331-00-94	
F50B ET	2000	REC6K5-45551-00	REC6K5-45560-00	REC6K5-45570-00	REC688-45631-00	REC663-45633-00	REC688-45611-00	REC688-45331-00-94	
FT50B	1998-99	REC6K5-45551-00	REC6K5-45560-00	REC6K5-45570-00	REC688-45631-00	REC688-45633-00	REC688-45611-00	REC688-45331-00-94	
FT50B ETL	2001-02					REC688-45633-00		REC63D-45361-02-4D	
FT50C ETL	2002-06		REC67F-45560-00			REC688-45633-00			
FT50G ETL	2005-06	REC6K5-45551-00	REC6K5-45560-00			REC688-45633-00			
55B	1993-98	REC697-45551-00	REC697-45560-00	REC697-45571-00-00	REC663-45631-00	REC663-45633-00	REC697-45611-00	REC663-45331-00-94	REC663-45510-01
55B E	1990-91	REC697-45551-00	REC697-45560-00	REC697-45571-00-00	REC663-45631-00	REC663-45633-00	REC697-45611-00	REC663-45331-00-94	REC663-45510-01
55B E	1992	REC697-45551-00	REC697-45560-00	REC697-45571-00-00	REC663-45631-00	REC663-45633-00	REC697-45611-00	REC663-45331-00-94	REC663-45510-01
55B EHD 55B ET	2000	REC697-45551-00	REC697-45560-00	REC697-45571-00-00	REC663-45631-00	REC663-45633-00	REC697-45611-00		REC663-45510-01
55B ETL	2001-02	REC697-45551-00	REC697-45560-00	REC697-45571-00-00	REC663-45631-00	REC663-45633-00	REC697-45611-00	REC663-45331-00-94	
60F	1984-98	REC6K5-45551-00	REC6K5-45560-00		REC663-45631-00	REC688-45633-00	REC697-45611-00	REC688-45331-00-94	
60F EO 60F ETO	2000	REC6K5-45551-00	REC6K5-45560-00		REC663-45631-00	REC688-45633-00	REC697-45611-00	REC688-45331-00-94	
60F ETOL	2001-06	REC6K5-45551-00	REC6K5-45560-00		REC663-45631-00	REC688-45633-00	REC697-45611-00	REC688-45331-00-94	
E60H MHDL	2001-06	REC6K5-45551-00	REC6K5-45560-00		REC6H1-45631-01	REC688-45633-00	REC6H1-45611-00	REC688-45331-00-94	REC69D-45501-10
FT60B ETL	2003-06	REC6K5-45551-00	REC6K5-45560-00			REC688-45633-00			
FT60D ETL	2005-06	REC6K5-45551-00	REC6K5-45560-00			REC688-45633-00			
70B	1984-98	REC6K5-45551-00	REC6K5-45560-00		REC663-45631-00	REC688-45633-00	REC697-45611-00	REC688-45331-00-94	
70B EDOL	2001	REC6K5-45551-00	REC6K5-45560-00			REC688-45633-00	REC697-45611-00	REC688-45331-00-94	
70B EO 70B ETO	2000	REC6K5-45551-00	REC6K5-45560-00		REC663-45631-00	REC688-45633-00	REC697-45611-00	REC688-45331-00-94	
70B ETOL	2001-06	REC6K5-45551-00	REC6K5-45560-00		REC663-45631-00	REC688-45633-00	REC697-45611-00	REC688-45331-00-94	
75A	1990-98	REC688-45551-00	REC688-45560-00	REC688-45571-00-00	REC688-45631-00	REC688-45633-00	REC688-45611-00	REC688-45331-00-94	REC688-45501-11
75A E	1990-00	REC688-45551-00	REC688-45560-00	REC688-45571-00-00	REC688-45631-00	REC688-45633-00	REC688-45611-00	REC688-45331-00-94	REC688-45501-10
75A EDL	2001-06	REC688-45551-00	REC688-45560-00	REC688-45571-00-00	REC688-45631-00	REC688-45633-00	REC688-45611-00	REC688-45331-00-94	REC688-45501-10
75A EM	1992-93	REC688-45551-00	REC688-45560-00	REC688-45571-00-00	REC688-45631-00	REC688-45633-00	REC688-45611-00	REC688-45331-00-94	REC688-45501-11
75A ET	2000	REC688-45551-00	REC688-45560-00	REC688-45571-00-00	REC688-45631-00	REC688-45633-00	REC688-45611-00	REC688-45331-00-94	REC688-45501-11
75A ETL	2001-02	REC688-45551-00	REC688-45560-00	REC688-45571-00-00	REC688-45631-00	REC688-45633-00	REC688-45611-00	REC688-45331-00-94	REC688-45501-11





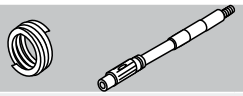



75A MHD	2000	REC688-45551-00	REC688-45560-00	REC688-45571-00-00	REC688-45631-00	REC688-45633-00	REC688-45611-00	REC688-45331-00-94	REC688-45501-11
75C ETO	2000	REC688-45551-00	REC688-45560-00	REC688-45571-00-00		REC688-45633-00	REC6H1-45611-00	REC688-45331-00-94	
75C ETOL	2001-06	REC688-45551-00	REC688-45560-00	REC688-45571-00-00		REC688-45633-00	REC6H1-45611-00	REC688-45331-00-94	
80A	1985-95	REC688-45551-00	REC688-45560-00	REC688-45571-00-00	REC6H1-45631-01	REC688-45633-00	REC6H1-45611-00	REC688-45331-00-94	
F80A	1999		REC67F-45560-00	REC67F-45570-00		REC688-45633-00			REC67F-45501-10
F80A ET	2000		REC67F-45560-00	REC67F-45570-00		REC688-45633-00			REC67F-45501-10
F80A ETL	2001-06		REC67F-45560-00	REC67F-45570-00		REC688-45633-00	REC67F-45611-01		REC67F-45501-10
F80A ETX	2001		REC67F-45560-00	REC67F-45570-00		REC688-45633-00	REC67F-45611-01		REC67F-45501-10
F80B ETL	2005-06		REC67F-45560-00	REC67F-45570-00		REC688-45633-00	REC67F-45611-01		REC67F-45501-10
85A	1996-98	REC688-45551-00	REC688-45560-00	REC688-45571-00-00	REC688-45631-00	REC688-45633-00	REC688-45611-00	REC688-45331-00-94	REC688-45501-10
85A E	1990-00	REC688-45551-00	REC688-45560-00	REC688-45571-00-00	REC688-45631-00	REC688-45633-00	REC688-45611-00	REC688-45331-00-94	REC688-45501-10
85A ET	2000	REC688-45551-00	REC688-45560-00	REC688-45571-00-00	REC688-45631-00	REC688-45633-00	REC688-45611-00	REC688-45331-00-94	REC688-45501-10
85A ETL	2001-02	REC688-45551-00	REC688-45560-00	REC688-45571-00-00	REC688-45631-00	REC688-45633-00	REC688-45611-00	REC688-45331-00-94	REC688-45501-11
90A	1984-98	REC688-45551-00	REC688-45560-00	REC688-45571-00-00	REC6H1-45631-01	REC688-45633-00	REC6H1-45611-00	REC688-45331-00-94	
90A ETO	2000	REC688-45551-00	REC688-45560-00	REC688-45571-00-00	REC6H1-45631-01	REC688-45633-00	REC6H1-45611-00	REC688-45331-00-94	
90A ETOL	2001-06	REC688-45551-00	REC688-45560-00	REC688-45571-00-00	REC6H1-45631-01	REC688-45633-00	REC6H1-45611-00	REC688-45331-00-94	
100A	1998	REC6E5-45551-00	REC6E5-45560-00	REC6E5-45570-00	REC6E5-45631-00	REC6E5-45633-01	REC6E5-45611-00	REC6E5-45331-00-94	REC6E5-45501-01
100A ETO	2000	REC6E5-45551-00	REC6E5-45560-00	REC6E5-45570-00	REC6E5-45631-00	REC6E5-45633-01	REC6E5-45611-00	REC6E5-45331-00-94	REC6E5-45501-01
100A ETOL	2001	REC6E5-45551-00	REC6E5-45560-00	REC6E5-45570-00	REC6E5-45631-00	REC6E5-45633-01	REC6E5-45611-00	REC6E5-45331-00-94	
F100A	1999		REC67F-45560-00	REC67F-45570-00		REC688-45633-00	REC67F-45611-01		REC67F-45501-10
F100A ET	2000		REC67F-45560-00	REC67F-45570-00		REC688-45633-00	REC67F-45611-01		REC67F-45501-10
F100A ETL	2001-06		REC67F-45560-00	REC67F-45570-00		REC688-45633-00	REC67F-45611-01		
F100A ETX	2001		REC67F-45560-00	REC67F-45570-00		REC688-45633-00	REC67F-45611-01		
F100B ETX	2005-06					REC6E5-45633-01	REC6E5-45611-00	REC6E5-45331-00-94	
F100D ETL	2005-06					REC688-45633-00			
115A	1984-87	REC6E5-45551-00	REC6E5-45560-00	REC6E5-45570-00	REC6E5-45631-00	REC6E5-45633-01	REC6E5-45611-00	REC6E5-45331-00-94	REC6E5-45501-01
115B	1988-95	REC6E5-45551-00	REC6E5-45560-00	REC6E5-45570-00	REC6E5-45631-00	REC6E5-45633-01	REC6E5-45611-00	REC6E5-45331-00-94	REC6E5-45501-01
115B	1996	REC6E5-45551-00	REC6E5-45560-00	REC6E5-45570-00	REC6E5-45631-00	REC6E5-45633-01	REC6E5-45611-00	REC6E5-45331-00-94	REC6E5-45501-01
155B ETO	1997-98	REC6E5-45551-00	REC6E5-45560-00	REC6E5-45570-00	REC6E5-45631-00	REC6E5-45633-01	REC6E5-45611-00	REC6E5-45331-00-94	
115B ETO	1999-00	REC6E5-45551-00	REC6E5-45560-00	REC6E5-45570-00	REC6E5-45631-00	REC6E5-45633-01	REC6E5-45611-00	REC6E5-45331-00-94	REC6E5-45501-01
115B ETOL	2001-02	REC6E5-45551-00	REC6E5-45560-00	REC6E5-45570-00	REC6E5-45631-00	REC6E5-45633-01	REC6E5-45611-00	REC6E5-45331-00-94	
115C	1990-95	REC6E5-45551-00	REC6E5-45560-00	REC6E5-45570-00	REC6E5-45631-00	REC6E5-45633-01	REC6E5-45611-00	REC6E5-45331-00-94	REC6E5-45501-01
115C	1995-98	REC6E5-45551-00	REC6E5-45560-00	REC6E5-45570-00	REC6E5-45631-00	REC6E5-45633-01	REC6E5-45611-00		REC6E5-45501-01
115C ETO	2000	REC6E5-45551-00	REC6E5-45560-00	REC6E5-45570-00	REC6E5-45631-00	REC6E5-45633-01	REC6E5-45611-00	REC6E5-45331-00-94	
115C ETOL	2001-06	REC6E5-45551-00	REC6E5-45560-00	REC6E5-45570-00	REC6E5-45631-00	REC6E5-45633-01	REC6E5-45611-00	REC6E5-45331-00-94	
115C ETOX	2001-02	REC6E5-45551-00	REC6E5-45560-00	REC6E5-45570-00	REC6E5-45631-00	REC6E5-45633-01	REC6E5-45611-00	REC6E5-45331-00-94	
F115A ET	2000					REC6E5-45633-01	REC6E5-45611-00	REC6E5-45331-00-94	
F115A ETL F115A ETX	2001-06					REC6E5-45633-01	REC6E5-45611-00	REC6E5-45331-00-94	
FL115A ET	2000					REC6E5-45633-01	REC6E5-45611-00	REC6E5-45331-00-94	
FL115A ETX	2001-06					REC6E5-45633-01	REC6E5-45611-00	REC6E5-45331-00-94	
130B	1990-94	REC6E5-45551-00	REC6E5-45560-00	REC6E5-45570-00	REC6E5-45631-00	REC6E5-45633-01	REC6E5-45611-00	REC6E5-45331-00-94	
130B	1995-99	REC6E5-45551-00	REC6E5-45560-00	REC6E5-45570-00	REC6E5-45631-00	REC6E5-45633-01	REC6E5-45611-00	REC6E5-45331-00-94	
130B ETO	2000	REC6E5-45551-00	REC6E5-45560-00	REC6E5-45570-00	REC6E5-45631-00	REC6E5-45633-01	REC6E5-45611-00	REC6E5-45331-00-94	REC6E5-45501-01
130B ETOL	2001-06	REC6E5-45551-00	REC6E5-45560-00	REC6E5-45570-00	REC6E5-45631-00	REC6E5-45633-01	REC6E5-45611-00	REC6E5-45331-00-94	
130B ETOX	2001	REC6E5-45551-00	REC6E5-45560-00	REC6E5-45570-00	REC6E5-45631-00	REC6E5-45633-01	REC6E5-45611-00	REC6E5-45331-00-94	
L130B	1991-94	REC6E5-45551-00	REC6E5-45560-00	REC6E5-45570-00	REC6E5-45631-00	REC6E5-45633-01	REC6E5-45611-00	REC6E5-45331-00-94	REC6E5-45501-01
L130B	1995-98	REC6E5-45551-00	REC6E5-45560-00	REC6E5-45570-00	REC6E5-45631-00	REC6E5-45633-01	REC6E5-45611-00	REC6E5-45331-00-94	REC6E5-45501-01
L130B ETO	2000	REC6E5-45551-00	REC6E5-45560-00	REC6E5-45570-00	REC6E5-45631-00	REC6E5-45633-01	REC6E5-45611-00	REC6E5-45331-00-94	REC6E5-45501-01
L130B ETOX	2001	REC6E5-45551-00	REC6E5-45560-00	REC6E5-45570-00	REC6E5-45631-00	REC6E5-45633-01		REC6E5-45331-00-94	
140A	1984-87	REC6E5-45551-00	REC6E5-45560-00	REC6E5-45570-00	REC6E5-45631-00	REC6E5-45633-01	REC6E5-45611-00	REC6E5-45331-00-94	REC6E5-45501-01
140B	1988	REC6E5-45551-00	REC6E5-45560-00	REC6E5-45570-00	REC6E5-45631-00	REC6E5-45633-01	REC6E5-45611-00	REC6E5-45331-00-94	
L140B	1989	REC6E5-45551-00	REC6E5-45560-00	REC6E5-45570-00	REC6E5-45631-00	REC6E5-45633-01			
150A	1984-89	REC6G5-45551-00	REC6G5-45560-00	REC6G5-45571-00	REC6G5-45631-00	REC6E5-45633-01	REC6E5-45611-00		
150A ET	1998-00	REC6G5-45551-00	REC6G5-45560-00	REC6G5-45571-00	REC6G5-45631-00	REC6E5-45633-01		REC6J9-45332-00-CA	REC6G5-45501-21
150A ETO	1986-87	REC6G5-45551-00	REC6G5-45560-00	REC6G5-45571-00	REC6G5-45631-00	REC6E5-45633-01	REC6J9-45611-00	REC6J9-45332-00-CA	
150A ETL 150A ETX	2001-02	REC6G5-45551-00	REC6G5-45560-00	REC6G5-45571-00	REC6G5-45631-00	REC6E5-45633-01	REC6J9-45611-00	REC6J9-45332-00-CA	REC6G5-45501-21
150C	1990-94	REC6G5-45551-00	REC6G5-45560-00	REC6G5-45571-00	REC6G5-45631-00	REC6E5-45633-01	REC6J9-45611-00	REC6J9-45332-00-CA	REC6G5-45501-21
150C	1995	REC6G5-45551-00	REC6G5-45560-00	REC6G5-45571-00	REC6G5-45631-00	REC6E5-45633-01	REC6J9-45611-00	REC6J9-45332-00-CA	REC6G5-45501-21
150F	1996-98	REC6G5-45551-00	REC6G5-45560-00	REC6G5-45571-00	REC6G5-45631-00	REC6E5-45633-01	REC6J9-45611-00	REC6J9-45332-00-CA	REC6G5-45501-21
150F	1997-98	REC6G5-45551-00	REC6G5-45560-00	REC6G5-45571-00	REC6G5-45631-00	REC6E5-45633-01	REC6J9-45611-00	REC6J9-45332-00-CA	REC6G5-45501-21
150F ETO	2000	REC6G5-45551-00	REC6G5-45560-00	REC6G5-45571-00	REC6G5-45631-00	REC6E5-45633-01	REC6J9-45611-00	REC6J9-45332-00-CA	REC6G5-45501-21
150F ETOL 150F ETOX	2001-06	REC6G5-45551-00	REC6G5-45560-00	REC6G5-45571-00	REC6G5-45631-00	REC6E5-45633-01	REC6J9-45611-00	REC6J9-45332-00-CA	REC6G5-45501-21
F150A ETL F150A ETX FL150A ETL FL150A ETX	2004-06					REC6E5-45633-01	REC6J9-45611-00	REC6J9-45332-00-CA	
L150A L150A ETO	1988-89	REC6G5-45551-00	REC6G5-45560-00	REC6G5-45571-00	REC6G5-45631-00	REC6E5-45633-01			REC6G5-45501-21







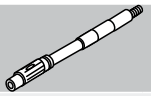



L150C	1990-94	REC6G5-45551-00	REC6G5-45560-00	REC6G5-45571-00	REC6G5-45631-00	REC6E5-45633-01	REC6J9-45611-00	REC6J9-45332-00-CA	REC6G5-45501-21
L150C	1995	REC6G5-45551-00	REC6G5-45560-00	REC6G5-45571-00	REC6G5-45631-00	REC6E5-45633-01	REC6J9-45611-00	REC6J9-45332-00-CA	REC6G5-45501-21
L150F	1996-98	REC6G5-45551-00	REC6G5-45560-00	REC6G5-45571-00	REC6G5-45631-00	REC6E5-45633-01	REC6J9-45611-00	REC6J9-45332-00-CA	REC6G5-45501-21
L150F ETO	2000-01	REC6G5-45551-00	REC6G5-45560-00	REC6G5-45571-00	REC6G5-45631-00	REC6E5-45633-01	REC6J9-45611-00	REC6J9-45332-00-CA	REC6G5-45501-21
L150F ETOL L150F EOTX	2001	REC6G5-45551-00	REC6G5-45560-00	REC6G5-45571-00	REC6G5-45631-00	REC6E5-45633-01	REC6J9-45611-00	REC6J9-45332-00-CA	REC6G5-45501-21
LZ150P ETO	2000-06	REC6G5-45551-00	REC6G5-45560-00	REC6G5-45571-00	REC6G5-45631-00	REC6E5-45633-01	REC6J9-45611-00	REC6J9-45332-00-CA	REC6G5-45501-21
Z150P ETO	2000	REC6G5-45551-00	REC6G5-45560-00	REC6G5-45571-00	REC6G5-45631-00	REC6E5-45633-01	REC6J9-45611-00	REC6J9-45332-00-CA	REC6G5-45501-21
Z150P ETOL Z150P ETOX	2001-06	REC6G5-45551-00	REC6G5-45560-00	REC6G5-45571-00	REC6G5-45631-00	REC6E5-45633-01	REC6J9-45611-00	REC6J9-45332-00-CA	REC6G5-45501-21
Z150Q ETO	2000				REC6G5-45631-00	REC6E5-45633-01	REC6J9-45611-00	REC6J9-45332-00-CA	
Z150Q ETOL	1984-89				REC6G5-45631-00	REC6E5-45633-01	REC6J9-45611-00	REC6J9-45332-00-CA	
175A	1986-87	REC6G5-45551-00	REC6G5-45560-00	REC6G5-45571-00	REC6G5-45631-00	REC6E5-45633-01	REC6E5-45611-00		
175A ETO	1990-94	REC6G5-45551-00	REC6G5-45560-00	REC6G5-45571-00	REC6G5-45631-00	REC6E5-45633-01	REC6E5-45611-00		
175B	1995	REC6G5-45551-00	REC6G5-45560-00	REC6G5-45571-00	REC6G5-45631-00	REC6E5-45633-01	REC6J9-45611-00	REC6J9-45332-00-CA	REC6G5-45501-21
175B	1996-98	REC6G5-45551-00	REC6G5-45560-00	REC6G5-45571-00	REC6G5-45631-00	REC6E5-45633-01	REC6J9-45611-00	REC6J9-45332-00-CA	REC6G5-45501-21
175D	2000	REC6G5-45551-00	REC6G5-45560-00	REC6G5-45571-00	REC6G5-45631-00	REC6E5-45633-01	REC6J9-45611-00	REC6J9-45332-00-CA	REC6G5-45501-21
175D ETO	2001-03	REC6G5-45551-00	REC6G5-45560-00	REC6G5-45571-00	REC6G5-45631-00	REC6E5-45633-01	REC6J9-45611-00	REC6J9-45332-00-CA	REC6G5-45501-21
175D ETOL	2001-02	REC6G5-45551-00	REC6G5-45560-00	REC6G5-45571-00	REC6G5-45631-00	REC6E5-45633-01	REC6J9-45611-00	REC6J9-45332-00-CA	REC6G5-45501-21
175D ETOX	2001-06	REC6G5-45551-00	REC6G5-45560-00	REC6G5-45571-00	REC6G5-45631-00	REC6E5-45633-01	REC6J9-45611-00	REC6J9-45332-00-CA	REC6G5-45501-21
Z175G ETOX	2001	REC6G5-45551-00	REC6G5-45560-00	REC6G5-45571-00	REC6G5-45631-00	REC6E5-45633-01	REC6J9-45611-00	REC6J9-45332-00-CA	REC6G5-45501-21
Z175H ETOL	1984-89				REC6G5-45631-00	REC6E5-45633-01	REC6J9-45611-00	REC6J9-45332-00-CA	REC6G5-45501-21
200A	1986-87	REC6G5-45551-00	REC6G5-45560-00	REC6G5-45571-00	REC6G5-45631-00	REC6E5-45633-01	REC6J9-45611-00		
200A ETO	1990-94	REC6G5-45551-00	REC6G5-45560-00	REC6G5-45571-00	REC6G5-45631-00	REC6E5-45633-01	REC6J9-45611-00	REC6J9-45332-00-CA	REC6G5-45501-21
200B	1990-95	REC6G5-45551-00	REC6G5-45560-00	REC6G5-45571-00	REC6G5-45631-00	REC6E5-45633-01	REC6J9-45611-00	REC6J9-45332-00-CA	REC6G5-45501-21
200F	1996-98	REC6G5-45551-00	REC6G5-45560-00	REC6G5-45571-00	REC6G5-45631-00	REC6E5-45633-01	REC6J9-45611-00	REC6J9-45332-00-CA	REC6G5-45501-21
200F ETO	2000	REC6G5-45551-00	REC6G5-45560-00	REC6G5-45571-00	REC6G5-45631-00	REC6E5-45633-01	REC6J9-45611-00	REC6J9-45332-00-CA	REC6G5-45501-21
200F ETOL 200F ETOX	2001-06	REC6G5-45551-00	REC6G5-45560-00	REC6G5-45571-00	REC6G5-45631-00	REC6E5-45633-01	REC6J9-45611-00	REC6J9-45332-00-CA	REC6G5-45501-21
200G	1999				REC6G5-45631-00	REC6E5-45633-01	REC6J9-45611-00	REC6J9-45332-00-CA	
200G ETO	2000				REC6G5-45631-00	REC6E5-45633-01	REC6J9-45611-00	REC6J9-45332-00-CA	
200G ETOL	2001-03				REC6G5-45631-00	REC6E5-45633-01	REC6J9-45611-00	REC6J9-45332-00-CA	REC6G5-45501-21
F200A ETX	2002-06				REC69J-45631-00	REC61A-45633-00	REC69J-45611-00		
F200C ETX	2006				REC69J-45631-00	REC61A-45633-00	REC69J-45611-00		
FL200A ETX	2002-06				REC69J-45631-00	REC61A-45633-00	REC69J-45611-00		
FL200C ETX	2006				REC69J-45631-00	REC61A-45633-00	REC69J-45611-00		
L200A	1988-89	REC6G5-45551-00	REC6G5-45560-00	REC6G5-45571-00	REC6G5-45631-00	REC6E5-45633-01			
L200B	1990-94	REC6G5-45551-00	REC6G5-45560-00	REC6G5-45571-00	REC6G5-45631-00	REC6E5-45633-01	REC69J-45611-00	REC6J9-45332-00-CA	REC6G5-45501-21
L200B	1995	REC6G5-45551-00	REC6G5-45560-00	REC6G5-45571-00	REC6E5-45631-00	REC6E5-45633-01	REC69J-45611-00	REC6J9-45332-00-CA	REC6G5-45501-21
L200F	1996-98	REC6G5-45551-00	REC6G5-45560-00	REC6G5-45571-00	REC6G5-45631-00	REC6E5-45633-01	REC69J-45611-00	REC6J9-45332-00-CA	REC6G5-45501-21
L200F ETO	2000	REC6G5-45551-00	REC6G5-45560-00	REC6G5-45571-00	REC6G5-45631-00	REC6E5-45633-01	REC69J-45611-00	REC6J9-45332-00-CA	REC6G5-45501-21
L200F ETOL	2001-06	REC6G5-45551-00	REC6G5-45560-00	REC6G5-45571-00	REC6G5-45631-00	REC6E5-45633-01	REC69J-45611-00	REC6J9-45332-00-CA	REC6G5-45501-21
FL200F ETOX	2001	REC6G5-45551-00	REC6G5-45560-00	REC6G5-45571-00	REC6G5-45631-00	REC6E5-45633-01	REC69J-45611-00	REC6J9-45332-00-CA	REC6G5-45501-21
LZ200N ETC	2001-07	REC6G5-45551-00	REC6G5-45560-00	REC6G5-45571-00	REC6G5-45631-00	REC6E5-45633-01	REC69J-45611-00	REC6J9-45332-00-CA	REC6G5-45501-21
Z200N ETO	2000	REC6G5-45551-00	REC6G5-45560-00	REC6G5-45571-00	REC6G5-45631-00	REC6E5-45633-01	REC69J-45611-00	REC6J9-45332-00-CA	REC6G5-45501-21
Z200N ETOL	2001-06	REC6G5-45551-00	REC6G5-45560-00	REC6G5-45571-00	REC6G5-45631-00	REC6E5-45633-01	REC69J-45611-00	REC6J9-45332-00-CA	REC6G5-45501-21
Z200N ETOX	2001-06	REC6G5-45551-00	REC6G5-45560-00	REC6G5-45571-00	REC6G5-45631-00	REC6E5-45633-01	REC69J-45611-00	REC6J9-45332-00-CA	REC6G5-45501-21
Z200P ETOL	2003-06	REC6G5-45551-00	REC6G5-45560-00	REC6G5-45571-00	REC6G5-45631-00	REC6E5-45633-01	REC69J-45611-00	REC6J9-45332-00-CA	
220A	1984-86				REC6G5-45631-00	REC6E5-45633-01	REC6E5-45611-00	REC6J9-45332-00-CA	REC6G5-45501-21
225A	1987-89					REC6E5-45633-01	REC6J9-45611-00	REC6J9-45332-00-CA	REC6G5-45501-21
225B	1990-94				REC6G5-45631-00	REC6E5-45633-01	REC69J-45611-00	REC6J9-45332-00-CA	REC6G5-45501-21
225B	1995				REC6G5-45631-00	REC6E5-45633-01	REC69J-45611-00	REC6J9-45332-00-CA	REC6G5-45501-21
225D	1996-98				REC6G5-45631-00	REC6E5-45633-01	REC6E5-45611-00	REC6J9-45332-00-CA	REC6G5-45501-21
225D ETO	2000				REC6G5-45631-00	REC6E5-45633-01	REC69J-45611-00	REC6J9-45332-00-CA	REC6G5-45501-21
225D ETOL 225D ETOX	2001-03				REC6G5-45631-00	REC6E5-45633-01	REC69J-45611-00	REC6J9-45332-00-CA	REC6G5-45501-21
225G ETOL	2001-03				REC6G5-45631-00	REC6E5-45633-01	REC69J-45611-00	REC6J9-45332-00-CA	

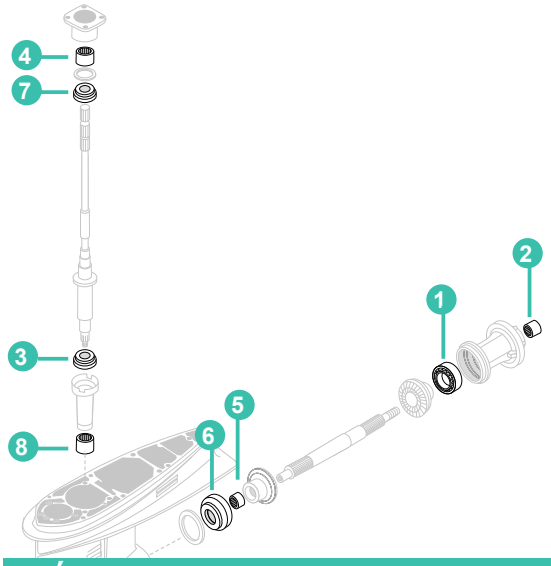

GUÍA RODAMIENTOS — STERN DRIVE BEARING APPLICATION — GUIDA CUSCINETTI TRASMISIONE — GUIDE ROULEMENTS D'EMBASE

		1	2	3	4	5	6	7	8
F8A	1986-89				REC93315-317U2		REC93332-00005		REC93306-00501
F8B	1985-99	REC93315-314V8		REC93341-214U1	REC93315-317U2		REC93332-00005		REC93306-00501
F8B E F8B EH F8B MH	1999	REC93315-314V8		REC93341-41414	REC93315-317U2		REC93332-00005		REC93306-00501
FT8D EL FT8D EPL	2001-04	REC93315-314V8		REC93341-41414	REC93315-317U2		REC93332-00005		REC93306-00501
FT8D EPX	2001-02	REC93315-314V8		REC93341-41414	REC93315-317U2		REC93332-00005		REC93306-00501
FT8D EX FT8D MHL FT8D MHX	2001-04	REC93315-314V8		REC93341-41414	REC93315-317U2		REC93332-00005		REC93306-00501
9.9D	1985-89	REC93315-314V8		REC93341-41414	REC93315-317U2		REC93332-00005		REC93306-00501
9.9D	1985-95	REC93315-314V8		REC93341-214U1	REC93315-317U2		REC93332-00005		REC93306-00501
9.9D	1990-95	REC93315-314V8		REC93341-41414	REC93315-317U2		REC93332-00005		REC93306-00519
9.9F	1995-99	REC93315-314V8		REC93341-41414	REC93315-317U2		REC93332-00005		REC93306-00501
9.9F MH	2000	REC93315-314V8		REC93341-41414	REC93315-317U2		REC93332-00005		REC93306-00501
9.9F MHL 9.9F MHS	2001-06	REC93315-314V8		REC93341-41414	REC93315-317U2		REC93332-00005		REC93306-00501
9.9F WC 9.9F WH	2000	REC93315-314V8		REC93341-41414	REC93315-317U2		REC93332-00005		REC93306-00501
9.9F WHL 9.9F WHS	2001	REC93315-314V8		REC93341-41414	REC93315-317U2		REC93332-00005		REC93306-00501
F9.9B	1985-97	REC93315-314V8		REC93341-214U1	REC93315-317U2		REC93332-00005		REC93306-00501
F9.9B E F9.9B EH F9.9B MH	1999	REC93315-314V8		REC93341-41414	REC93315-317U2		REC93332-00005		REC93306-00501
F9.9C	1998	REC93315-314V8		REC93341-41414	REC93315-317U2		REC93332-00005		REC93306-00501
F9.9C E F9.9C EH	2000	REC93315-314V8		REC93341-41414	REC93315-317U2		REC93332-00005		REC93306-00501
F9.9C EL F9.9C ES	2001-06	REC93315-314V8		REC93341-41414	REC93315-317U2		REC93332-00005		REC93306-00501
F9.9C MH	2000	REC93315-314V8		REC93341-41414	REC93315-317U2		REC93332-00005		REC93306-00501
F9.9C MHL F9.9C MHS	2001-06	REC93315-314V8		REC93341-41414	REC93315-317U2		REC93332-00005		REC93306-00501
FT9.9A	1999				REC93315-317U2		REC93332-00005		REC93306-00501
FT9.9D	1999	REC93315-314V8		REC93341-41414	REC93315-317U2		REC93332-00005		REC93306-00501
FT9.9D E FT9.9D EH	2000	REC93315-314V8		REC93341-41414	REC93315-317U2		REC93332-00005		REC93306-00501
FT9.9D EHL FT9.9D EHX	2001	REC93315-314V8		REC93341-41414	REC93315-317U2		REC93332-00005		REC93306-00501
FT9.9D EL	2001-06	REC93315-314V8		REC93341-41414	REC93315-317U2		REC93332-00005		REC93306-00501
FT9.9D EP	2000	REC93315-314V8		REC93341-41414	REC93315-317U2		REC93332-00005		REC93306-00501
FT9.9D EPL FT9.9D EPX	2001-02	REC93315-314V8		REC93341-41414	REC93315-317U2		REC93332-00005		REC93306-00501
FT9.9D ES	2001	REC93315-314V8		REC93341-41414	REC93315-317U2		REC93332-00005		REC93306-00501
FT9.9D EX	2001-06	REC93315-314V8		REC93341-41414	REC93315-317U2		REC93332-00005		REC93306-00501
FT9.9D MH	2000	REC93315-314V8		REC93341-41414	REC93315-317U2		REC93332-00005		REC93306-00501
FT9.9D MHL	2001-06	REC93315-314V8		REC93341-41414	REC93315-317U2		REC93332-00005		REC93306-00501
FT9.9D MHX	2001	REC93315-314V8		REC93341-41414	REC93315-317U2		REC93332-00005		REC93306-00501
13.5A	1999	REC93315-314V8		REC93341-41414	REC93315-317U2		REC93332-00005		REC93306-00501
13.5A MH	2000	REC93315-314V8		REC93341-41414	REC93315-317U2		REC93332-00005		REC93306-00501
13.5A MHL 13.5A MHS	2001-04	REC93315-314V8		REC93341-41414	REC93315-317U2		REC93332-00005		REC93306-00501
13.5A WH	2000	REC93315-314V8		REC93341-41414	REC93315-317U2		REC93332-00005		REC93306-00501
F13.5A EHL	2005-06	REC93315-314V8			REC93315-317U2		REC93332-00005		REC93306-00501
F13.5A EPL	2005	REC93315-314V8		REC93341-41414	REC93315-317U2		REC93332-00005		REC93306-00501
F13.5A EPS	2005	REC93315-314V8			REC93315-317U2		REC93332-00005		REC93306-00501
F13.5A MH	2001	REC93315-314V8			REC93315-317U2				REC93306-00501
F13.5A MHL F13.5A MHS	2002-06	REC93315-314V8		REC93341-41414	REC93315-317U2		REC93332-00005		REC93306-00501

		1	2	3	4	5	6	7	8
15D	1985-95	REC93315-314V8		REC93341-214U1	REC93315-317U2		REC93332-00005		REC93306-00501
15D	1990-95	REC93315-314V8		REC93341-41414	REC93315-317U2		REC93332-00005		REC93306-00501
15F	1995-99	REC93315-314V8		REC93341-41414	REC93315-317U2		REC93332-00005		REC93306-00501
15F MH	2000	REC93315-314V8		REC93341-41414	REC93315-317U2		REC93332-00005		REC93306-00501
15F MHL 15F MHS	2001-06	REC93315-314V8		REC93341-41414	REC93315-317U2		REC93332-00005		REC93306-00501
15F WC	2000	REC93315-314V8		REC93341-41414	REC93315-317U2		REC93332-00005		REC93306-00501
15F WCL	2001-03	REC93315-314V8		REC93341-41414	REC93315-317U2		REC93332-00005		REC93306-00501
15F WCS	2001-02	REC93315-314V8		REC93341-41414	REC93315-317U2		REC93332-00005		REC93306-00501
F15A	1998	REC93315-314V8		REC93341-41414	REC93315-317U2		REC93332-00005		REC93306-00501
F15A E F15A EH	1998-00	REC93315-314V8		REC93341-41414	REC93315-317U2		REC93332-00005		REC93306-00501
F15A EHS F15A EHL F15A EL	2001-06	REC93315-314V8		REC93341-41414	REC93315-317U2		REC93332-00005		REC93306-00501
F15A EP	2000	REC93315-314V8		REC93341-41414	REC93315-317U2		REC93332-00005		REC93306-00501
F15A EPL	2001-06	REC93315-314V8		REC93341-41414	REC93315-317U2		REC93332-00005		REC93306-00501
F15A EPS	2001-06	REC93315-314V8		REC93341-41414	REC93315-317U2		REC93332-00005		REC93306-00501
F15A ES	2001-06	REC93315-314V8		REC93341-41414	REC93315-317U2		REC93332-00005		REC93306-00501
F15A MH	1998-00	REC93315-314V8		REC93341-41414	REC93315-317U2		REC93332-00005		REC93306-00501
F15A MHL	2001-06	REC93315-314V8		REC93341-41414	REC93315-317U2		REC93332-00005		REC93306-00501
F15A MHS	2001-06	REC93315-314V8		REC93341-41414	REC93315-317U2		REC93332-00005		REC93306-00501
20C	1985-93	REC93315-017U4			REC93315-22004		REC93332-00005		REC93306-00612
20C M	1990-97	REC93315-017U4			REC93315-22004		REC93332-00005		REC93306-00612
20C MH	1998	REC93315-017U4			REC93315-22004		REC93332-00005		REC93306-00612
20C MHL 20C MHS	2001-02	REC93315-017U4			REC93315-22004		REC93332-00005		REC93306-00612
20D	1988		REC93315-22004		REC93315-22004		REC93332-00005		REC93306-00612
20D MHOL 20D MHOS	2001-06		REC93315-22004		REC93315-22004		REC93332-00005		REC93306-00612
20D WOL 20D WOS	2001		REC93315-22004		REC93315-22004		REC93332-00005		REC93306-00612
F20A	1998-99	REC93315-220V7	REC93332-000W5		REC93315-22004		REC93332-00005		REC93306-00612
F20A E	2000		REC93332-000W5		REC93315-22004		REC93332-00005		REC93306-00612
F20A EH	2000	REC93315-220V7	REC93332-000W5		REC93315-22004		REC93332-00005		REC93306-00612
F20A EHS	2001	REC93315-220V7			REC93315-22004		REC93332-00005		REC93306-00612
F20A EL	2001	REC93315-220V7	REC93332-000W5		REC93315-22004		REC93332-00005		REC93306-00612
F20A ES	2001-06	REC93315-220V7	REC93332-000W5		REC93315-22004		REC93332-00005		REC93306-00612
F20A ET	2000	REC93315-220V7	REC93332-000W5		REC93315-22004		REC93332-00005		REC93306-00612
F20A ETL	2003-06	REC93315-220V7	REC93332-000W5		REC93315-22004		REC93332-00005		REC93306-00612
F20A MH F20A MHL	2000	REC93315-220V7	REC93332-000W5		REC93315-22004		REC93332-00005		REC93306-00612
F20A MHS	2001	REC93315-220V7	REC93332-000W5		REC93315-22004		REC93332-00005		REC93306-00612
25B	1994-95	REC93315-325V1	REC93332-00001		REC93317-22204		REC93332-000W7		REC93306-00702
25B MHL 25B MHS	2001-06	REC93315-220V7	REC93332-000W5		REC93315-22004		REC93332-00005		REC93306-00612
25B WCS	2001-02	REC93315-220V7	REC93332-000W5		REC93315-22004		REC93332-00005		REC93306-00612
25D	1985-87	REC93315-017U4			REC93315-22004		REC93332-00005		REC93306-00612
25D M	1990-97	REC93315-017U4			REC93315-22004		REC93332-00005		REC93306-00612
25D MH	1998	REC93315-017U4			REC93315-22004		REC93332-00005		REC93306-00612
25D MHL 25D MHS	2001	REC93315-017U4			REC93315-22004		REC93332-00005		REC93306-00612
25J	1987-91	REC93315-220V7	REC93332-00023		REC93315-22004				REC93306-00612
25J	1992-00		REC93332-00001						REC93306-00612
25N	1988		REC93315-22004		REC93315-22004		REC93332-00005		REC93306-00612
25N MHOL 25N MHOS	2001-06		REC93315-22004		REC93315-22004		REC93332-00005		REC93306-00612
25N WOL	2001-03		REC93315-22004		REC93315-22004		REC93332-00005		REC93306-00612
25N WOS	2001-03				REC93315-22004		REC93332-00005		REC93306-00612
25Q	1988-91	REC93315-32224	REC93332-00023						REC93306-00612
25Q	1990-94	REC93315-32224	REC93332-00001		REC93317-22204				REC93306-00702
25V	1996-98	REC93315-220V7	REC93332-000W5		REC93315-22004		REC93332-00005		REC93306-00612
25V MHL 25V MHS 25V WVS	2001	REC93315-220V7	REC93332-000W5		REC93315-22004		REC93332-00005		REC93306-00612
F25A E F25A EH	2000	REC93315-220V7	REC93332-000W5		REC93315-22004		REC93332-00005		REC93306-00612
F25A EHL	2001-02	REC93315-220V7	REC93332-000W5		REC93315-22004		REC93332-00005		REC93306-00612
F25A EHS	2001	REC93315-220V7	REC93332-000W5		REC93315-22004		REC93332-00005		REC93306-00612
F25A EL F25A ES	2001-06	REC93315-220V7	REC93332-000W5		REC93315-22004		REC93332-00005		REC93306-00612
F25A ET	2000	REC93315-220V7	REC93332-000W5		REC93315-22004		REC93332-00005		REC93306-00612
F25A ETL	2001-06	REC93315-220V7	REC93332-000W5		REC93317-22204		REC93332-00005		REC93306-00612
F25A MH	2000	REC93315-220V7	REC93332-000W5		REC93315-22004		REC93332-00005		REC93306-00612
F25A MHL F25A MHS	2001-06	REC93315-220V7	REC93332-000W5		REC93315-22004		REC93332-00005		REC93306-00612
FT25B ED	2000	REC93315-32224	REC93332-00001		REC93317-22204		REC93332-00003		REC93306-001U1
FT25B EDL FT25B EDX	2001-02	REC93315-32224	REC93332-00001		REC93317-22204		REC93332-00003		REC93306-001U1

		1	2	3	4	5	6	7	8
FT25B ET	2000	REC93315-32224	REC93332-00001		REC93317-22204		REC93332-00003		REC93306-001U1
FT25B ETL	2001-06	REC93315-32224	REC93332-00001		REC93317-22204		REC93332-00003		REC93306-001U1
FT25B ETX	2001-02	REC93315-32224	REC93332-00001		REC93317-22204		REC93332-00003		REC93306-001U1
30A	1985	REC93315-017U4			REC93315-22004		REC93332-00005		REC93306-00612
30A M	1990-92	REC93315-017U4		REC93315-22004	REC93315-22004		REC93332-00005		REC93306-00612
30D	1986-00	REC93315-220V7	REC93332-00023		REC93315-22004				REC93306-00612
30D EOL 30D EOL 30D ETOL	2001-06	REC93315-220V7	REC93332-00001		REC93315-22004				REC93306-00612
30D MHOL 30D MHOS	2001-06	REC93315-220V7	REC93332-00001		REC93315-22004				REC93306-00612
30D OL	2001-03		REC93332-00001		REC93315-22004				REC93306-00612
30D EOS	2001-06		REC93332-00001		REC93315-22004				REC93306-00612
30G	1996-98	REC93315-220V7	REC93332-000W5		REC93315-22004		REC93332-00005		REC93306-00612
30G MHS 30G WCS	2001	REC93315-220V7	REC93332-000W5		REC93315-22004		REC93332-00005		REC93306-00612
30H MHS 30H WCS	2001-02	REC93315-220V7	REC93332-000W5		REC93315-22004		REC93332-00005		REC93306-00612
F30A ETL F30A ETS	2001-06	REC93315-32224	REC93332-00001		REC93317-22204		REC93332-00003		REC93306-001U1
F30A MHDL F30A MHDS	2001-06	REC93315-32224	REC93332-00001		REC93317-22204		REC93332-00003		REC93306-001U1
40G WH	2003	REC93315-324U1	REC93315-217U0	REC93390-000U0			REC93332-000U0		
40H	1985-90	REC93315-32224	REC93332-00023		REC93317-22204				REC93306-00702
40H	1991-93	REC93315-32224	REC93332-00001		REC93317-22204				REC93306-00702
40Q	1993	REC93315-32224	REC93332-00001		REC93317-22204		REC93332-00003		REC93306-00702
40Q E	1992	REC93315-32224	REC93332-00023		REC93317-22204		REC93332-00003		REC93306-00702
40Q M	1990	REC93315-32224	REC93332-00023		REC93317-22204		REC93332-00003		REC93306-00702
40R MHO	2000	REC93315-32224	REC93332-00001		REC93317-22204		REC93332-00003		REC93306-001U1
40R ROS	2001	REC93315-32224	REC93332-00001		REC93317-22204		REC93332-00003		REC93306-001U1
40V	1995-98	REC93315-32224	REC93332-00001		REC93317-22204		REC93332-00003		REC93306-001U1
40V EO	2000	REC93315-32224	REC93332-00001		REC93317-22204		REC93332-00003		REC93306-001U1
40V EOL 40V EOS	2001-06	REC93315-32224	REC93332-00001		REC93317-22204		REC93332-00003		REC93306-001U1
40V ETO	2000	REC93315-32224	REC93332-00001		REC93317-22204		REC93332-00003		REC93306-001U1
40V ETOL 40V ETOS	2001-03	REC93315-32224	REC93332-00001		REC93317-22204		REC93332-00003		REC93306-001U1
40V MHOL 40V MHOS	2001-06	REC93315-32224	REC93332-00001		REC93317-22204		REC93332-00003		REC93306-001U1
40V MO	2000	REC93315-32224	REC93332-00001		REC93317-22204		REC93332-00003		REC93306-001U1
40X	1998	REC93315-32224	REC93332-00001		REC93317-22204		REC93332-00003		REC93306-001U1
40X MH	2000	REC93315-32224	REC93332-00001		REC93317-22204		REC93332-00003		REC93306-001U1
40X MHL	2001-06	REC93315-32224	REC93332-00001		REC93317-22204		REC93332-00003		REC93306-001U1
40X MHS	2001-02	REC93315-32224	REC93332-00001		REC93317-22204		REC93332-00003		REC93306-001U1
40X W	2000	REC93315-32224	REC93332-00001		REC93317-22204		REC93332-00003		REC93306-001U1
40X WL 40X WS	2001	REC93315-32224	REC93332-00001		REC93317-22204		REC93332-00003		REC93306-001U1
40X WT	2000		REC93332-00001		REC93317-22204		REC93332-00003		REC93306-001U1
40X WTL	2001-03	REC93315-32224	REC93332-00001		REC93317-22204		REC93332-00003		REC93306-001U1
40Y ETOL	2001-06	REC93315-32224	REC93332-00001		REC93317-22204		REC93332-00003		REC93306-001U1
40Y MHOS	2001-06	REC93315-32224	REC93332-00001		REC93317-22204		REC93332-00003		REC93306-001U1
E40G MH	2003	REC93315-324U1	REC93315-217U0	REC93390-000U0			REC93332-000U0		REC93332-000U0
E40G MHL	2003	REC93315-324U1	REC93315-217U0	REC93390-000U0			REC93332-000U0		
E40G MHS	2003	REC93315-324U1	REC93315-217U0	REC93390-000U0			REC93332-000U0		REC93332-000U0
F40A F40A ED	1999	REC93315-32224	REC93332-00001		REC93317-22204		REC93332-00003		REC93306-001U1
F40A EDL	2001	REC93315-32224	REC93332-00001		REC93317-22204		REC93332-00003		REC93306-001U1
F40A ET	1999	REC93315-32224	REC93332-00001		REC93317-22204		REC93332-00003		REC93306-001U1
F40A ETL	2001-02	REC93315-32224	REC93332-00001		REC93317-22204		REC93332-00003		REC93306-001U1
F40A ED	1999	REC93315-325V1	REC93332-00001		REC93317-22204		REC93332-00003		REC93306-207U0
F40B ED	2000-01	REC93315-32224	REC93332-00001		REC93317-22204		REC93332-00003		REC93306-001U1
F40B EDL	2001-06	REC93315-32224	REC93332-00001		REC93317-22204		REC93332-00003		REC93306-001U1
F40B EDS	2001-02	REC93315-32224	REC93332-00001		REC93317-22204		REC93332-00003		REC93306-001U1
F40B ET	2000-01	REC93315-32224	REC93332-00001		REC93317-22204		REC93332-00003		REC93306-001U1
F40B ETL F40B ETS	2001-06	REC93315-32224	REC93332-00001		REC93317-22204		REC93332-00003		REC93306-001U1
F40B MHD	2000	REC93315-32224	REC93332-00001		REC93317-22204		REC93332-00003		REC93306-001U1
F40B MHDL F40B MHDS	2001-06	REC93315-32224	REC93332-00001		REC93317-22204		REC93332-00003		REC93306-001U1
F40C ETL	2002-06	REC93315-32224	REC93332-00001		REC93317-22204				
F45A	1996-99	REC93315-32224	REC93332-00001		REC93317-22204		REC93332-000W7		REC93306-001U1
F45A ED F45A ET	2000	REC93315-32224	REC93332-00001		REC93317-22204		REC93332-000W7		REC93306-001U1
50D	1984-90	REC93315-32224	REC93332-00023		REC93317-22204				REC93306-00702
50D	1991-93	REC93315-32224	REC93332-00001						REC93306-00702
50G	1993-98	REC93315-325V1	REC93332-00001		REC93317-22204		REC93332-000W7		REC93306-00702
50G ETO	2000	REC93315-325V1	REC93332-00001		REC93317-22204		REC93332-00003		REC93306-00702
50G ETOL	2001-06	REC93315-325V1	REC93332-00001		REC93317-22204		REC93332-00003		REC93306-00702

		1	2	3	4	5	6	7	8
50H	1995-98	REC93315-32224	REC93332-00001		REC93317-22204		REC93332-00003		REC93306-001U1
50H EDO	2000	REC93315-32224	REC93332-00001		REC93317-22204		REC93332-00003		REC93306-001U1
50H EDOL 50H EDOS	2001-02	REC93315-32224	REC93332-00001		REC93317-22204		REC93332-00003		REC93306-001U1
50H MDO 50H MO	2000	REC93315-32224	REC93332-00001		REC93317-22204		REC93332-00003		REC93306-001U1
F50A	1995	REC93315-32224	REC93332-000U3		REC93317-22204		REC93332-00003		REC93306-001U1
F50A ED	2000	REC93315-32224	REC93332-00001	06	REC93317-22204		REC93332-00003		REC93306-001U1
F50A EDL	2001-06	REC93315-32224	REC93332-00001		REC93317-22204		REC93332-00003		REC93306-001U1
F50A ET	2000	REC93315-32224	REC93332-00001		REC93317-22204		REC93332-00003		REC93306-001U1
F50A ETL	2001-06	REC93315-32224	REC93332-00001		REC93317-22204		REC93332-00003		REC93306-001U1
F50B	1996-97	REC93315-32224	REC93332-00001		REC93317-22204		REC93332-00003		REC93306-001U1
F50B	1998-99	REC93315-325V1	REC93332-000U3		REC93317-22204		REC93332-000W7		REC93306-001U1
F50B ET	2000	REC93315-32224	REC93332-00001		REC93317-22204		REC93332-00003		REC93306-001U1
F50F EDL F50F ETL	2005-06	REC93315-32224	REC93332-00001		REC93317-22204				REC93306-001U1
FT50B	1998-99	REC93315-32224	REC93332-00001		REC93317-22204		REC93332-000W7		REC93306-001U1
FT50B ETL	2001-02	REC93315-32224	REC93332-00001		REC93317-22204		REC93332-00003		REC93306-001U1
FT50C ETL	2002-06	REC93315-32224	REC93332-00001		REC93317-22204		REC93332-00003		REC93306-001U1
FT50G ETL	2005-06		REC93332-000U3		REC93317-325U0				REC93306-001U1
55B	1993-98	REC93315-32224	REC93332-00001		REC93317-22204		REC93332-00003		REC93306-00702
55B E	1990-91	REC93315-32224	REC93332-00001		REC93317-22204		REC93332-00003		REC93306-00702
55B E	1992	REC93315-32224	REC93332-00023		REC93317-22204		REC93332-00003		REC93306-00702
55B EHD	2000	REC93315-32224	REC93332-00001		REC93317-22204		REC93332-00003		REC93306-00702
55B ET	2000	REC93315-32224	REC93332-00001		REC93317-22204		REC93332-00003		REC93306-00702
55B ETL	2001-02	REC93315-32224	REC93332-00001		REC93317-22204	-06	REC93332-00003		REC93306-00702
60F	1984-98	REC93315-325V1	REC93332-00001		REC93317-22204		REC93332-000W7		REC93306-00702
60F EO 60F ETO	2000	REC93315-325V1	REC93332-00001		REC93317-22204		REC93332-00003		REC93306-00702
60F ETOL	2001-06	REC93315-325V1	REC93332-00001		REC93317-22204		REC93332-00003		REC93306-00702
E60H MHDL	2001-06	REC93315-325V1	REC93332-000U3		REC93317-325U0		REC93332-000W7		REC93306-207U0
F60A ETL	2002-06	REC93315-32224	REC93332-00001		REC93317-22204				REC93306-001U1
F60C ETL	2005-06	REC93315-32224	REC93332-00001		REC93317-22204				REC93306-001U1
FT60B ETL	2003-06		REC93332-000U3		REC93317-325U0				REC93306-207U0
FT60D ETL	2005-06		REC93332-000U3		REC93317-325U0				REC93306-207U0
70B	1984-98	REC93315-325V1	REC93332-00001		REC93317-22204		REC93332-000W7		REC93306-00702
70B EDOL	2001	REC93315-325V1	REC93332-00001		REC93317-22204		REC93332-00003		REC93306-00702
70B EO 70B ETO	2000	REC93315-325V1	REC93332-00001		REC93317-22204		REC93332-00003		REC93306-00702
70B ETOL	2001-06	REC93315-325V1	REC93332-00001		REC93317-22204		REC93332-00003		REC93306-00702
75A	1990-98	REC93315-325V1	REC93332-000U3		REC93317-325U0		REC93332-000W7		REC93306-207U0
75A E	1990-00	REC93315-325V1	REC93332-000U3		REC93317-325U0		REC93332-000U5		REC93306-207U0
75A EDL	2001-06	REC93315-325V1	REC93332-000U3		REC93317-325U0		REC93332-000W7		REC93306-207U0
75A EM	1992-93		REC93332-000U3		REC93317-325U0		REC93332-000U5		REC93306-207U0
75A ET	2000	REC93315-325V1			REC93317-325U0		REC93332-000U5		REC93306-207U0
75A ETL	2001-02	REC93315-325V1	REC93332-000U3		REC93317-325U0		REC93332-000W7		REC93306-207U0
75A MHD	2000	REC93315-325V1	REC93332-000U3		REC93317-325U0				REC93306-207U0
75C	1998	REC93315-325V1			REC93317-325U0		REC93332-000W7		REC93306-207U0
75C ETO	2000	REC93315-325V1	REC93332-000U3		REC93317-325U0		REC93332-000W7		REC93306-207U0
75C ETOL	2001-06	REC93315-325V1	REC93332-000U3		REC93317-325U0		REC93332-000W7		REC93306-207U0
80A	1985-96	REC93315-325V1	REC93332-000U3		REC93317-325U0		REC93332-000U5		REC93306-207U0
F80A	1999		REC93332-000U3		REC93317-325U0	REC93317-322V0			REC93306-207U0
F80A ET	2000		REC93332-000U3		REC93317-325U0	REC93317-322V0			REC93306-207U0
F80A ETL	2001-06		REC93332-000U3		REC93317-325U0	REC93317-322V0			REC93306-207U0
F80A ETX	2001		REC93332-000U3		REC93317-325U0	REC93317-322V0			REC93306-207U0
F80B ETL	2005-06		REC93332-000U3		REC93317-325U0	REC93317-322V0			REC93306-207U0
85A	1996-98	REC93315-325V1	REC93332-000U3		REC93317-325U0		REC93332-000W7		REC93306-207U0
85A E	1990-00	REC93315-325V1	REC93332-000U3		REC93317-325U0		REC93332-000U5		REC93306-207U0
85A ET	2000	REC93315-325V1	REC93332-000U3		REC93317-325U0		REC93332-000U5		REC93306-207U0
85A ETL	2001-02	REC93315-325V1	REC93332-000U3		REC93317-325U0		REC93332-000W7		REC93306-207U0
90A	1984-98	REC93315-325V1	REC93332-000U3		REC93317-325U0		REC93332-000W7		REC93306-207U0
90A ETO	2000	REC93315-325V1	REC93332-000U3		REC93317-325U0		REC93332-000U7		REC93306-207U0
90A ETOL	2001-06	REC93315-325V1	REC93332-000U3		REC93317-325U0		REC93332-000W7		REC93306-207U0
100A	1998	REC93315-628U9	REC93315-430V5 REC93341-930V2		REC93315-430U8	REC93315-425U7	REC93332-000U7		REC93306-208U0
100A ETO	2000	REC93315-628U9	REC93317-330U2 REC93341-930V2		REC93315-430U8	REC93315-425U7			REC93306-208U0
100A ETOL	2001	REC93315-628U9	REC93317-330U2 REC93341-930V2		REC93315-430U8	REC93315-425U7	REC93332-000U7		REC93306-208U0
F100A	1999		REC93332-000U3		REC93317-325U0	REC93317-322V0			REC93306-207U0
F100A ET	2000		REC93332-000U3		REC93317-325U0	REC93317-322V0			REC93306-207U0
F100A ETL	2001-06		REC93332-000U3		REC93317-325U0	REC93317-322V0			REC93306-207U0
F100A ETX	2001		REC93332-000U3		REC93317-325U0	REC93317-322V0			REC93306-207U0

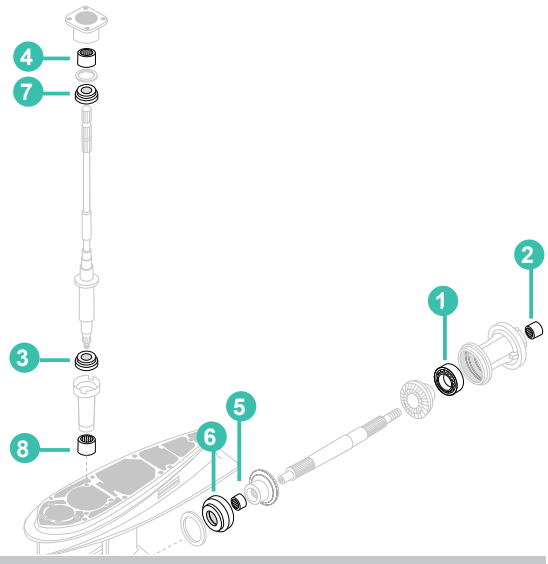

		1	2	3	4	5	6	7	8
F100B ETX	2005-06	REC93315-628U9	REC93317-330U2 REC93341-930V2		REC93315-430U8	REC93315-425U7	REC93332-000U7		REC93306-208U0
F100D ETL	2005-06		REC93332-000U3		REC93317-325U0	REC93317-322V0			REC93306-207U0
115A	1984-87	REC93315-628U9	REC93317-330U2 REC93341-930V2		REC93315-430U8	REC93315-425U7	REC93332-000U7		REC93306-208U0
115B	1988-95	REC93315-628U9	REC93317-330U2 REC93341-930V2		REC93315-430U8	REC93315-425U7	REC93332-000U7		REC93306-208U0
115B	1996	REC93315-628U9	REC93315-430V5 REC93341-930V2		REC93315-430U8	REC93315-425U7	REC93332-000U7		REC93306-208U0
115B ETO	1997-98	REC93315-628U9	REC93315-430V5 REC93341-930V2		REC93315-430U8	REC93315-425U7	REC93332-000U7		REC93306-208U0
115B ETO	1999-00	REC93315-628U9	REC93317-330U2			REC93315-425U7	REC93332-000U7		REC93306-208U0
115B ETOL	2001-02	REC93315-628U9	REC93317-330U2 REC93341-930V2		REC93315-430U8	REC93315-425U7	REC93332-000U7		REC93306-208U0
115C	1990-95	REC93315-628U9	REC93317-330U2 REC93341-930V2		REC93315-430U8	REC93315-425U7	REC93332-000U7	REC93315-430V5	REC93306-208U0
115C ETO	2000	REC93315-628U9	REC93317-330U2 REC93341-930V2		REC93315-430U8	REC93315-425U7	REC93332-000U7	REC93315-430V5	REC93306-208U0
115C ETOL	2001-06	REC93315-628U9	REC93317-330U2 REC93341-930V2		REC93315-43061	REC93315-425U7	REC93332-000U7	REC93315-430V5	REC93306-208U0
115C ETOX	2001-02	REC93315-628U9	REC93317-330U2 REC93341-930V2		REC93315-430U8	REC93315-425U7	REC93332-000U7	REC93315-430V5	REC93306-208U0
F115A ET	2000	REC93315-628U9	REC93317-330U2 REC93341-930V2		REC93315-430U8	REC93315-425U7	REC93332-000U7	REC93315-430V5	REC93306-208U0
F115A ETL F115A ETX	2001-06	REC93315-628U9	REC93317-330U2 REC93341-930V2		REC93315-430U8	REC93315-425U7	REC93332-000U7	REC93315-430V5	REC93306-208U0
FL115A ET	2000	REC93315-628U9	REC93317-330U2 REC93341-930V2		REC93315-430U8	REC93315-425U7	REC93332-000U7	REC93315-430V5	REC93306-208U0
FL115A ETX	2001-06	REC93315-628U9	REC93317-330U2 REC93341-930V2		REC93315-430U8	REC93315-425U7	REC93332-000U7	REC93315-430V5	REC93306-208U0
130B	1990-94	REC93315-628U9	REC93317-330U2 REC93341-930V2		REC93315-430U8	REC93315-425U7	REC93332-000U7	REC93315-430V5	REC93306-208U0
130B ETO	2000	REC93315-628U9	REC93317-330U2 REC93341-930V2		REC93315-430U8	REC93315-425U7	REC93332-000U7	REC93315-430V5	REC93306-208U0
130B ETOL	2001-06	REC93315-628U9	REC93317-330U2 REC93341-930V2		REC93315-43061	REC93315-425U7	REC93332-000U7	REC93315-430V5	REC93306-208U0
130B ETOX	2001	REC93315-628U9	REC93317-330U2 REC93341-930V2		REC93315-430U8	REC93315-425U7	REC93332-000U7	REC93315-430V5	REC93306-208U0
L130B	1991-94	REC93315-628U9	REC93317-330U2 REC93341-930V2		REC93315-430U8	REC93315-425U7	REC93332-000U7	REC93315-430V5	REC93306-208U0
L130B	1995-98		REC93315-430V5 REC93341-930V2		REC93315-430U8	REC93315-425U7	REC93332-000U7		REC93306-208U0
L130B ETO	2000	REC93315-628U9	REC93317-330U2		REC93315-430U8	REC93315-425U7	REC93332-000U7	REC93315-430V5	REC93306-208U0
L130B ETOX	2001	REC93315-628U9	REC93317-330U2 REC93341-930V2		REC93315-430U8	REC93315-425U7	REC93332-000U7	REC93315-430V5	REC93306-208U0
140A	1984-87	REC93315-628U9	REC93317-330U2 REC93341-930V2		REC93315-430U8	REC93315-425U7	REC93332-000U7		REC93306-208U0
140B	1988-89	REC93315-628U9	REC93317-330U2 REC93341-930V2		REC93315-430U8	REC93315-425U7	REC93332-000U7		REC93306-208U0
L140B	1989	REC93315-628U9	REC93317-330U2 REC93341-930V2		REC93315-430U8	REC93315-425U7	REC93332-000U7	REC93315-430V5	REC93306-208U0
150A	1984-89	REC93311-928U5	REC93317-330U2 REC93341-930V2		REC93315-430U8	REC93315-425V3	REC93332-000V3 STD. ROT REC93390-000U2 C.ROT.	REC93315-430V5	REC93306-209U0 STD. ROT REC93332-00048 C.ROT.
150A ET	1998-00	REC93311-928U5	REC93317-330U2 REC93341-930V2		REC93315-430U8	REC93315-425V3	REC93332-000V3		REC93306-209U0
150A ETO	1986-87				REC93315-430U8		REC93390-000U2		REC93390-000U2
150A ETL	2001-02	REC93311-928U5	REC93317-330U2 REC93341-930V2		REC93315-430U8	REC93315-425V3	REC93332-000V3		REC93306-209U0
150A ETX	2001-02	REC93311-928U5	REC93317-330U2 REC93341-930V2		REC93315-430U8	REC93315-425V3	REC93332-000V3		REC93306-209U0
150C	1990-94	REC93311-928U5	REC93317-330U2 REC93341-930V2		REC93315-430U8	REC93315-425V3	REC93332-000V3		REC93306-209U0
150F	1996-98	REC93311-928U5	REC93315-430V5 REC93341-930V2		REC93315-430U8	REC93315-425V3	REC93390-000U2		REC93332-00048
150F	1997-98	REC93311-928U5	REC93315-430V5 REC93341-930V2		REC93315-430U8	REC93315-425V3	REC93332-000V3 STD. ROT REC93390-000U2 C.ROT		REC93306-209U0 STD. ROT REC93332-00048 C.ROT.

		1	2	3	4	5	6	7	8
150F ETO	2000	REC93311-928U5	REC93317-330U2 REC93341-930V2		REC93315-430U8	REC93315-425V3	REC93332-000V3 STD. ROT REC93390-000U2 C.ROT.		REC93306-209U0 STD. ROT REC93332-00048 C.ROT.
150F ETOL	2001-06	REC93311-928U5	REC93317-330U2 REC93341-930V2		REC93315-43061	REC93315-425V3	REC93332-000V3 STD. ROT REC93390-000U2 C.ROT.		REC93306-209U0 STD. ROT REC93332-00048 C.ROT.
150F ETOX	2001-06	REC93311-928U5	REC93317-330U2 REC93341-930V2		REC93315-43061	REC93315-425V3	REC93332-000V3 STD. ROT REC93390-000U2 C.ROT.		REC93306-209U0 STD. ROT REC93332-00048 C.ROT.
D150H	1999	REC93315-628U9	REC93317-330U2 REC93341-930V2		REC93315-43061		REC93332-00048		REC93332-00048
D150H ETOL	2001-02	REC93315-628U9	REC93317-330U2 REC93341-930V2		REC93315-43061		REC93332-00048		REC93332-00048
F150A ETL F150A ETX FL150A ETL FL150AETX	2004-06	REC93311-928U5	REC93317-330U2 REC93341-930V2		REC93315-43061	REC93315-425V3	REC93332-000V3 STD. ROT REC93390-000U2 C.ROT.		REC93306-209U0 STD. ROT REC93332-00048 C.ROT.
L150A	1988-89	REC93311-928U5	REC93317-330U2 REC93341-930V2		REC93315-430U8		REC93390-000U2	REC93315-430V5	REC93390-000U2
L150C	1990-94	REC93311-928U5	REC93317-330U2 REC93341-930V2		REC93315-430U8	REC93315-425V3	REC93390-000U2	REC93315-430V5	REC93306-209U0
L150C	1995		REC93315-430V5				REC93390-000U2		REC93332-00048
L150F	1996-98	REC93311-928U5	REC93315-430V5 REC93341-930V2		REC93315-430U8	REC93315-425V3	REC93332-000V3 STD. ROT REC93390-000U2 C.ROT.		REC93306-209U0 STD. ROT REC93332-00048 C.ROT.
L150F ETO	2000-01	REC93311-928U5	REC93317-330U2 REC93341-930V2		REC93315-430U8	REC93315-425V3	REC93332-000V3 STD. ROT REC93390-000U2 C.ROT		REC93306-209U0 STD. ROT REC93332-00048 C.ROT.
L150F ETOL L150F ETOX	2001	REC93311-928U5	REC93317-330U2 REC93341-930V2		REC93315-430U8	REC93315-425V3	REC93332-000V3 STD. ROT REC93390-000U2 C.ROT		REC93306-209U0 STD. ROT REC93332-00048 C.ROT.
LZ150P	2000-02				REC93315-430U8		REC93390-000U2		REC93390-000U2
LZ150P ETOX	2000-06	REC93311-928U5	REC93317-330U2 REC93341-930V2		REC93315-43061	REC93315-425V3	REC93332-000V3 STD. ROT REC93390-000U2 C.ROT.		REC93306-209U0 STD. ROT REC93332-00048 C.ROT.
LZ150T XRC	2004						REC93390-000U2		REC93390-000U2
Z150P ETO	2000	REC93311-928U5	REC93317-330U2 REC93341-930V2		REC93315-430U8	REC93315-425V3	REC93332-000V3 STD. ROT REC93390-000U2 C.ROT.		REC93306-209U0 STD. ROT REC93332-00048 C.ROT.
Z150P ETOL Z150P ETOX	2001-06	REC93311-928U5	REC93317-330U2 REC93341-930V2		REC93315-43061	REC93315-425V3	REC93332-000V3 STD. ROT REC93390-000U2 C.ROT.		REC93306-209U0 STD. ROT REC93332-00048 C.ROT.
Z150Q ETO	2000	REC93311-928U5	REC93317-330U2 REC93341-930V2		REC93315-430U8	REC93315-425V3	REC93332-000V3		REC93306-209U0
Z150Q ETOL	2001-06	REC93311-928U5	REC93317-330U2 REC93341-930V2		REC93315-43061	REC93315-425V3	REC93332-000V3		REC93306-209U0
175A	1984-89	REC93311-928U5	REC93317-330U2 REC93341-930V2		REC93315-430U8	REC93315-425V3	REC93332-000V3 STD. ROT REC93390-000U2 C.ROT.	REC93315-430V5	REC93306-209U0 STD. ROT REC93332-00048 C.ROT
175A ETO	1986-87	REC93311-928U5	REC93317-330U2		REC93315-430U8	REC93315-425V3	REC93390-000U2		REC93390-000U2
175B	1990-94	REC93311-928U5	REC93317-330U2 REC93341-930V2		REC93315-430U8	REC93315-425V3	REC93332-000V3		REC93306-209U0
175B	1995	REC93311-928U5	REC93315-430V5		REC93315-430U8	REC93315-425V3	REC93390-000U2		REC93332-00048
175D	1996-98	REC93311-928U5	REC93315-430V5 REC93341-930V2		REC93315-430U8	REC93315-425V3	REC93332-000V3 STD. ROT REC93390-000U2 C.ROT.		REC93306-209U0 STD. ROT REC93332-00048 C.ROT.
175D ETO	2000	REC93311-928U5	REC93317-330U2 REC93341-930V2		REC93315-430U8	REC93315-425V3	REC93332-000V3 STD. ROT REC93390-000U2 C.ROT.		REC93306-209U0 STD. ROT REC93332-00048 C.ROT.
175D ETOL	2001-03	REC93311-928U5	REC93317-330U2 REC93341-930V2		REC93315-430U8	REC93315-425V3	REC93332-000V3 STD. ROT REC93390-000U2 C.ROT.		REC93306-209U0 STD. ROT REC93332-00048 C.ROT.
175D ETOX	2001-02	REC93311-928U5	REC93317-330U2 REC93341-930V2		REC93315-430U8	REC93315-425V3	REC93332-000V3 STD. ROT REC93390-000U2 C.ROT.		REC93306-209U0 STD. ROT REC93332-00048 C.ROT.
Z175G ETOX	2001-06	REC93311-928U5	REC93317-330U2 REC93341-930V2		REC93315-43061	REC93315-425V3	REC93332-000V3 STD. ROT REC93390-000U2 C.ROT.		REC93306-209U0 STD. ROT REC93332-00048 C.ROT.
Z175H ETOL	2001	REC93311-928U5	REC93317-330U2 REC93341-930V2		REC93315-430U8	REC93315-425V3	REC93332-000V3		REC93306-209U0
200A	1984-89	REC93311-928U5	REC93317-330U2 REC93341-930V2		REC93315-430U8	REC93315-425V3	REC93332-000V3 STD. ROT REC93390-000U2 C.ROT	REC93315-430V5	REC93306-209U0 STD. ROT REC93332-00048 C.ROT.
200A ETO	1986-87	REC93311-928U5	REC93317-330U2		REC93315-430U8		REC93390-000U2		REC93390-000U2

		1	2	3	4	5	6	7	8
200B	1990-94	REC93311-928U5	REC93317-330U2 REC93341-930V2		REC93315-430U8	REC93315-425V3	REC93332-000V3		REC93306-209U0
200B	1995	REC93311-928U5	REC93315-430V5		REC93315-430U8	REC93315-425V3	REC93390-000U2		REC93332-00048
200F	1996-98	REC93311-928U5	REC93315-430V5 REC93341-930V2		REC93315-430U8	REC93315-425V3	REC93332-000V3 STD. ROT REC93390-000U2 C.ROT.		REC93306-209U0 STD. ROT REC93332-00048 C.ROT.
200F ETO	2000	REC93311-928U5	REC93317-330U2 REC93341-930V2		REC93315-430U8	REC93315-425V3	REC93332-000V3 STD. ROT REC93390-000U2 C.ROT.		REC93306-209U0 STD. ROT REC93332-00048 C.ROT
200F ETOL 200F ETOX	2001-06	REC93311-928U5	REC93317-330U2 REC93341-930V2		REC93315-43061	REC93315-425V3	REC93332-000V3 STD. ROT REC93390-000U2 C.ROT.		REC93306-209U0 STD. ROT REC93332-00048 C.ROT.
200G	1999	REC93311-928U5	REC93317-330U2 REC93341-930V2		REC93315-430U8	REC93315-425V3	REC93332-000V3		REC93306-209U0
200G ETO	2000	REC93311-928U5	REC93317-330U2 REC93341-930V2		REC93315-430U8	REC93315-425V3	REC93332-000V3		REC93306-209U0
200G ETOL	2001-03	REC93311-928U5	REC93317-330U2 REC93341-930V2		REC93315-430U8	REC93315-425V3	REC93332-000V3		REC93306-209U0
F200A ETX	2002-06	REC93311-83280	REC93317-330U2		REC93315-43061		REC93332-000W1		REC93306-209U0 STD. ROT REC93332-00048 C.ROT.
F200C ETX	2006	REC93311-83280	REC93317-330U2				REC93332-000W1		REC93306-209U0 STD. ROT REC93332-00048 C.ROT.
FL200A ETX	2002-06	REC93311-83280	REC93317-330U2		REC93315-43061		REC93332-000W1		REC93306-209U0 STD. ROT REC93332-00048 C.ROT
FL200C ETX	2006	REC93311-83280	REC93317-330U2				REC93332-000W1		REC93306-209U0 STD. ROT REC93332-00048 C.ROT
L200A	1988-89	REC93311-928U5	REC93317-330U2 REC93341-930V2		REC93315-430U8	REC93315-425V3	REC93390-000U2	REC93315-430V5	REC93332-00048
L200B	1990-94	REC93311-928U5	REC93317-330U2 REC93341-930V2			REC93315-425V3	REC93332-000V3 STD. ROT REC93390-000U2 C.ROT	REC93315-430V5	REC93306-209U0
L200F	1996-98	REC93311-928U5	REC93315-430V5 REC93341-930V2		REC93315-430U8	REC93315-425V3	REC93332-000V3 STD. ROT REC93390-000U2 C.ROT.		REC93306-209U0 STD. ROT REC93332-00048 C.ROT
L200F ETO	2000	REC93311-928U5	REC93317-330U2 REC93341-930V2		REC93315-430U8	REC93315-425V3	REC93332-000V3 STD. ROT REC93390-000U2 C.ROT.		REC93306-209U0 STD. ROT REC93332-00048 C.ROT.
L200F ETOL	2001-06	REC93311-928U5	REC93317-330U2 REC93341-930V2		REC93315-43061	REC93315-425V3	REC93332-000V3 STD. ROT REC93390-000U2 C.ROT.		REC93306-209U0 STD. ROT REC93332-00048 C.ROT.
L200F ETOX	2001	REC93311-928U5	REC93317-330U2		REC93315-430U8	REC93315-425V3	REC93332-000V3 STD. ROT REC93390-000U2 C.ROT.		REC93306-209U0 STD. ROT REC93332-00048 C.ROT.
LZ200N	2000						REC93390-000U2		REC93390-000U2
LZ200N ETO	2000	REC93311-928U5	REC93317-330U2		REC93315-430U8	REC93315-425V3	REC93332-000V3		REC93306-209U0 STD. ROT REC93332-00048 C.ROT.
LZ200N ETOX	2001-07	REC93311-928U5	REC93317-330U2 REC93341-930V2		REC93315-43061	REC93315-425V3	REC93332-000V3 STD. ROT REC93390-000U2 C.ROT.		REC93306-209U0 STD. ROT REC93332-00048 C.ROT.
LZ200T R	2005						REC93390-000U2		REC93390-000U2
LZ200T XRC	2004-06						REC93390-000U2		REC93390-000U2
LZ200T XRD	2005						REC93390-000U2		REC93390-000U2
Z200N ETO	2000	REC93311-928U5	REC93317-330U2 REC93341-930V2		REC93315-430U8	REC93315-425V3	REC93332-000V3		REC93306-209U0 STD. ROT REC93332-00048 C.ROT.
Z200N ETOL Z200N ETOX	2001-06	REC93311-928U5	REC93317-330U2 REC93341-930V2		REC93315-43061	REC93315-425V3	REC93332-000V3 STD. ROT REC93390-000U2 C.ROT.		REC93306-209U0 STD. ROT REC93332-00048 C.ROT.
Z200P ETOL	2003-06	REC93311-928U5	REC93317-330U2 REC93341-930V2		REC93315-43061	REC93315-425V3	REC93332-000V3		REC93306-209U0
220A	1984-86	REC93311-928U5	REC93317-330U2 REC93341-930V2		REC93315-430U8	REC93315-425V3	REC93332-000V3		REC93306-209U0
225A	1987-89	REC93311-928U5	REC93317-330U2 REC93341-930V2		REC93315-430U8	REC93315-425V3			REC93306-209U0
225B	1990-94	REC93311-928U5	REC93317-330U2 REC93341-930V2		REC93315-430U8	REC93315-425V3	REC93332-000V3		REC93306-209U0
225B	1995	REC93311-928U5	REC93315-430V5			REC93315-425V3	REC93332-000V3		REC93306-209U0
225C	1994	REC93311-83280	REC93317-330U2		REC93315-430U8		REC93332-000W1		REC93306-210U0

		1	2	3	4	5	6	7	8
225C	1995	REC93311-83280	REC93315-430V5						
225D	1996-98	REC93311-928U5	REC93315-430V5 REC93341-930V2		REC93315-430U8	REC93315-425V3	REC93332-000V3		REC93306-209U0
225D ETO	2000	REC93311-928U5	REC93317-330U2 REC93341-930V2		REC93315-430U8	REC93315-425V3	REC93332-000V3		REC93306-209U0
225D ETOL 225D ETOX	2001-03	REC93311-928U5	REC93317-330U2 REC93341-930V2		REC93315-430U8	REC93315-425V3	REC93332-000V3		REC93306-209U0
225G	1999	REC93311-83280	REC93317-330U2		REC93315-43061		REC93332-000W1		REC93306-210U0
225G ETO	2000	REC93311-83280	REC93317-330U2		REC93315-43061		REC93332-000W1		REC93306-210U0
225G ETOL	2001-03	REC93311-928U5	REC93317-330U2		REC93315-43061		REC93332-000W1		REC93306-210U0
F225A ETU	2003-06		REC93317-330U2		REC93315-43061		REC93332-000W1		REC93306-209U0 STD. ROT REC93332-00048 C.ROT.
F225A ETX FL225A ETX	2002-06	REC93311-83280	REC93317-330U2		REC93315-43061		REC93332-000W1		REC93306-209U0 STD. ROT REC93332-00048 C.ROT.
L225C	1994	REC93311-83280	REC93317-330U2		REC93315-430U8		REC93332-000W1		REC93306-210U0
L225C	1995	REC93311-83280	REC93315-430V5				REC93332-000W1		REC93306-210U0
250A	1990-94	REC93311-83280	REC93317-330U2		REC93315-430U8		REC93332-000W1		REC93306-210U0
250A	1995-98	REC93311-83280	REC93315-430V5				REC93332-000W1		REC93306-210U0
250A ETO	2000	REC93311-83280	REC93317-330U2		REC93315-430U8		REC93332-000W1		REC93306-210U0
250A ETOX	2001-06	REC93311-83280	REC93317-330U2		REC93315-43061		REC93332-000W1		REC93306-210U0
250B	1997-98	REC93311-83280	REC93317-330U2		REC93315-430U8		REC93332-000W1		REC93306-210U0
250B ETO	2000	REC93311-83280	REC93317-330U2		REC93315-430U8		REC93332-000W1		REC93306-210U0
250B ETOX	2001-03	REC93311-83280	REC93317-330U2		REC93315-430U8		REC93332-000W1		REC93306-210U0
250G ETOX	2006	REC93311-83280	REC93317-330U2		REC93315-43061		REC93332-000W1		REC93306-210U0
F250A ETU	2006	REC93311-83280	REC93317-330U2				REC93332-000W1		REC93306-210U0
F250A ETX FL250A ETU FL250 ETX	2006	REC93311-83280	REC93317-330U2				REC93332-000W1		REC93306-209U0 STD. ROT REC93332-00048 C.ROT.
L250A	1990-94	REC93311-83280	REC93317-330U2		REC93315-430U8		REC93332-000W1	REC93315-430U8	REC93315-430U8
L250A	1995-98	REC93311-83280	REC93315-430V5				REC93332-000W1		REC93306-210U0
L250A ETO	2000	REC93311-83280	REC93317-330U2		REC93315-430U8		REC93332-000W1		REC93306-210U0
L250A ETOX	2001-06	REC93311-83280	REC93317-330U2		REC93315-43061		REC93332-000W1		REC93306-210U0
L250B	1997-98	REC93311-83280	REC93317-330U2		REC93315-430U8		REC93332-000W1		REC93306-210U0
L250B ETO	2000	REC93311-83280	REC93317-330U2		REC93315-430U8		REC93332-000W1		REC93306-210U0
L250B ETOX	2001-03	REC93311-83280	REC93317-330U2		REC93315-430U8		REC93332-000W1		REC93306-210U0
L250G ETOX	2006	REC93311-83280	REC93317-330U2		REC93315-43061		REC93332-000W1		REC93306-210U0
LZ250D EOX	2003-06	REC93311-83280	REC93317-330U2		REC93315-43061		REC93332-000W1		REC93306-209U0 STD. ROT REC93332-00048 C.ROT.
Z250D ETOU	2003	REC93311-83280	REC93317-330U2		REC93315-43061		REC93332-000W1		REC93306-209U0 STD. ROT REC93332-00048 C.ROT.
Z250D ETOX Z250F ETOL	2003-06	REC93311-83280	REC93317-330U2		REC93315-43061		REC93332-000W1		REC93306-209U0 STD. ROT REC93332-00048 C.ROT.
LZ300A ETOX Z300A ETOU Z300A ETOX	2004-06	REC93311-83280	REC93317-330U2				REC93332-000W1		REC93306-209U0 STD. ROT REC93332-00048 C.ROT.

SISTEMA DE PROPULSIÓN
PROPULSION SYSTEM
SISTEMA DI PROPULSIONE
SYSTEME DE PROPULSION

HÉLICES ALUMINIO E INOXIDABLE DE 3 Y 4 PALAS | 3 & 4 BLADE ALUMINIUM & SS PROPELLERS | ELICHE ALLUMINIO E INOX DA 3 E 4 PALE | HELICE ALUMINIUM ET INOX 3 ET 4 PALES

CÓDIGO DE REFERENCIAS | PART NO. CODING SYSTEM | SISTEMA DI CODICE | CODAGE DES REFERENCES

SOLAS

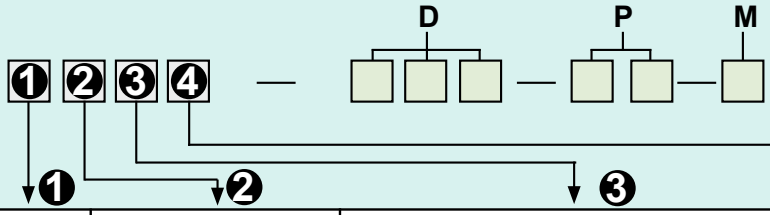

1	2	3	4
1. Mercury, Mariner **2.** Johnson, Evinrude **3.** Yamaha **4.** Suzuki **5.** Tohatsu **6.** **7.** **8.** Volvo Penta **9.** Rubex System	0.5,6,8 and 9.8 HP Group **1.** A Group **2.** B Group **3.** C Group **4.** D Group **5.** E Group **6.** F Group **7.** VP (Std. Hub) **8.** VP (Long Hub)	**1.** AL **2. Saturn** (Acero inox. | Stainless Steel | Acciaio inox. | Acier inox.) **3. New Saturn** (Acero inox. | Stainless Steel | Acciaio inox. | Acier inox.) **4. Titan** (Acero inox. | Stainless Steel | Acciaio inox. | Acier inox.) **5. HR Titan** (Acero inox. | Stainless Steel | Acciaio inox. | Acier inox.)	**1.** 3R Rubber Hub **2.** 3L Rubber Hub **3.** 4R Rubber Hub **4.** 4L Rubber Hub

Ejemplo | Note | Esempio | Exemple

D (Ø) — i.e. 13 1/4 ➔133, 13.75 ➔138

P (Pitch) — i.e. 17" ➔17, 13" ➔13

M — P Pin Drive Propeller
1, 2, 5 Different Propeller Hub Fitting Spec.

AMITA 3

Hélice de aluminio de 3 palas con núcleo de goma de gran resistencia.

3 blade aluminum propeller with heavy duty rubber hub.

Eliche di alluminio a 3 pale con mozzi in gomma ad alta resistenza.

Hélice en aluminium 3 pales avec moyeu en caoutchouc



LEXOR

SOLAS

Hélices de acero inoxidable de 3 palas.
Gran diámetro del área de las palas para barcos pesados.
Gran rendimiento en alta velocidad sin sacrificar las velocidades medias.
Excelente ahorro de combustible.

Three blade stainless steel propeller.
Large diameter and blade area for big boat loads.
Great high speed performance sithout sacrificing mid-range speeds.
Excellent fuel economy.

Eliche di acciaio inox a 3 pale.
Grande diametro delle pale per imbarcazioni pesanti.
Grandi prestazioni ad alta velocità senza sacrificare velocità medie.
Eccellente risparmio di carburante.

Hélice inox 3 Pales,grand diamètre pour bateaux lourds.Excellentes performances à grande vitesse sans sacrifier les vitesses moyennes.
Excellente économie de carburant.



AMITA 4

SOLAS

Hélices de aluminio de 4 palas con núcleo de goma de gran resistencia.
Van muy suaves a poca velocidad y hace el barco muy manejable con la mar picada.

4 Blade aluminum propeller with heavy duty rubber hub.
Smoother low speed makes the offshore boating activity much easier.

Eliche di alluminio a 4 pale con mozzo in gomma ad alta resistenza.
Molto morbido a bassa velocità e rende la barca molto maneggevole con mare cattivo.

Hélice en aluminium 4 pales avec moyeu en caoutchouc..Permet d'aller doucement à basse vitesse et rende le bateau très maniable lorsque la mer est agitée



NEW SATURN

SOLAS

Hélices de acero inoxidable de 3 palas.
Ofrece buena aceleración y rendimiento.
Tamaño más pequeño que ofrece un diámetro extragrande.

Three blade stainless steel propeller.
Offers good acceleration & all-round performance.
Smaller pitch sizes offered in extra large diameter with increased blade area.

Eliche di acciaio inox a 3 pale.
Buona accelerazione.
Piccole dimensione che offre un più grande diametro.

Hélice inox 3 pales, offrant de bonnes accélérations et performances. Taille de pas reduite pour les modèles de grands diamètres avec une surface de pale plus importante.



YAMAHA

RECAMBIOS MARINOS

GUÍA DE HÉLICES CON NÚCLEO INTEGRADO — PROPELLERS APPLICATION WITH RUBBER HUB — GUIDA ELICHE CON MOZZO — GUIDE DES HELICES ET MOYEUX

	2T STROKES	4T STROKES	R.O. OEM	A	G	B	D	P	R	AL		INOX STAINLESS STEEL	
2.5 - 6 HP	✓	✓	6L5-45949-00-EL	9		3	7 1/4	5	R	SOL3011-073-05S	AMITA 3		
			6E0-45943-01-EL				7 1/2	7	R	SOL3011-075-07S	AMITA 3		
			6L5-45943-00-EL				7 1/4	6	R	PAF2.6-03010000			
			6E0-45943-01-EL				7 1/2	7	R	PAF4-03070000			
6.8 HP F6, F8, F9.9	✓	✓	6G1-45947-00-EL	7		3	8 1/2	7	R	SOL3011-085-07	AMITA 3		
			6G1-45943-00-EL				8 1/2	8	R	SOL3011-085-08	AMITA 3		
			6G1-45941-00-EL				8 1/2	9	R	SOL3011-085-09	AMITA 3		
8 HP (1976-83)	✓			PIN		3	8 1/4	8	R	SOL2011-083-08P	AMITA 3		
			647-45943-00-EL				9	7	R	SOL3011-090-07-P	AMITA 3		
9.9 15 T8 T9.9 F9.9 (2000-07) F15 F20 Hight Thrust	✓	✓		8	2 1/2	3		7	R	SOL3111-093-07	AMITA 3		
			683-45947-00-EL				9 1/4	8	R	SOL3111-093-08	AMITA 3		
			683-45945-00-EL				9 1/4	9		SOL3111-093-09	AMITA 3		
			683-45942-00-EL				9 1/4	10	R	SOL3111-093-10	AMITA 3		
			683-45943-00-EL				9 1/4	11	R	SOL3111-093-11	AMITA 3		
			63V-45943-10-00				9 1/4	11	R	PAF15-06090000			
			683-45941-00-00				9 1/4	12	R	SOL3111-093-12	AMITA 3		
20 (1996-97) 25 (1980 +) 30 (1979 +) F25	✓	✓	664-45941-01-EL	10	3	3	9 7/8	9	R	SOL3211-099-09			
			664-45945-00-EL				9 7/8	10	R	SOL3211-099-10			
			664-45947-01-EL				9 7/8	11	R	SOL3211-099-11			
			664-45954-00-EL				9 7/8	12	R	SOL3211-099-12			
			664-45949-02-EL				9 7/8	13	R	SOL3211-099-13			
							10 3/4	10	R			SOL3231-108-10	NEW SATURN
			664-45972-00-98				10 1/2	11	R			SOL3231-105-11	NEW SATURN
			664-45970-00-98				10 1/4	12	R			SOL3231-103-12	NEW SATURN
			MAR-6YT30-02-12				10 1/8	13	R			SOL3231-101-13	NEW SATURN
40 48 50 (NO T50) 55 60 (-1991) F30 F40 (1999+) F50 (1995+) F60 (1999+)			663-45956-01-EL	13	3 1/2	3	12 1/4	9	R	SOL3311-121-09	AMITA 3		
			663-45947-02-EL				11 5/8	11	R	SOL3311-116-11	AMITA 3		
			663-45952-02-EL				11 3/4	12	R	SOL3311-114-12	AMITA 3		
			663-45945-02-EL				11 1/8	13	R	SOL3311-111-13	AMITA 3		
			69W-45941-00-EL				11 1/8	13	R	PAT40-04070000			
			663-45958-01-EL				11 1/4	14	R	SOL3311-111-14	AMITA 3		
			663-45943-02-EL				11	15	R	SOL3311-110-15	AMITA 3		
			663-45949-01-EL				10 3/4	16	R	SOL3311-110-16	AMITA 3		
			663-45941-01-EL				11	17	R	SOL3311-110-17	AMITA 3		
							11 7/8	10	R			SOL3331-119-10	NEW SATURN
							11 5/8	11	R			SOL3331-116-11	NEW SATURN
							11 3/8	12	R			SOL3331-114-12	NEW SATURN
							11 1/8	13	R			SOL3331-111-13	NEW SATURN
							11 1/8	14	R			SOL3331-111-14	NEW SATURN
40 HP				PIN		3	11 1/2	10	R	SOL3311-115-10-P	AMITA 3		
							11 1/2	11	R	SOL3311-115-11-P	AMITA 3		
							11 1/2	12	R	SOL3311-115-12-P	AMITA 3		
60 (1992+) 70 (1984+) 75 (1994+) 80 (1978-89) 85 (1991-97) 90 (1984+) 115 (1984+) 130 (1984+) F75 (2003+) F80 (1999+) F90 (2003+) F100 (1999+) F115 (2000+) T50 (1996+) T60 (2003+) F70 (2010+)			6E5-45954-00-EL	15	4 1/4	3	14	11	R	SOL3411-140-11	AMITA 3		
			6E5-45949-00-EL				13 1/4	13	R	SOL3411-138-13 SOL3413-133-13	AMITA 3 AMITA 4		
							13 5/8	13	L	SOL3412-138-13			
			6E5-45947-00-EL				13 1/2	15	R	SOL3411-135-15 SOL3413-130-15	AMITA 3 AMITA 4		
							13 1/2	15	L	SOL3412-135-15			
			6E5-45945-00-EL				13 1/4	17	R	SOL3411-133-17 SOL3413-128-17	AMITA 3 AMITA 4		
							13 1/4	17	L	SOL3412-133-17			
			6E5-45941-00-EL				13	19	R	SOL3411-130-19 SOL3413-125-19	AMITA 3 AMITA 4		
			6E5-45943-00-EL				13	21	R	SOL3411-130-21 SOL3413-125-21	AMITA 3 AMITA 4		
			688-45978-60-98				13 1/2	15	R			SOL3431-135-15	NEW SATURN
			688-45930-02-98				13	17	R			SOL3431-133-17	NEW SATURN
							13	17	L			SOL3432-133-17	NEW SATURN
			688-45970-03-98				13	19	R			SOL3431-130-19	NEW SATURN
							13	19	L			SOL3432-130-19	NEW SATURN
			688-45972-02-98				13	21	R			SOL3431-130-21	NEW SATURN

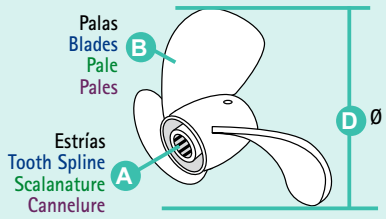

P Paso
Pitch
Passo
Pas

R Rotación L (izquierda) R (derecha)
Rotation L (left) R (Right)
Rotazione L (SX) R (DX)
Rotation L (gauche) R (droit)

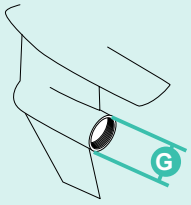

Ø Carcasa
Ø Gearcase
Ø Carter
Ø Carter

	2T STROKES	4T STROKES	R.O. OEM	A	G	B	D	P	R	AL		INOX STAINLESS STEEL	
			6G5-45941-00-98				15	15	R	SOL3511-150-15 SOL3513-148-15			
			6G5-45952-00-98				15	15	L	SOL3512-150-15 SOL3514-148-15	AMITA 3 AMITA 4		
			6G5-45947-01-98				14,8	17	R	SOL3511-148-17 SOL3513-145-17	AMITA 3 AMITA 4		
			6K1-45947-00-98				14,8	17	L	SOL3512-148-17 SOL3514-145-17	AMITA 3 AMITA 4		
			6G5-45945-01-98				14,5	19	R	SOL3511-145-19 SOL3513-143-19	AMITA 3 AMITA 4		
			6K1-45945-01-98				14,5	19	L	SOL3512-145-19 SOL3514-143-19	AMITA 3 AMITA 4		
			6G5-45949-00-98				14,3	21	R	SOL3511-143-21 SOL3513-140-21	AMITA 3 AMITA 4		
150 (1986+) 175 (1984+) 200 (1984+)							14,3	21	L	SOL3512-143-21 SOL3514-140-21	AMITA 3 AMITA 4		
200VMAX (2001+) 220 (1987-88) 225 (1986+)			6G5-45949-00-98				14,2	23	R	SOL3511-142-23	AMITA 3		
							14,2	23	L	SOL3512-142-23	AMITA 3		
250 (1990+)			6G5-45941-00-98				15 3/4	15	R			SOL3571-158-15	LEXOR
225VMAX (2001+)			6G5-45952-00-98				15 3/4	15	L			SOL3572-158-15	LEXOR
300 (2004+), F150 (2004+)			6G5-45947-01-98				15 1/2	17	R			SOL3571-155-17	LEXOR
F200 (2002+)			6K1-45947-00-98				15 1/2	17	L			SOL3572-155-17	LEXOR
F225 (2002+)			6G5-45945-01-98			3	15 1/4	19	R			SOL3571-153-19	LEXOR
F250 (2005+)			6K1-45945-01-98				15 1/4	19	L			SOL3572-153-19	LEXOR
F300 (2003+)			6G5-45949-00-98				15	21	R			SOL3571-150-21	LEXOR
dentro-fueraborda			-				15	21	R			SOL3572-150-21	LEXOR
Intro-outboard			6G5-45949-00-98				14	23	R			SOL3571-148-23	LEXOR
Intro-Fuoribordo			-				14	23	L			SOL3572-148-23	LEXOR
iede*****							14	25	R			SOL3571-145-25	LEXOR
3.0L-7.4L							14	27	R			SOL3571-145-27	LEXOR
			6G5-45970-02-98				15 1/4	15	R			SOL3531-145-15	NEW SATURN
			6K1-45970-01-98				15 1/4	15	L			SOL3532-145-15	NEW SATURN
			6G5-45978-03-98				13 3/4	17	R			SOL3531-143-17	NEW SATURN
			6K1-45978-02-98				13 3/4	17	L			SOL3532-143-17	NEW SATURN
			6G5-45974-03-98				13 3/4	19	R			SOL3531-140-19	NEW SATURN
			6K1-45974-02-98				13 3/4	19	L			SOL3532-140-19	NEW SATURN
			6G5-45972-02-98				13 3/4	21	R			SOL3531-140-21	NEW SATURN
			6K1-45972-01-98				13 3/4	21	L			SOL3532-140-21	NEW SATURN
			6G5-45976-01-98				13 3/8	23	R			SOL3531-140-23	NEW SATURN
			6K1-45976-00-98				13 3/8	23	L			SOL3532-140-23	NEW SATURN

HÉLICES PARA NÚCLEO INTERCAMBIABLE — PROPELLERS FOR INTERCHANGEABLE HUB — ELICHE PER MOZZO INTERCAMBIABILE — HELICES AVEC MOYEU INTERCHANGEABLE

	B	D	P	R	AL
C 30-75 HP	3	12.1	9	R	SOL9311-121-09
		12	10	R	SOL9311-120-10
		11-6	11	R	SOL9311-116-11
		11.4	12	R	SOL9311-114-12
		11.1	13	R	SOL9311-111-13
		11.1	14	R	SOL9311-111-14
		11	15	R	SOL9311-110-15
D 40-140 HP	3	14	9	R	SOL9411-140-09
		14	11	R	SOL9411-140-11
		13.75	13	R	SOL9411-138-13
		13.50	15	R	SOL9411-135-15
		13.25	17	R	SOL9411-133-17
		13.2	19	R	SOL9411-132-19
		13.2	21	R	SOL9411-132-21
E 135-350 HP	3	15.5	11	R	SOL9511-155-11
		15.3	13	R	SOL9511-153-13
		16	13	R	SOL9511-160-13
		15	15	R	SOL9511-150-15
		15	15	L	SOL9511-150-15
		14.8	17	R	SOL9511-148-17
		14.8	17	L	SOL9511-148-17
		14.5	19	R	SOL9511-145-19
		14.5	19	L	SOL9511-145-19
		14.3	21	R	SOL9511-143-21
		14.3	21	L	SOL9511-143-21

RUBEX



Núcleo intercambiable (no incluido).
Interchangeable hub (not included).
Mozzo intercambiabile (non incluso).
Moyaux interchangeable (non inclus)

	B	D	P	R	INOX STAINLESS STEEL
C 30-75 HP	3	11 5/8	11	R	SOL9331-116-11
		11 3/8	12	R	SOL9331-114-12
		11 1/8	13	R	SOL9331-111-13
		11 1/8	14	R	SOL9331-111-14
		11	15	R	SOL9331-110-15
D 40-140 HP	3	13 3/4	13	R	SOL9431-138-13
		13 3/4	13	L	SOL9432-138-13
		13 1/2	15	R	SOL9431-135-15
		13 1/2	15	L	SOL9432-135-15
		13 1/4	17	R	SOL9431-133-17
		13 1/4	17	L	SOL9432-133-17
		13	19	R	SOL9431-130-19
		13	19	L	SOL9432-130-19
		13	21	R	SOL9431-130-21
E 90-140 HP	3	14 1/2	15	R	SOL9531-145-15
		14 1/2	15	L	SOL9532-145-15
		14 1/4	17	R	SOL9531-143-17
		14 1/4	17	L	SOL9532-143-17
		14	19	R	SOL9531-140-19
		14	19	L	SOL9532-140-19
		14	21	R	SOL9531-140-21
		14	21	L	SOL9532-140-21
		14	23	R	SOL9531-140-23
		14	23	L	SOL9532-140-23
E 135-350 HP	3	15 3/4	15	R	SOL9571-158-15
		15 3/4	15	L	SOL9572-158-15
		15 1/2	17	R	SOL9571-155-17
		15 1/2	17	L	SOL9572-155-17
		15 1/4	19	R	SOL9571-153-19
		15 1/4	19	L	SOL9572-153-19
		15	21	R	SOL9571-150-21
		15	21	L	SOL9572-150-21
		14 3/4	23	R	SOL9571-148-23
		14 3/4	23	L	SOL9572-148-23
		14 1/2	25	R	SOL9571-145-25
		14 1/2	25	L	SOL9572-145-25



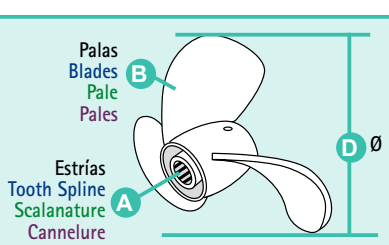

P Paso
Pitch
Passo
Pas

R Rotación L (izquierda) R (derecha)
Rotation L (left) R (Right)
Rotazione L (SX) R (DX)
Rotation L (gauche) R (droit)

NÚCLEO INTERCAMBIABLE INTERCHANGEABLE HUB MOZZO INTERCAMBIABILE MOYEU INTERCHANGEABLE

	2T STROKES	4T STROKES	A	REF	
F30 (2001-05) F40 (1999+); F50 (1995+) F60 (1999+)		✓	13	SOLRBX-117	C
40HP & 50HP (not T50), (1984+) 48HP (1995+) 55HP (1976-95) 60HP (1976-91)			13	SOLRBX-117	C
T50 (1996+)			15	SOLRBX-108	D
60-100 HP (1984+)	✓	✓	15	SOLRBX-108	D
80-140HP, (1978-83)			15	SOLRBX-102	D
115HP FS115		✓	15	SOLRBX-103	D
130HP, (1984+)			15	SOLRBX-103	D
150-175HP, (1978-83)			15	SOLRBX-102	E
150-300HP, (1984+)			15	SOLRBX-103	E
225 EFI		✓	15	SOLRBX-103	E
F300, F350			17	SOLRBX-127	E+
300, 350HP, V8		✓	17	SOLRBX-127	E+
Sterndrives, (1989-93)			15	SOLRBX-103	E



GUÍA DE RECAMBIOS DE HÉLICE PROPELLER SPARE PARTS GUIDA RICAMBIO ELICHE GUIDE DES PIECES POUR HELICE

	1	2	3	4	5
F2.5A, F4B, F5A, F6C	PAF4-03000025		PAF4-03000026	PAF4-03080000	PAGB/T91-1.6X12
F8C, F8F			REC90201-10M01	REC90171-10M01	REC91490-30025
F9.9J			REC90201-10M01	REC90171-10M01	REC91490-30025
F15C, F20B	REC6E7-45987-00		REC90201-10M01	REC90171-10M01	REC91490-30025
F25D	REC6L2-45987-00	REC689-45997-00	PAGB/T97.1-14	REC90171-14013-00	REC91490-30030
FT25F	REC663-45987-00		REC92990-16200	REC90171-16011	REC91490-30030
F30, F40F, F50H, F60F	REC663-45987-00	REC66T-45997-00	REC90389-22M01	REC90171-16011	REC91490-30030
FT50J, FT60G	REC688-45987-00	REC67F-45997-00	REC90389-25M00	REC90171-16011	REC91490-30030
F70A, F80B, F100D	REC688-45987-00	REC67F-45997-00	REC90389-25M00	REC90171-16011	REC91490-30030
F(L) 115A, F(L) 115B, F130A, F(L)150A, F(L)150D, F175A, F(L)200F	REC6E5-45987-00	REC688-45997-00	REC92990-18200	REC90171-18M04	REC91490-40030
F(L)225F, F(L)250D, F(L)300B (4.2L) V6		REC688-45997-00	REC92990-18200	REC90171-18M04	REC91490-40030

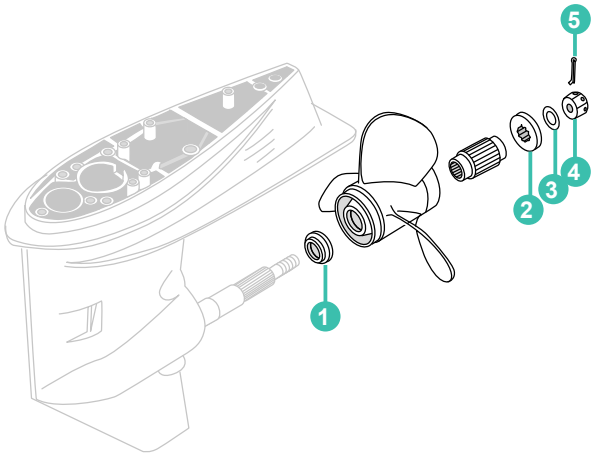

REF --> RO / OEM

REF	R.O. / OEM	
C		
CEF500302		143
CEF500316		143
CEF500320		143
CEF500321		143
CEF500322		143
CEF500323		143
CEF500324		143
CEF500325		143
CEF500326		143
CEF500352		143
CEF500363		143
CEF500364		143
CEF500368		143
CEF500371		143
CEF500384		143
CEF500385G		143
CEF500389N		143
CEF500389N		155
CEF500401N		143
CHAL77JC4		108
CHAL82C		108
CHAL90C		108
CHAQL77JC4		108
CHAQL78C		108
CHAQL82C		108
CHAQL86C		108
CHARA8HC		108
CHARC12YC		108
CHARC9YC4		108
CHAZ9Y		108
CM15008	66M-11325-00	159
CM15008A	66M-11325-00	159
CM15026	6E5-11325-00	158-169
CM15026A	6E5-11325-00	158-187-209-213
CM15026A		65-70-72-73-169
CM3082523	689-11325-00	158
CM41106-ZW000	41106-ZW-000	158
CM42121		159
CM43107M		169
CM61A-11325-00	61A-11325-00	161
CM61A-45371	61A-45371-00	160-169-383
CM61A-45371-00A	61A-45371-00	160-169-331-335-337
CM61N-45251-01	61N-45251-01	160-169-291-351-355
CM61N-45251-01A	61N-45251-01	160
CM61N-45251-01A		65-66-169
CM62Y-11325-00	62Y-11325-00	158
CM62Y-11325-00A	62Y-11325-00	158-197-203-205-207
CM62Y-11325-00A		65-66-67-68-69
CM63D-45251-01	63D-45251-01	159-169
CM63D-45251-01A		169
CM63P-11325-01	63P-11325-00	161
CM63P-11325-01	63P-11325-01	161
CM63P-11325-01		169
CM63P-11325-01A	63P-11325-00	161
CM63P-11325-01A	63P-11325-01	161-211-214
CM63P-11325-01A		70-71-73
CM63P-11325-11	63P-11325-11	161-169
CM63P-11325-11A	63P-11325-11	71-73-161-211
CM664-45371-01	664-45371-01	357-359-361
CM664-45371-01	664-45371-01-00	353
CM664-45371-01	664-45371-01A	160
CM664-45371-01		169
CM664-45371-01A	664-45371-01A	66-160-169
CM66M-11325-00A		65
CM66M-45371-00	66M-45371-00	159-169-291
CM679-45251-00	679-45251-00	160
CM679-45251-00A	679-45251-00	160
CM67C-45251-00	67C-45251-00	158-169-361
CM67C-45251-00A	67C-45251-00	66-67-69-158-299-303-307-311
CM67C-45371-00	67C-45371-00	160-169
CM67C-45371-00A	67C-45371-00	160-299-303-307-311
CM67C-45371-00A		66-67-68-69-169
CM67F-11325-00	67F-11325-00	159
CM67F-11325-01	67F-11325-01	161
CM67F-11325-01A	67F-11325-01	161-211-213
CM67F-11325-01A		70-71-72-73
CM67F-45371-00	67F-45371-00	161
CM67F-45371-00		70
CM67F-45371-00A	67F-45371-00	68-69-161-315-319
CM688-45251-01	688-45251-01	158-169
CM688-45251-01A	688-45251-01	67-68-69-158-169
CM688-45371-02	688-45371-02	371
CM688-45371-02		160-169
CM688-45371-02	688-45371-02-00	373
CM688-45371-02A		160-169
CM689-11325-00A	689-11325-00	158
CM68T-11325-00	68T-11325-00	161
CM68T-11325-00A	68T-11325-00	71-72-73-161-211
CM68T-45251-00	68T-45251-00	158-169
CM68T-45251-00A	68T-45251-00	64-65-158-169-289
CM68V-11325-01	68V-11325-01	158
CM68V-11325-01A	68V-11325-01	158
CM68V-11325-01A	68V-11325-02	209
CM68V-11325-01A		69
CM69L-45371-00	69L-45371-00	160-169
CM69L-45371-00A	69L-45371-00	160-169
CM6AW-45251-00	6AW-45251-00	161-169
CM6AW-45251-00A	6AW-45251-00	72-161-169
CM6AW-45373-00		161-169
CM6AW-45373-00A	6AW-45373-00	161-169 -341
CM6AW-45619-00		161
CM6AW-45619-00A	6AW-45619-00	161-341
CM6BL-11325-00	6BL-11325-00	161
CM6BL-11325-00A	6BL-11325-00	161-195
CM6BL-11325-00A		66
CM6E0-45251-11	677-45251-00	347
CM6E0-45251-11	6EO-45251-11-00	158
CM6E0-45251-11		169
CM6E0-45251-11A	6EO-45251-11-00	158
CM6E0-45251-11A		65-66-67-68-69-169
CM6E5-45251-00		158-169
CM6E5-45251-00A		66-158-169
CM6E5-45371-01A	6E5-45371-00	323
CM6E5-45371-01A	6E5-45371-01	161-379
CM6E5-45371-01A		70-71-169
CM6E5-45371-10	6E5-45371-10	160
CM6E8-45251-00	6E8-45251-00	159
CM6E8-45251-01	6E8-45251-02	159
CM6E8-45251-01		169
CM6G1-45251-02	6G1-45251-02	159-169
CM6G1-45251-03	6G1-45251-03	159
CM6G1-45251-03	6GH-45251-00	159
CM6G1-45251-03	6N0-WG525-00	159
CM6G1-45251-03		169
CM6G5-45251-01	6G5-45251-01	158-169
CM6G5-45251-01A	6G5-45251-01	70-158-169
CM6G8-11325-00	6G8-11325-00	159-169-181
CM6G8-11325-00A	6G8-11325-00	65-159-180-187-195-201-203-205
CM6G8-45251-01	6G8-45251-00	159-169
CM6H1-45251-01	6H1-45251-01	158-169
CM6H1-45251-01A	6H1-45251-01	158
CM6H1-45251-02	6H14525102	158-169
CM6H1-45251-02A	6H14525102	69-70-71-158-169
CM6H3-11325-01A	6H3-11325-01	241
CM6J9-45371-01	6J9-45371-01	160-169
CM6J9-45371-01A	6J9-45371-01	72-160-169-327
CM6K1-45371-00	6K1-45371-00	161-169
CM6K1-45371-00A	6K1-45371-00	161-169
CM6K1-45371-02	6J9-45371-02	160-169
CM6K1-45371-02A	6J9-45371-02	72-160-169
CM6L5-45251-02	6L5-45251-02	159-343
CM6L5-45251-02	6L5-45251-03	345
CM6L5-45251-02		169
CM6L5-45251-02A	68D-G5251-00	287
CM6L5-45251-02A	6L5-45251-02	159
CM6L5-45251-02A		64-169
CM6T4-45836-00	6T4-45836-00	159
CM6T5-45371-00	6T5-45371-00	161
CM6T5-45373-00	6T545373-00	159
CM6U0-45251-00	6UO-45251-00	159
CM6U0-45251-00		169
CM6U4-45251-00		158-169
CM825171		158
CM82795M		160
CM82795MA		160
CM85007	688-11325-00	160
CM85007A	688-11325-00	160
CMY150CRKITA		71-162
CMY150CRKITM		162
CMY150KITA		71-162
CMY150KITM		162
CMY200250KITA		72-73-162
CMY200250KITM		162
CMY200300KITM		162
CMY300350KITA		73-162
CMY300350KITM		162
CMY300350XPKITA		73-162
CMY300350XPKITM		162
CMY4050KITA		162
CMY4050KITM		162
CMY4060KITA		162
CMY4060KITM		162
CMY6090KITA		162
CMY6090KITM		162
CMY80100KITA		162
CMY80100KITM		162
CMYHP200300KITA		162
G		
GS11290		121
GS11291		121
GS11292		121
GS11294		121
GS30435		80
GS31001		80
GS31002		80
GS31020		77
GS31064		77
GS31065		79
GS31066		79
GS31067		79
GS31068		76
GS31069		76
GS31073		77
GS31074	6Y1-24305-05-00	76
GS31074	6Y1-24305-06	76
GS31074	6Y1-24305-06-00	76
GS31074	6YL-24305-01-00	76
GS31075	6G1-24305-00	76
GS31075	6G1-24305-01	76
GS31075	6G1-24305-02	76
GS31075	6G1-24305-02-00	76
GS31075	6G1-24305-03	76
GS31075	6G1-24305-03-00	76
GS31075	6G1-24305-04	76
GS31075	6G1-24305-04-00	76
GS31075	6G1-24305-05	76
GS31075	6G1-24305-05-00	76
GS31075	6G1-24305-0500	76
GS31075	6Y1-24305-00	76
GS31075	6Y1-24305-01	76
GS31075	6Y1-24305-02	76
GS31075	6Y1-24305-05-00	76
GS31075	6Y1-24305-06-00	76
GS31075	6YL-24305-01-00	76
GS31076	6E5-24305-05-00	76
GS31076	6E5-24305-06	76
GS31076	6E5-24305-06-00	76
GS31076	6Y2-24305-05-00	76
GS31076	6Y2-24305-06-00	76
GS31076	6YK-24305-01-00	76
GS31090		74
GS31092		77
GS31095		74
GS31096		74
GS31097		74
GS31099		74
GS31155		79
GS31156		79
GS31157		79
GS31166		79
GS31183	6Y1-24360-52-00	74
GS31183	6Y1-24360-52-01	74
GS31183	6Y1-24360-52-02	74
GS31183	6Y1-24360-52-51	74
GS31183	6Y1-24360-52-52	74
GS31187		74
GS35031		75
GS35032		75
GS40015	YMD-RCBOX-00-10	126
GS41084	6E5-61301-00	130
GS41084	6E5-61301-01	130

REF	R.O. / OEM	
N		
NGKB7HS	94702-00040	220-235-239
NGKB7HS-10	94702-00217	225-229
NGKB7HS-10	94702-00271	227
NGKB8HS	94702-00041	239
NGKB8HS-10	90472-00247	243
NGKB8HS-10	94702-00160	239
NGKBKR6EKU	94702-00405-00	108
NGKBKR7EKU	94702-00404-00	108
NGKBPR7HS	94702-00248	175
NGKBR5HS	94702-00249-00	108
NGKBR6FS	94701-00365-00	108
NGKBR6HS	94701-00248-00	108
NGKBR6HS	94702-00248	173
NGKBR6HS		64
NGKBR6HS-10	94702-00274	180-223
NGKBR6HS-10	94702-00274-00	108
NGKBR6HS-10		64-65
NGKBR7HS	94701-00110	108
NGKBR7HS	94701-00110-00	108
NGKBR7HS	94702-00272	221
NGKBR7HS	B7H-S0000-00-00	233
NGKBR7HS-10	94702-00271	223-229-231-237
NGKBR7HS-10	94702-00271-00	108
NGKBR8ES	94701-00204	108
NGKBR8ES-11	94702-00396	108
NGKBR8HS	94701-00195	108
NGKBR8HS	94701-00195-00	108
NGKBR8HS-10	94702-00247	237-241-245
NGKBR8HS-10	94702-00247-00	108
NGKBR8HS-10	94702-00271	247
NGKBR9HS-10	94701-00309-00	108
NGKBR9HS-10	94702-00309	245
NGKCR5HSB	94701-00300-00	108
NGKCR6HS	94701-00282	181
NGKCR6HS	94701-00282-00	108
NGKCR6HS	94702-00372-00	108
NGKCR6HSB	94702-00372	64-173-179
NGKCR9EB	94702-00409	108
NGKDPR5EA-9	94701-00406-00	69-108
NGKDPR6EA-9	94701-00375	197-207
NGKDPR6EA-9	94701-00375-00	108
NGKDPR6EA-9		65-66-67-68
NGKDPR6EB-9	94702-00418	187-195-201-203
NGKDPR6EB-9	94702-00418-00	108
NGKDPR6EB-9		65-66-67-68-69
NGKDPR7EA-9	94701-00375	185-191
NGKLFR5A-11	94702-00391	209-211
NGKLFR5A-11	94702-00391-00	108
NGKLFR5A-11		69-70-71-72
NGKLFR6A-11	94702-00400	213-214
NGKLFR6A-11	94702-00400-00	108
NGKLFR6A-11		70-72-73
NGKLKR6E	94702-00437-00	71-108
NGKLKR6E-9N		70
NGKLKR7E	94702-00429	205
NGKLKR7E	94702-00429-00	108
NGKLKR7E		69
P		
PA60-04000004	63D-44144-00	305-309-313
PA166F-000001	JA9-12153-00	173-175-179
PA166F-010001	67D-12111-00	173-180
PA166F-010002	67D-12121-00	173
PA166F-010003	51Y-12119-00	173-180-189-195-201
PA166F-010008	67D-12157-00	173-175-179
PA166F-010009	67D-12151-00	173-175-179
PA166F-010010	7FK-12165-00	173-175-179
PA166F-010011	7FK-12158-00	173-175-179
PAE4-10040100W	703-82563-00	122-127
PAE4-10040100W	703-82563-01	122-127
PAE4-10040100W	703-82563-02	127
PAF15-00000001	63V-45551-00-4D	132
PAF15-00000001	66M-44551-00-4D	132
PAF15-00000002	682-44555-30	135
PAF15-00000003	66M-44557-00	135
PAF15-00000005	66M-45113-00	271
PAF15-00000013	93604-10M03	201-317-351
PAF15-00000013	93604-12M07	171-173-283-289-291-293-351
PAF15-00000014	66M-11351-10	183-217
PAF15-00000014	93608-12063	233
PAF15-00000014		218

REF	R.O. / OEM	
PAF15-01000001	65F-42537-00	133
PAF15-01000004	90386-30048	133
PAF15-01000006	90386-30M60	133
PAF15-01010001	63V-43131-00	131
PAF15-01010001	63V-43131-01	131
PAF15-01010001	63V-43131-10	131
PAF15-01010007	63V-43145-00	131
PAF15-01010007	90185-22043	131
PAF15-01010007	90185-22M11	131
PAF15-01010100	63V-43111-00-4D	131
PAF15-01010100	63V-43111-01-4D	131
PAF15-01010100	63V-43111-A2-4D	131
PAF15-01010200	63V-43112-00-4D	131
PAF15-01010200	63V-43112-01-4D	131
PAF15-01010200	63V-W4311-00-4D	131
PAF15-01010200	63V-W4311-03-4D	131
PAF15-01010200	63V-WS431-B6-8D	131
PAF15-01010301S	63V-43311-00-4D	131
PAF15-01010301S	63V-43311-01-4D	131
PAF15-01010301S	99999-03116	131
PAF15-01010302	90386-22M15	133
PAF15-01030100	65W-42138-00	130
PAF15-02000005L	66M-44361-10	291
PAF15-02000005S	66M-44361-00	291
PAF15-02000006	63V-44365-10	289-291-351
PAF15-02010000	66M-44514-00-4D	135
PAF15-03000003	66M-45115-00	268
PAF15-04000002	90340-14M00	237-241
PAF15-04000002	90340-14M06	191-195-197-201-203-205-207-209-211-213
PAF15-04000003	90430-14115	195-197-201-207-209-211-213-235-237-239-241
PAF15-04000003	90430-14M09	191
PAF15-04000003		65-66-67-68-69-70-71-72-73
PAF15-04000005	676-11372-00	173-179-181-183-195-213-225-227-229-231-233
PAF15-04000005	6H1-11372-00	187
PAF15-04010004	66M-41138-00	268
PAF15-05000009	6BL-44391-00	139
PAF15-05000009	6H3-44391-00	139
PAF15-05000009	6H3-44391-01	139
PAF15-05000011	688-24378-00	183-191-195-197-207
PAF15-05000012	90445-09061	183
PAF15-05000013	90445-09086	183
PAF15-05000014	90445-09104	183-197-207
PAF15-05170300W	6G1-81941-10	111-114
PAF15-06000001	63V-45311-01-4D	351
PAF15-06000002	63V-45215-00	293-350
PAF15-06000002	6G1-45215-00	289
PAF15-06000003	6G1-45214-00	289-293-350
PAF15-06000004	61N-45251-00	295
PAF15-06000006	63V-45536-00	291-292-351
PAF15-06000008	6E8-45587-10	293
PAF15-06000008	6E8-45587-10-13	291-351
PAF15-06000009	6E7-45587-01-30	348
PAF15-06000009	6E8-45587-30	293
PAF15-06000010-1	664-45567-01-10	291-351
PAF15-06000010-1	664-45567-05	349
PAF15-06000010-1	664-45567-01	293
PAF15-06000010-2	664-45567-10	293
PAF15-06000010-2	664-45567-12	349
PAF15-06000010-3	664-45567-20	293
PAF15-06000010-4	664-45567-30	293
PAF15-06000010-5	664-45567-30	349
PAF15-06000010-5	664-45567-40	293
PAF15-06000010-6	664-45567-50	293
PAF15-06000010-7	664-4556-50	349
PAF15-06000010-7	664-45567-60	293
PAF15-06000014	63V-44328-00	289-291-351
PAF15-06000014	63V-44328-01	293
PAF15-06000015	6E7-45987-01	351
PAF15-06000016	90171-10M01	349
PAF15-06000020-1	90201-15017	293
PAF15-06020005	63V-45375-00	289-291-292-351
PAF15-06030000L	63V-44150-10	291-351
PAF15-06030000S	63V-44150-00	291-351
PAF15-06040000S	63V-45510-00	291
PAF15-06070002	90501-14M06	291-349-351
PAF15-06070002	90501-150A0	293
PAF15-06080000		293

REF	R.O. / OEM	
PAF15-06080003	93210-56M80	231-291-293-351
PAF15-06080006-1	626-45577-00	293-351
PAF15-06080006-1	626-45577-00-01	291-349
PAF15-06080006-2	626-45577-10	293
PAF15-06080006-3	626-45577-00-03	349
PAF15-06080006-3	626-45577-20	293
PAF15-06080006-4	626-45577-30	293
PAF15-06080006-5	626-45577-00-05	349
PAF15-06080006-5	626-45577-40	293
PAF15-06090000	63V-45943-10-00	402
PAF15-06100000L	66M-45300-11-4D	277-291
PAF15-06100000S	66M-45300-02-4D	277-291
PAF15-07000000	66M-W009B-15-1S	185
PAF15-07000001	99510-10114	180-183-185
PAF15-07000001	91810-03014	181
PAF15-07000013	93604-12M07	183
PAF15-07000016	661-41262-01	100
PAF15-07000016	661-41262-02	100
PAF15-07000024	66M-46297-00	185
PAF15-07000028	90105-08M78	180-185
PAF15-07000030	97013-06035	197
PAF15-07000031	66M-12411-00	137
PAF15-07000031	66M-12411-01	137-179-180-183
PAF15-07000031	6G8-12411-02	191
PAF15-07000031	6G8-12411-03	195-197-201-203-205-207
PAF15-07000031		66-67-68-69-137
PAF15-07000100	66M-11181-10	185-215
PAF15-07000100		218
PAF15-07000200	66M-85580-00	107
PAF15-07000300	66M-85520-00	106
PAF15-07000400	66M-85533-00	104
PAF15-07000500	66M-85540-10	118
PAF15-07000600	66M-85570-00	104
PAF15-07010000	66M-15100-02-1S	183
PAF15-07010003	6C5-12858-00	187
PAF15-07010003	90401-20M00	183-191-197
PAF15-07010004	90344-51003	203-205
PAF15-07010006	6E5-24377-00	181-183
PAF15-07010007	90445-10M46	183
PAF15-07010008	66M-11325-00	183
PAF15-07010009	66M-11328-00	65-66-67-68-69 183-191-197-203-205-207
PAF15-07010011	66M-11327-00-94	168-183-191-197-203-205-207
PAF15-07010012	66M-12535-00	183-191-197-203-205-207
PAF15-07010014	66M-11357-00	183
PAF15-07010015	90465-08M83	195
PAF15-07010018	66M-41114-01	65-140-183
PAF15-07010019	66M-41113-20-1S	183
PAF15-07010021	6H3-12413-00-1S	197-207-241
PAF15-07010021	6H3-12413-00-9M	191
PAF15-07010021	6H3-12413-001S	183
PAF15-07010022	62Y-12414-00	138-183-191-195-197-201
PAF15-07010022		66-67-68-69
PAF15-07010023	5GH-13440-00	183
PAF15-07010024	66M-11416-00	183
PAF15-07010026	6E5-11325-00	183
PAF15-07010027	90480-12072	185-209-211
PAF15-07010103	62Y-82504-10	103
PAF15-07010103	65W-82504-00	103
PAF15-07010200	66M-11168-001S	183
PAF15-07020001	66M-11631-00-96	183-219
PAF15-07020005	93450-15023	183-219
PAF15-07020006	634-11633-00	183-219
PAF15-07020100	66M-11650-00	183
PAF15-07030000	66M-11411-00	183-219
PAF15-07030003	66M-11536-10	185
PAF15-07030004	66M-11557-00	185
PAF15-07030005	90170-28M37	185
PAF15-07030006	93102-25014	189
PAF15-07030006	93102-35M51	183
PAF15-07030007	93102-25M52	183
PAF15-07040000	66M-11111-01-1S	185
PAF15-07040001	66M-12111-00	185
PAF15-07040002	66M-12121-00	185
PAF15-07040004	66M-12116-00	185
PAF15-07040005	66M-12113-00	185
PAF15-07040006	30X-12117-00	189-193-195-199-201-203-207
PAF15-07040007	30X-12118-00	185-189-193-195-199-201-203-207

REF	R.O. / OEM	
PAF15-07040008	93102-18M21	180-185
PAF15-07040009	90387-13001	185
PAF15-07040011	90387-13002	185
PAF15-07040012	90387-13M56	180-185
PAF15-07040013	90501-12M41	185
PAF15-07040014	90501-12M40	180-185
PAF15-07040015	66M-12146-00	185-189
PAF15-07040016	66M-13329-10	185
PAF15-07040017	90201-13201	180-185
PAF15-07040018	66M-11537-00-94	185
PAF15-07040200	66M-12170-00	185
PAF15-07040301	66M-12151-10	185
PAF15-07040303	62Y-12159-00	185-193-199
PAF15-07040303	64J-12159-00	189
PAF15-07040304	62Y-12158-00	185-189-193-195-199-201-203-205-207
PAF15-07040500	66M-13300-10	185
PAF15-07050001	66M-11191-00-1S	185
PAF15-07050002	66M-11356-00	185
PAF15-07050003	90480-10M16	185
PAF15-07050004	69M-E5363-00	171-180
PAF15-07050004	6G8-15363-00	181-185-187-191-195-197-201-203-205-207-209-211-213-214
PAF15-07050006	30X-12117-00	185
PAF15-07060001	6J8-81960-00	117
PAF15-07070000	66M-85550-00	109
PAF15-07070100W	66M-85550-10	109
PAF15-07080000	61N-24560-00	80
PAF15-07080002	61N-24521-00	80
PAF15-07090000	66M-14301-00	91
PAF15-07090000W	66M-14301-00	91
PAF15-07130001	63V-15716-00	113
PAF15-07130107	63V-15713-00	112
PAF15-07130201	63V-15714-00	113
PAF15-07130202	63V-15741-00	112
PAF15-07130203	63V-15767-00	112
PAF15-07130204	63V-15784-00	112
PAF15-07140000	66M-24410-11	85
PAF15-09000000	6G1-24306-55	74
PAF15-09000000	6Y1-24306-55-00	74
PAF15-10000002	6YJ-24167-00	75
PAF15-10000003	6Y1-24268-00	76
PAF15-10010000	6YJ-24610-00	75
PAF15-10010000	6YJ-24610-01	75
PAF15-10020000	6YJ-24260-00	76
PAF15-10020000	6YJ-24260-10	76
PAF15-10030001	66M-12138-60	185
PAF15-11000002W	703-48293-10	128
PAF15-11020000W	63V-61350-00	130
PAF15-13000100W	688-82586-21	128
PAF15-13000200W	703-82510-12	113
PAF15-13010010W	703-48245-00	129
PAF15-13020007W	703-48152-00	128
PAF166-010003	51Y-12119-00	179-193
PAF2.6-00000003	69M-45113-A0	173-217-218
PAF2.6-00000004	69M-24575-00	76
PAF2.6-02000003L	69M-44361-10	283
PAF2.6-02000003S	69M-44361-00	283
PAF2.6-03000001	69M-G5311-00-4D	283
PAF2.6-03000002	6L5-45317-09	283
PAF2.6-03000003	6L5-45316-09	283
PAF2.6-03000004	93103-09M41	283
PAF2.6-03000007	69M-G5315-A0	283
PAF2.6-03000008	69M-G5321-00-94	283
PAF2.6-03000009	93210-05001	283
PAF2.6-03000010	69M-G4323-00	148-154-283
PAF2.6-03000011L	69M-G5511-10	283
PAF2.6-03000011S	69M-G5511-00	283
PAF2.6-03000012	93440-08819	283
PAF2.6-03000013	93604-07M13	283
PAF2.6-03000013	93604-09068	343
PAF2.6-03000013		64-154
PAF2.6-03000014	69M-G4311-00	147-154-283
PAF2.6-03000015	6L5-44322-00	154-283
PAF2.6-03000016	69M-G4328-00	283
PAF2.6-03000017	646-45534-00-03	343
PAF2.6-03000017	6L5-45533-00-20	283
PAF2.6-03000018	6L5-45551-00	283
PAF2.6-03000019	6L5-45560-00	283
PAF2.6-03000020	69M-G5635-00	283
PAF2.6-030000201	6L5-45631-00	283
PAF2.6-03000021	90201-13198	283
PAF2.6-03000100	6L5-44352-00	64-283
PAF2.6-03000202	6L5-45631-00	283

REF	R.O. / OEM	
PAF2.6-03000300		283
PAF2.6-03000301	69M-G5361-00-4D	283
PAF2.6-03000302		283
PAF2.6-03010000	6E0-45949-00	287
PAF2.6-03010000	6L5-45943-00-EL	283
PAF2.6-03010000	6L5-45949-00-EL	402
PAF2.6-03020000L	69M-65300-11-4D	277
PAF2.6-03020000L	69M-G5300-01-4D	283
PAF2.6-03020000S	69M-65300-01-4D	277
PAF2.6-03020000S	69M-G5300-00-4D	283
PAF2.6-04000001	69M-11181-00	173-215-218
PAF2.6-04000002	69M-12154-00	173
PAF2.6-04000003	90201-23008	173
PAF2.6-04000004	69M-11351-A0	171-270
PAF2.6-04000005	69M-11193-A0	173
PAF2.6-04000006	69M-E1191-00-1S	173
PAF2.6-04000007	90445-09808	173
PAF2.6-04000008	69M-G2743-00	171
PAF2.6-04000009	6G8-44532-00	171
PAF2.6-04000015	90445-07MA3	237
PAF2.6-04000100	69M-12170-01	173
PAF2.6-04000200	69M-14301-21	91
PAF2.6-04000501	69M-E2413-00-1S	173
PAF2.6-04000600	69M-85640-00	106
PAF2.6-04010001	93102-20070	220
PAF2.6-04010001	93102-20108	171-177-179
PAF2.6-04010100	69M-E1311-00-1	171
PAF2.6-04010102	69M-15361-00	171
PAF2.6-04020001	69M-E1631-01-96	173-219
PAF2.6-04020005	69M-E1633-00	173-219
PAF2.6-04020006	93450-13130	173
PAF2.6-04020100	69M-11650-00	173
PAF2.6-04030000	69M-11400-00	173-219
PAF2.6-04040001	69M-E2155-00	173
PAF2.6-04040100	69M-E1111-00-1S	173
PAF2.6-04050001	69M-E5111-00-1S	171
PAF2.6-04050100	69M-E3102-00	171
PAF2.6-04060000	69M-E5396-00-5B	171
PAF2.6-04060001	69M-E5396-00	171
PAF2.6-04060002	93210-09004	171
PAF20-02000005	6AH-44368-00	293
PAF20-02000007	6AH-44365-00	293
PAF20-02000101L	6AH-44361-11	293
PAF20-02000101S	6AH-44361-01	293
PAF20-04000000L	6AH-45300-10-4D	277
PAF20-04000000L	6AH-45300-10-8D	277-292
PAF20-04000000S	6AH-45300-00-4D	277
PAF20-04000000S	6AH-45300-00-8D	277-292
PAF20-04000001	69G-45315-A0	292
PAF20-04010001	69G-45331-01-CA	292
PAF20-04020000L	6AH-44150-10	292
PAF20-04020000S	6AH-44150-00	292
PAF20-04030000L	6AH-45510-10	293
PAF20-04030000S	6AH-45510-00	293
PAF20-04040001	6AH-44311-00	147-293
PAF20-05000000	6AH-W009B-02-1S	189
PAF20-05000002	90105-090006	187
PAF20-05000003	6AH-46241-00	189-267
PAF20-05000016	6AH-12481-00	187
PAF20-05000027	6AH-11536-00	189
PAF20-05000028	6AH-11557-00	189
PAF20-05000029	90170-30003	189
PAF20-05000034	90480-10627	189
PAF20-05000036	90480-06M19	189
PAF20-05000100	6AH-85580-00	107
PAF20-05000200	6AH-85510-00	121
PAF20-05000300	6AH-85540-00	118
PAF20-05000500	6AH-85550-00	109
PAF20-05000500W	6AH-85550-10	109
PAF20-05000600	6AH-41113-01-1S	187
PAF20-05000602	6AH-41114-00	187
PAF20-05000700	6AH-12413-00-1S	187
PAF20-05000702	6AH-12414-00	65-187
PAF20-05000900W	6AH-81800-00	111
PAF20-05000900W	6AH-81800-01	111
PAF20-05010000	6AH-15100-00	187
PAF20-05010003	6AH-11416-00	189
PAF20-05010007	97013-06040	187
PAF20-05020001	6AH-11631-00	189-219
PAF20-05020002	93450-17129	189-219
PAF20-05020003	137-11633-10	189-219
PAF20-05020004	6AH-11411-00	189-219
PAF20-05020100	6AH-11603-00	189-219
PAF20-05020200	6AH-11650-10	189
PAF20-05030001	6AH-12111-00	189
PAF20-05030002	6AH-12121-10	189

REF	R.O. / OEM	
PAF20-05030003	62Y-12116-00	189
PAF20-05030004	3YF-12113-00	189
PAF20-05030005	93102-22010	189
PAF20-05030006	90387-13006	189
PAF20-05030007	90501-120A5	189
PAF20-05030008	6AH-12279-00	189
PAF20-05030009	6G8-11197-01	203-205
PAF20-05030009	6G8-11197-A0	187
PAF20-05030010	6AH-13329-10	189
PAF20-05030011	90201-15423	189
PAF20-05030012	6AH-11537-00	189
PAF20-05030013	90201-08784	189
PAF20-05030100	6AH-11111-10-1S	187
PAF20-05030200	6AH-12170-00	189
PAF20-05030301	6AH-12151-00	189
PAF20-05030400	6AH-13300-00	189
PAF20-05040000	6AH-11191-001S	187
PAF20-05040002	6AH-11356-00	187
PAF20-05040003	6AH-11168-00	187
PAF20-05040004	6AH-11169-00	187
PAF20-05040005	62Y-14485-00	195
PAF20-05040005	6AH-11372-00	187
PAF20-05050000	6AH-24410-00	85
PAF20-05000702	6AH-12414-00	138
PAF20-07000100W	63AH-61350-00	130
PAF25-00000011	90105-10M12	295
PAF25-00000013	65W-11351-00	191
PAF25-00000013	65W-11351-10	217
PAF25-00000013		218
PAF25-00000014	93608-12063	235-239-241-243
PAF25-00000014	99530-08012	191-197-201-203-205-207
PAF25-01000001	90386-52M02	133
PAF25-01000004	90386-44M03	133
PAF25-01010002	90386-22M15	133
PAF25-02000004L	65W-44361-10	297
PAF25-02000004S	65W-44361-00	297
PAF25-02000005	90430-12072	297
PAF25-02000019	90202-12060	297-301-305-309-367-371
PAF25-02010005	62Y-11325-00	191
PAF25-02010007	67C-15312-00	271
PAF25-03000007	90387-06M69	133
PAF25-03000008	90445-09068	191-197-207
PAF25-03000009	90445-09095	191-197-207
PAF25-03000009	90445-09104	195
PAF25-03000011	90445-09105	191
PAF25-03000011	90445-09251	195
PAF25-04000001	61N-45311-02-4D	295
PAF25-04000002	61N-45536-00	297-355
PAF25-04000003-2	61N-45587-00-10	297
PAF25-04000003-3	61N-45587-00-11	297
PAF25-04000003-4	61N-45587-00-12	297
PAF25-04000003-5	61N-45587-00-13	297
PAF25-04000003-6	61N-45587-00-14	297
PAF25-04000003-7	61N-45587-00-15	297
PAF25-04000004-3	6L2-45567-12	295
PAF25-04000004-5	6L2-45567-14	295
PAF25-04000005	61N-45551-00	295
PAF25-04000007	93604-08062	214-223-239-301-305-309-313-349-357-363-367
PAF25-04000007	93604-10M03	195-203-205-297-321-355-371
PAF25-04000008	65W-45331-00-5B	297
PAF25-04000009	61N-45315-00	297-355
PAF25-04000012	65W-44176-00	297
PAF25-04000013	61N-45127-00	297-355
PAF25-04000015	90280-03024	155-297
PAF25-04000016	65W-44328-00	297
PAF25-04000017	61N-44362-10	297-355
PAF25-04000017S	61N-44362-00	297-355
PAF25-04000021	61N-45214-00	295
PAF25-04000022	6L2-45214-00	295
PAF25-04000023	6L2-45215-00	295
PAF25-04010000L	61N-45510-10	297
PAF25-04010000S	61N-45510-00	297
PAF25-04030000L	65W-44150-10	297
PAF25-04030000S	65W-44150-00	297
PAF25-04050000		297
PAF25-04050001	61N-44311-01	148-154-155-297-355
PAF25-04050003	93210-45161	66-154-155-297-355
PAF25-04050004	6L2-44367-00	66-154-155-293-297-355
PAF25-04060000		295
PAF25-04060002	90501-10065	295-355-357

REF	R.O. / OEM	
PAF25-04060003	664-45631-02	295
PAF25-04060007	90201-20417	295
PAF25-04070000		295-388-389
PAF25-04070001	61N-45361-01-4D	295-355
PAF25-04070004	61N-45571-00	295
PAF25-04070005-1	6L2-45577-00-10	295-355
PAF25-04070005-3	6L2-45577-00-12	295
PAF25-04080000	664-45947-01-EL	295
PAF25-04090000L	65W-45300-01-4D	278
PAF25-04090000L	65W-45300-10-4D	295
PAF25-04090000S	65W-45300-00-4D	295
PAF25-04090000S	65W-45300-01-4D	278
PAF25-05000002	90119-09M00	191-197-207
PAF25-05000003		191
PAF25-05000004	65W-11356-00	191
PAF25-05000005	65W-11191-00-94	191
PAF25-05000007	65W-15121-00	191
PAF25-05000016	90464-07M05	241
PAF25-05000021	65W-11536-10	193-199
PAF25-05000022	65W-11476-00	193-199
PAF25-05000024	90280-04M06	199
PAF25-05000026	90170-20137	195
PAF25-05000026	90170-35M47	193
PAF25-05000100	5GH-13440-00	191
PAF25-05010000	65W-15100-00-94	191
PAF25-05010103	65W-11168-00	191
PAF25-05010106	65W-11119-00	197
PAF25-05010106	66W-11119-00	191
PAF25-05010107	65W-13286-00	191
PAF25-05010108	65W-11169-00	191
PAF25-05010111	65W-41114-00	141-191
PAF25-05010112	65W-41113-01-94	191
PAF25-05010113	62Y-11372-01	191
PAF25-05010113	62Y-12481-10	203-205
PAF25-05010201	65W-85790-00	103
PAF25-05010302-1	62Y-11416-00	193-199
PAF25-05010302-2	62Y-11416-10	193-199
PAF25-05020001	65W-11411-01	193-219
PAF25-05020002	93102-35M47	193-199
PAF25-05020003	93102-43M42	193-195-199-201-203-207
PAF25-05020100	65W-11631-00-96	193-199-219
PAF25-05020101	65W-11631-00-96	193-199
PAF25-05020105	62Y-11633-00	193-195-199-201-203-205-207-219
PAF25-05020106	93450-17129	193-195-199-201-203-205-207-219-231
PAF25-05020200	62Y-11650-10	199
PAF25-05020200	67C-11650-00	193
PAF25-05020200	6C5-11650-00	195-203-207
PAF25-05020200	6C5-11650-10	201-205
PAF25-05020203-1	62Y-11656-00	193-199
PAF25-05020203-2	62Y-11656-00	193
PAF25-05020203-2	62Y-11656-10	199
PAF25-05020204	62Y-11654-00	193-199
PAF25-05020204	6AH-11654-00	189
PAF25-05020204	6C5-11654-00	195-201-203-205-207
PAF25-05020301	65W-11642-11	193
PAF25-05020310	65W-11665-00	193
PAF25-05040000	65W-11181-30	191-215-218
PAF25-05050001	67C-12111-00	193-199
PAF25-05050002	62Y-12121-00	193-199-207
PAF25-05050003	62Y-12116-00	193-195-199-201-203-207
PAF25-05050005	51Y-12114-00	193-195-199-201-203-207
PAF25-05050006	90109-06M65	191-195-197-201-203-205-207
PAF25-05050007	90430-06014	191-195-197-201-203-205-207
PAF25-05050008	65W-12146-00	193
PAF25-05050009	62Y-12238-00	193-207
PAF25-05050011	62Y-12216-00	193-199-207
PAF25-05050012	62Y-12231-00	193-207
PAF25-05050013	93210-12MG9	193-199-207
PAF25-05050014	93210-14515	193-199-207
PAF25-05050015	93210-33MH2	193-199-207
PAF25-05050016	93605-14143	193-199-207
PAF25-05050017	65W-11537-01	193
PAF25-05050018	90201-10144	201
PAF25-05050018	90201-10M06	193-199-207
PAF25-05050019	90109-08M63	193-199-207
PAF25-05050021	93102-37004	189
PAF25-05050021	93102-37M40	193-195-199-201-203-205-207

REF	R.O. / OEM	
PAF25-05050100	65W-11111-02-94	191
PAF25-05050200	65W-12171-10	193
PAF25-05050300		193
PAF25-05050301	65W-12151-00	193-199
PAF25-05050400	65W-13300-00	193
PAF25-05070000	65W-14901-12	91
PAF25-05070019	6H4-14548-00	99
PAF25-05080004	65W-14457-10	268
PAF25-05110000	65W-85580-00	107
PAF25-05120000	65W-85570-01	104
PAF25-05130000	62Y-24410-04	85
PAF25-05130005	62Y-24471-00	87
PAF25-05140000	65W-85510-10	121
PAF25-05150000	65W-85550-01	109
PAF25-07000007W	703-48345-01	127
PAF25-07000300W	65W-61350-00	130
PAF4-00000001	90387-06806	285-287
PAF4-00000001	90387-06M14	345
PAF4-00000006	67D-45113-A0	175-217-218
PAF4-01090100	6EG-G2138-00	130
PAF4-01090100	6G1-42138-00	130
PAF4-01090100	6G1-42138-01	130
PAF4-01090300	68D-G2177-10	133
PAF4-01090300	6EE-G2177-00	133
PAF4-01090401	682-82556-00	120
PAF4-02040001	68D-G4360-10	285
PAF4-02040001S	68D-G4360-00	285
PAF4-02040002	68D-G4365-00	283-285
PAF4-03000001	68D-G5300-11-4D	285
PAF4-03000002	6E0-45317-09	285-287
PAF4-03000003	6E0-45316-09	285-287
PAF4-03000004L	68D-G5511-10	287
PAF4-03000004L	6E0-45511-11	285
PAF4-03000004S	68D-G5511-00	287
PAF4-03000004S	6E0-45511-01	285
PAF4-03000005	90467-08M01	285-287-345
PAF4-03000006	90201-11M49	287-343
PAF4-03000006	90204-11M49	285-345
PAF4-03000007	6E0-45551-00	285
PAF4-03000008	67D-45635-00	285-287
PAF4-03000011	68D-G5315-A0	285-287
PAF4-03000011	6E0-45315-A0	345
PAF4-03000012	68D-G5321-00	285-287
PAF4-03000012	6E0-45321-01-5B	345
PAF4-03000013	93604-18080	283-285-287-345
PAF4-03000015	6E0-44323-00	154-155-285-345
PAF4-03000016	93604-09066	64-154-285-287-345
PAF4-03000017	6E0-44322-02	285
PAF4-03000018	68D-G4315-A0	285
PAF4-03000018	6BX-G4315-01	287
PAF4-03000018	6E0-44315-A0	345
PAF4-03000018		64-154
PAF4-03000019	68D-G4311-01	147-285
PAF4-03000019	6E0-44311-00	345
PAF4-03000019		154
PAF4-03000020	68D-G4328-00	285-287
PAF4-03000020	6E0-44328-00	345
PAF4-03000021	67D-44366-00	285-287
PAF4-03000021	6E0-44366-00	345
PAF4-03000021	6R0-44366-00	283
PAF4-03000021		154-155
PAF4-03000022	68D-G5251-00	64-283-285
PAF4-03000025	68D-G5978-00	283
PAF4-03000025	68D-G5987-00	285-287
PAF4-03000025	6L5-45987-01	345
PAF4-03000025		405
PAF4-03000026	90201-08M54	283-285-287-345-405
PAF4-03000027	93101-10M14	285-287
PAF4-03010000	67D-45560-00	285-287-387
PAF4-03020000L	68D-G4150-10	285
PAF4-03020000L	6BX-G4150-10	287
PAF4-03020000S	68D-G4150-00	285
PAF4-03020000S	6BX-G4150-00	287
PAF4-03030002	67D-45631-01	285-287
PAF4-03030003	90501-10064	283
PAF4-03040000	67D-45570-00	285-287-387
PAF4-03050001	68D-G5361-00-4D	285-287
PAF4-03050001	6E0-45361-01-4D	345-387
PAF4-03050002	93101-13M12	283-285
PAF4-03060000	6E0-44352-00	64-285
PAF4-03070000	6E0-45943-01	287
PAF4-03070000	6E0-45943-01-EL	285-402
PAF4-03080000	6L5-45616-00	283-285-287-405

REF	R.O. / OEM	
PAF4-0310000L	68D-65300-11-4D	277
PAF4-0310000L	68D-G5300-10-4D	285
PAF4-0310000S	68D-65300-03-4D	277
PAF4-0310000S	68D-G5300-00-4D	285
PAF4-04000000	680-WE090-11-15	175
PAF4-04000001	90105-08M76	171
PAF4-04000001	97095-08020	331-335-337-341
PAF4-04000001	97095-08020-00	177
PAF4-04000002	68D-11351-A0	177-270
PAF4-04000003	99510-10114	175-177-179
PAF4-04000004	90201-266P2	175
PAF4-04000006	90201-08818	177
PAF4-04000006	90201-08818-00	171
PAF4-04000006	90430-08143	197-209-211
PAF4-04000006	90430-08800	179
PAF4-04000006	90430-08800-00	175
PAF4-04000006		64-66
PAF4-04000007	68D-E5362-00	177
PAF4-04000008	93210-24M79	177-180-185-201-203-205
PAF4-04000009	68D-E1169-A0	177
PAF4-04000010	68D-E1168-00	177
PAF4-04000010	68D-E5362-00	179
PAF4-04000011	68D-E2414-A0	64-138-173-175-179
PAF4-04000012	90445-09807	175
PAF4-04000014	67D-11181-A0	175-215-218
PAF4-04000015	67D-12154-00	175
PAF4-04000017	68D-E1193-A0	175
PAF4-04000018	67D-11191-00	175
PAF4-04000019	90280-04M06	193-207
PAF4-04000030	90467-08004	75-243
PAF4-04000030	90467-09M09	191-225
PAF4-04000030		64-65-67
PAF4-04000033	90105-08046-00	175
PAF4-04000034	90105-08M36	173-179-180
PAF4-04000034	90105-08M36-00	175
PAF4-04000036		177
PAF4-04000038	67D-85640-00	106
PAF4-04010003	68D-E5346-00	177
PAF4-04010004	93102-25090	177
PAF4-04010100	68D-E1311-02-15	177
PAF4-04010102	650-24378-00	173-175-177-179-180-235-237-241
PAF4-04010102	6E9-24378-00	187
PAF4-04020001	68D-E1631-00-96	175
PAF4-04020005	68D-E1633-00	175-219
PAF4-04020006	93450-14088	175-219
PAF4-04020100	67D-11650-00	175
PAF4-04020103	67D-11654-00	175
PAF4-04020200	68D-E1631-00-96	175-219
PAF4-04030000	67D-11400-00	175-219
PAF4-04040000	68D-E2170-00	175
PAF4-04050100	68D-E3102-00	177
PAF4-04050200	68D-E5111-00-1S	177
PAF4-04060000		177
PAF4-04060001	68D-E5396-00-5B	177-179
PAF4-04060002	93210-35537	171-177
PAF4-04060004	93102-10004	177-179
PAF4-04070000	68D-E2413-00-1S	179
PAF4-04070001	67D-12413-00-1S	175
PAF4-04070003	68D-E1325-00	64-65-66-67-68-69-70-71-173-175-179
PAF4-04070100	68D-E2413-001S	175
PAF4-04080005	67D-12111-00	175
PAF4-04080006	67D-12121-00	175-180
PAF4-04080007	68T-12116-00	175-179-180
PAF4-04080008	68D-E2113-00	173-175
PAF4-04080009	68D-E2155-00	175
PAF4-04080101	68D-E1111-10-1S	175
PAF4-04090000	67D-24410-03	85
PAF4-04120005	6L5-24251-00	64-80-81-82
PAF4-04120100	67D-24610-00	75
PAF4-04120100	67D-24610-02	75
PAF4-04120100	67D-24610-03	75
PAF4-04120100	67D-24610-04	75
PAF4-04120100	68D-24610-10	75
PAF4-04120103	624-24634-00	75
PAF4-04130100	6G1-15755-00	113
PAF4-04130100	6G1-15779-00	113
PAF4-04140000	67D-14301-03	91
PAF4-05000010	90467-13M13	75
PAF4-05000300	646-24251-01	80
PAF4-05000300	646-24251-02	80
PAF4-05000300		64-81

REF	R.O. / OEM	
PAF40-04000000L	66T-45300-00-4D	279
PAF40-04000000L	66T-45311-01-4D	279
PAF40-05000053	90445-10M40	209
PAF40-05040003	62Y-12279-00	207
PAF40-05040006	67C-11537-01	199
PAF40-05070002	62Y-14485-00	197-201-203-207
PAF40-0701000EI	907-94469-05	79
PAF6-00000001	6BX-45113-00	151-179-217
PAF6-03000002	6BX-44322-00	154-287
PAF6-04000001	6BX-11351-00	179
PAF6-04000002	6BX-11181-00	179-215
PAF6-04000003	6BX-12154-00	179
PAF6-04000004	6BX-E1191-00-5B	179
PAF6-04000005	6BX-11356-00	179
PAF6-04000009	6G0-82519-00	179
PAF6-04000020	6BX-F4323-00	179
PAF6-04010004	6BX-E1168-00	179
PAF6-04030000	6BX-E2170-00	179
PAF6-04050001	6BX-12111-00	179
PAF6-04050002	6AU-12121-00	179
PAF6-04050003	60R-12113-00	179
PAF6-04050004	6BX-E2155-00	179
PAF6-04050100	6BX-E1111-00-1S	179
PAF60-02000007	6C5-44361-00	313
PAF60-04000000	69W-45300-00-4D	278
PAF60-04000000	69W-45300-00-8D	278
PAF60-04000000	69W-45300-01-8D	278
PAF60-04000000	69W-45300-04-8D	311
PAF60-04000001	69W-45301-00-8D	311
PAF60-04000002	69W-45551-00	311
PAF60-04000003	62Y-44151-00	303-307-311
PAF60-04000008	63D-45344-00	313
PAF60-04000101	63D-45321-00	305-309-313
PAF60-04000500	62Y-45571-00	311
PAF60-04000600	69W-45560-00	311
PAF60-04010000	69W-45501-00	313
PAF60-04020001	63D-45611-00	303-307-311
PAF60-04020002	90501-18001	303-307-311
PAF60-04020003	62Y-45631-00	307-311
PAF60-04020005	63D-45635-00	303-307-311
PAF60-04030000		307-311
PAF60-06000000	6C5-43800-11	124
PAF60-06000000	6C5-43800-12	124
PAF8-05000022	90119-06MA3	187
PAF8-05030006	7NJ-12117-00	173-175
PAF8-05030007	7NJ-12118-00	173-175-179
PAGB/T1099-3X5X13	90280-03017	201
PAGB/T1099-3X5X13	90280-03M01	180-185-189-195-203-205
PAGB/T276-6004C2	93306-004UO	345
PAGB/T276-6004C2	93306-004YH	289
PAGB/T276-6004C2	93306-205YD	177
PAGB/T276-6006/P6	93306-00612	295
PAGB/T276-62/22/P6	93306-272Y2	171
PAGB/T290F-2020	93315-220V7	297
PAGB/T345.2-D32.5XD1	93210-35537	179
PAGB/T3452.1-13X2	93210-13M63	64-65-68-69-70-71-180-187-195-201-203-205
PAGB/T3452.1-25.8X2	93210-22164	355
PAGB/T3452.1-25.8X2	93210-26130	297-355
PAGB/T3452.1-32.5X1.8		65-66-67-68-69-70-71
PAGB/T5287-6	90201-06M94	180-185
PAGB/T5782-2000S		285
PAGB/T5782-M6X125	95895-06035	295
PAGB/T5782-M6X125	97013-06035	193
PAGB/T5782-M6X125		285
PAGB/T5782-M6X25	97095-06025	209-213-231
PAGB/T5782-M6X35	90119-06MA5	191-203-205-233-241
PAGB/T5782-M6X45	90105-06M25	175
PAGB/T5782-M6X45	947395-06040	349
PAGB/T5782-M8X35	65W-08M87	191
PAGB/T5782-M8X80	90119-08M01	191
PAGB/T5783-M5X10	97013-05010	179
PAGB/T5783-M5X12	68D-E5362-00	183
PAGB/T5783-M5X12	90119-06M48	295
PAGB/T5783-M5X12	90201-08818	183
PAGB/T5783-M5X12	90465-08M99	171
PAGB/T5783-M5X12	92995-06600	185-237
PAGB/T5783-M5X12	93102-25090	183
PAGB/T5783-M5X12	93306-205YD	183
PAGB/T5783-M5X12	95895-06016	287-289
PAGB/T5783-M5X12	95895-06016-00	285
PAGB/T5783-M5X12	95895-06020	283
PAGB/T5783-M5X12	97013-06016	185-223-229

REF	R.O. / OEM	
PAGB/T5783-M5X12	97013-06045	171
PAGB/T5783-M5X12	97095-05012	191
PAGB/T5783-M5X12	97095-0512	183
PAGB/T5783-M5X12	97095-06035	185
PAGB/T5783-M5X12	97575-08550-00	183
PAGB/T5783-M5X16	97095-05016	343
PAGB/T5783-M6X10	97095-06010	197-349-363
PAGB/T5783-M6X12	95817-06012	171
PAGB/T5783-M6X12	95817-06012-00	177
PAGB/T5783-M6X12	97013-06012	189
PAGB/T5783-M6X14	90119-06M80-00	177
PAGB/T5783-M6X14	95895-06012	287
PAGB/T5783-M6X16	90105-06039	173
PAGB/T5783-M6X16	90105-06M14	175
PAGB/T5783-M6X16	92995-06600	371
PAGB/T5783-M6X16	97090-06014	343
PAGB/T5783-M6X16	97095-06016	221-223-225-227-231-235-239-321-339
PAGB/T5783-M6X20	65W-12228-00	191
PAGB/T5783-M6X20	90119-06MA2	179-227
PAGB/T5783-M6X20	90119-06MA3	191
PAGB/T5783-M6X20	97095-06020	171-173-179-180-191-195-197-201-203-205-207-209-213-233-237-241-291-347-351
PAGB/T5783-M6X20	97095-06020-00	175
PAGB/T5783-M6X20	97395-06020	349
PAGB/T5783-M6X20	97575-06520	293
PAGB/T5783-M6X20	97595-06520	185-187
PAGB/T5783-M6X20	65W-12228-00	191
PAGB/T5783-M6X25	90119-06MA3	187-191-235
PAGB/T5783-M6X25	90119-06MA5	191
PAGB/T5783-M6X25	90119-08MA5	235
PAGB/T5783-M6X25	97513-06525	185
PAGB/T5783-M6X30	90119-06M04	227
PAGB/T5783-M6X30	90119-06MA4	235
PAGB/T5783-M6X30	90119-06MA5	195
PAGB/T5783-M6X30	95895-06035	293
PAGB/T5783-M6X30	970-95-06030	231
PAGB/T5783-M6X30	97095-06030	180-211-213-343-346
PAGB/T5783-M6X35	90105-06035	189
PAGB/T5783-M6X35	90119-06MA5	243
PAGB/T5783-M6X35	90119-06MAS	191
PAGB/T5783-M6X35	95895-06012	343-347
PAGB/T5783-M8X14	97095-08014	171-179
PAGB/T5783-M8X14	97095-08014-00	175
PAGB/T5783-M8X20	97095-08020	179
PAGB/T5783-M8X20	97095-08020-00	177
PAGB/T5783-M8X25	90105-081A7	189
PAGB/T5783-M8X25	97075-08025	209
PAGB/T5783-M8X25	97080-08025	289-291-292-351
PAGB/T5783-M8X25	97095-08025	299-303-307-311-325-329-333-339
PAGB/T5783-M8X30	97575-08530	293
PAGB/T5783-M8X35	90101-08001	235
PAGB/T5783-M8X35	97075-08035	289
PAGB/T5783-M8X35	97095-08035	303-307-311
PAGB/T5787-1986	97575-08550-00	177
PAGB/T6182-M5	90185-05002	289-293-315-319-323-327-331-335-337-341-350
PAGB/T818-M4X10	97607-04210	187
PAGB/T818-M4X10	98507-04010	195-197-201-203-205-207
PAGB/T818-M4X6	98503-04066-00	177
PAGB/T818-M5X12	97095-05012	197-203-205-207
PAGB/T818-M5X16	98780-05016	211
PAGB/T818-M5X25	97880-05025	173-179-203-205
PAGB/T818-M5X25	97880-05025-00	175
PAGB/T818-M5X25	98980-05025	187
PAGB/T818-M6X16	98580-06016	365
PAGB/T820-M4X12	98780-04015	213-239
PAGB/T820-M4X12	98780-04016	187-209-237
PAGB/T820-M5X20	90152-05011	293
PAGB/T820-M5X25	90152-05M03	289
PAGB/T820-M5X25	90152-05M04	350
PAGB/T820-M5X30	6E0-W0078-00	345
PAGB/T820-M5X30	6E0-W0078-01	345
PAGB/T820-M5X30	6E0-W0078-02	345
PAGB/T820-M5X30	90142-05M06	299
PAGB/T820-M5X30	90151-05M05	295
PAGB/T820-M5X30	90152-05010	303-311
PAGB/T820-M5X30	90152-05M06	307

REF	R.O. / OEM	
PAGB/T820-M5X30		365
PAGB/T845-ST4.2X16	97780-40112	349
PAGB/T845-ST4.8X9	97780-50510	349
PAGB/T848-6	92903-06600	203-205
PAGB/T861.1-6	92990-06300	293
PAGB/T861.1-87	92990-06300	283-287-289-295-343-347
PAGB/T879.4-3X20	91690-30010	235
PAGB/T889.1-2000	90185-05002	295
PAGB/T889.1-M5	95380-05600	299-303-307-311-365
PAGB/T893.1-22	93420-22M03	287
PAGB/T896-86	93430-06005	343
PAGB/T896-86	99001-06600	283-285-345
PAGB/T896-9	93430-10M00	132
PAGB/T896-9	99080-10600	132
PAGB/T91-1.6X12	91490-25030	283-285-287-345
PAGB/T91-1.6X12	91490-30022	295-355
PAGB/T91-1.6X12		64-65-66-405
PAGB/T91-2.5X20	91490-30020	349
PAGB/T96-10	90201-10M01	293-349
PAGB/T96-6	92995-06600	195
PAGB/T97.1-10	92995-10100	299
PAGB/T97.1-14	92990-14200	355-357-405
PAGB/T97.1-4	92907-04600	195
PAGB/T97.1-5	92995-05600	191-197-207
PAGB/T97.1-6	92885-06600	177
PAGB/T97.1-6	92903-06600	187-197-207
PAGB/T97.1-6	92990-06600	185-231-301-343-347-349-367
PAGB/T97.1-6	92995-06600	171-173-175-179-180-195-197-201-203-205-209-211-213-221-223-225-235-239-287-288-291-297-317-321-339-351-355
PAGB/T97.1-6	97095-06016	371
PAGB/T97.1-8	66M-11328-00	193
PAGB/T97.1-8	66M-11356-00	191
PAGB/T97.1-8	92955-08600-00	177
PAGB/T97.1-8	92990-08600	367
PAGB/T97.1-8	92990-14200	295
PAGB/T97.1-8	92995-05600	183-203-205
PAGB/T97.1-8	92995-06600	185-227-229-233-241
PAGB/T97.1-8	92995-08600	179-209-214-325-329-333-335-337-341-343-363-369-377
PAGB/T97.1-8	92995-10600	295-299-303-307-311-315-319-331
PAGB/T97.1-8	93102-20108	183
PAGB/T97.1-8	97595-06520	183-191
PAGB/T97.1-8		191-193-283
PAGBT3452.1-97.5X1.8	65W-15663-00	191
PAHI-CAP32004JRKOYO	93332-000W5	297
PAHT-2.5X50	90465-11M10	293
PAHT-2.5X60	90465-11M10	180-191-197-207-209-213-301-305-309-313-317-321-325
PAHT-2.5X60	90467-06016	221-225-231-237-239-241
PAHT2.5X50	90465-11M10	187
PAJASOF404-19-033	93210-33M49	335-339
PAJASOF404-19-033	93210-33M85	283
PAJASOF404-19-033		64-154
PAJASOF404-31-045	93210-44398	351
PAJASOF40424-050	93210-48001	313
PAJASOF40431-025	93210-24M79	171-181-187-191-195-197-207-209-211-213-214
PAJASOF40431-025		64-65-69-70
PAJB/T9740.1-M6	93700-06M03	132
PAJISB2401P48	93210-48214	283-285
PAKOYOHI-CAP322/32	93332-00092	311
PANTN16003EY	93316-003Y0	283
PANTN6205C3	93306-205B2	179
PAPS2700.04.03	51Y-12119-00	175-185-199-203-205-207-213
PAT15-04010202	624-14485-00	235
PAT15-04010202	6H1-14485-00	171
PAT36-04000023	90465-06M86	179
PAT40-02000002	663-44367-00	301-305-309-313-317-321-367-371
PAT40-04000002	6H4-45536-00	301-305-309-313

REF	R.O. / OEM	
PAT40-04000003-1	663-45587-01	309
PAT40-04000003-1	663-45587-01-10	367
PAT40-04000003-2	663-45587-01-12	367
PAT40-04000003-2	663-45587-10	309
PAT40-04000003-3	663-45587-01-15	367
PAT40-04000003-3	663-45587-20	309
PAT40-04000003-4	663-45587-01-18	367
PAT40-04000003-4	663-45587-30	309
PAT40-04000003-5	663-45587-01-30	367
PAT40-04000003-5	663-45587-40	309
PAT40-04000003-6	663-45587-01-40	367
PAT40-04000003-6	663-45587-50	309
PAT40-04000003-7	663-45587-01-50	367
PAT40-04000003-7	663-45587-60	309
PAT40-04000004-1	663-45567-01	299-303-307-311
PAT40-04000004-1	663-45567-01-10	365
PAT40-04000004-2	663-45567-01-12	365
PAT40-04000004-2	663-45567-10	299-303-307-311
PAT40-04000004-3	663-45567-01-15	365
PAT40-04000004-3	663-45567-20	299-303-307-311
PAT40-04000004-5	663-45567-01-30	365
PAT40-04000004-5	663-45567-40	299-303-307-311
PAT40-04000007	66T-45321-00	301
PAT40-04000008	90201-27M00	301-305-309-313
PAT40-04000009	66T-45344-01	301-305-309
PAT40-04000014	63D-45375-00	301-305-309-313
PAT40-04000022	63D-45214-00	299-303-307-311
PAT40-04000023	63D-45215-00	299-303-307-311
PAT40-04000027	93332-00079	367
PAT40-04000003-1	663-45587-01	301-305-313
PAT40-04000003-2	663-45587-10	301-305-313
PAT40-04000003-3	663-45587-20	301-305-313
PAT40-04000003-4	663-45587-30	301-305-313
PAT40-04000003-5	663-45587-40	301-305-313
PAT40-04000003-6	663-45587-50	301-305-313
PAT40-04000003-7	663-45587-60	301-305-313
PAT40-04000201	66T-44311-00	148-301-305
PAT40-04040001	6BG-44341-00	313
PAT40-04050002	90501-15M01	361
PAT40-04050005	67C-45633-00	307-311
PAT40-04050007	90201-22008	311
PAT40-04060005-2	63D-45577-10	299-303-307-311
PAT40-04060005-3	63D-45577-20	299-303-307-311
PAT40-04060005-4	63D-45577-30	299-303-307-311
PAT40-04060005-5	63D-45577-40	299-303-307-311
PAT40-04060005-6	63D-45577-50	299-303-307-311
PAT40-04060005-7	63D-45577-60	299-303-307-311
PAT40-04070000	69W-45941-00-EL	402
PAT40-05000100	6AH-82560-00	103
PAT40-10000000	65W-43800-00-4D	124
PAT40-10000000	65W-43800-01-4D	124
PAT40-10000000	65W-43800-02-4D	124
PAT40-10000000	65W-43800-03-4D	124
PAT40-10000000	65W-43800-20-4D	124
PAT40-10000000	65W-43800-21-4D	124
PAT40-10000000	65W-43800-22-8D	124
PAT40-10000000	65W-43800-23-8D	124
PAT40-10020500	65W-43880-00	123
PAT40-10020500	65W-43880-01	123
PAT85-00000012	90105-10M00	323-327-331-335-337-375-379
PAT85-00000012	90105-16M67	315-319
PAT85-00000017	90386-18M35	133
PAT85-01010203	90386-10M16	133
PAT85-01020003	90386-30M78	133
PAT85-01020005	90386-30M77	133
PAT85-040000003-B	688-45587-01	317-321
PAT85-040000004-B	688-45567-01	315-319
PAT85-05000023	6C5-82105-01	112
PAT85-05000023	6H0-82105-02	112
PAT85-05000023	6H0-82105-J2	112
PAT85-05030300	6AH-81960-00	116
PAT85-08010100	688-8258A-20	128
PH130-0005	6E5-81800-10	110
PH130-0005	6E5-81800-11	110
PH130-0005	6E5-81800-12	110
PH130-0007	676-81800-10	111
PH130-0007	697-81800-10	111

REF	R.O. / OEM	
PH130-0007	697-81800-11	111
PH130-0007	697-81800-12	111
PH130-0007	99999-03249	111
PH130-0028	67C-81800-00	110
PH130-0028	67C-81800-01	110
PH130-0028	67C-81800-02	110
PH130-0029	65W-81800-00	111
PH130-0029	65W-81800-01	111
PH130-0029	65W-81800-02	111
PH130-0029	65W-81800-03	111
PH130-0034	66M-81800-01	111
PH130-0034	66M-81800-02	111
PH130-0049	689-81800-10	110
PH130-0049	689-81800-11	110
PH130-0049	689-81800-12	110
PH130-0049	689-81800-13	110
PH130-0050	6H3-81800-10	111
PH130-0050	6H3-81800-11	111
PH130-0051	61H-81800-00	110
PH130-0051	61H-81800-01	110
PH130-0051	6K7-81800-10	110
PH130-0051	6N7-81800-00	110
PH130-0051	6N7-81800-01	110
PH130-0051	6N7-81800-10	110
PH130-0051	99999-03938	110
PH130-0055	67F-81800-01	112
PH130-0055	67F-81800-02	112
PH130-0055	67F-81800-03	112
PH130-0055	67F-81800-04	112
PH130-0056	68F-81800-00	111
PH130-0056	68F-81800-01	111
PH130-0056	68F-81800-03	111
PH130-0056	6C5-81800-00	111
PH130-0056	6CJ-81800-00	111
PH130-0057	68V-81800-00	111
PH130-0057	68V-81800-01	111
PH130-0057	68V-81800-02	111
PH130-0058	688-81800-10	111
PH130-0058	688-81800-11	111
PH130-0058	688-81800-12	111
PH130-0059	61A-81800-00	110
PH130-0059	61A-81800-01	110
PH130-0059	69L-81800-00	110
PH130-0059	69W-81800-00	110
PH130-0061	682-81800-10	110
PH130-0061	682-81800-11	110
PH130-0061	682-81800-12	110
PH130-0061	6L2-81800-10	110
PH130-0061	6L2-81800-11	110
PH130-0061	6L2-81800-12	110
PH130-0062	6F5-81800-10	110
PH130-0062	6F5-81800-11	110
PH130-0062	6G8-818000-10	110
PH130-0062	6G8-818000-11	110
PH130-0062	6J4-81800-00	110
PH130-0062	6J4-81800-01	110
PH130-0063	6H4-81800-10	110
PH130-0063	6H4-81800-11	110
PH130-0063	6H4-81800-12	110
PH130-0073	63P-81800-00	112
PH130-0073	6BR-81800-00	112
PH130-0073	6BR-81800-01	112
PH130-0074	69J-81800-00	112
PH130-0074	69J-81800-01	112
PH130-0076	60V-81800-00	112
PH130-0076	60X-81800-00	112
PH130-0076	6C9-81800-00	112
PH130-0076	6D0-81800-00	112
PH130-0084	66M-81800-00	110
PH130-0084	66M-81800-01	110
PH130-0084	66M-81800-02	110
PH200-T029	6H1-43880-02	122
PH200-T030	6G5-43880-00	123
PH200-T030	6G5-43880-01	123
PH200-T030	6G5-43880-02	123
PH200-T035	62X-43880-00	122
PH200-T035	62X-43880-01	122
PH200-T035	62X-43880-09	122
PH200-T036	62Y-43880-01	122
PH200-T036	62Y-43880-02	122
PH200-T036	69W-43880-00	122
PH200-T036	69W-43880-01	122
PH200-T036	CS3-43880-00	122
PH200-T037	688-43880-11	123
PH200-T037	6E5-43880-00	123
PH200-T037	6E5-43880-01	123

REF	R.O. / OEM	
PH200-T037	6E5-43880-02	123
PH200-T041	6H1-43880-00	122
PH200-T044	67F-43880-00	123
PH200-T045	6C5-43880-00	123
PH200-T045	6C5-43880-01	123
PH200-T048	6H5-43880-00	122
PH200-T048	6H5-43880-01	122
PH200-T048	6H5-43880-02	122
PH200-T048	6H5-43880-09	122
PH200-T050	61A-43880-00	124
PH200-T050	61A-43880-01	124
PH200-T057	67H-43880-00	123
PH200-T057	68W-43880-03	123
PH200-T057	6AE-43880-00	123
PH200-T057	6AE-43880-01	123
PH200-T057	6AE-43880-03	123
PH200-T057	6AE-43880-04	123
PH200-T068	6D8-43880-00	123
PH200-T068	6D8-43880-01	123
PH200-T068	6D8-43880-09	123
PH200-T069	60V-43880-00	123
PH200-T069	69J-43880-00	123
PH200-T069	69J-43880-01	123
PH200-WH01		122
PH375-0034	65W-81941-00	111-114
PH375-0036		110
PH375-0042	68N-81940-00	115
PH375-0042	68V-8194A-00	115
PH375-0047	6E5-81950-01	110-115
PH375-0048	6E5-8195A-01	115
PH375-0048	6E5-8195C-01	115
POWERHEAD2.6	69M-WE0090-01-1S	173
POWERHEAD20-25		193
PRE3300C05	YMM-21005-00-00	130
PRE3300C06	YMM-21006-C8-00	130
PRE3300C07	YMM-21007-C8-00	130
PRE3300C08	YMM-21008-C8-00	130
PRE3300C09	YMM-21009-C8-00	130
PRE3300C10	YMM-21010-C8-00	130
PRE3300C11	YMM-21011-C8-00	130
PRE3300C12	YMM-21012-C8-00	130
PRE3300C13	YMM-21013-C8-00	130
PRE3300C14	YMM-21014-C8-00	130
PRE3300C15	YMM-21015-C8-00	130
PRE3300C16	YMM-21016-C8-00	130
PRE3300C17	YMM-21017-C8-00	130
PRE3300C18	YMM-21018-C8-00	130
PRE3300C19	YMM-21019-C8-00	130
PRE3300C20	YMM-21020-C8-00	130
PRE3300C21	YMM-21021-C8-00	130
PRE3300C22	YMM-21022-C8-00	130
PRE3300C23	YMM-21023-C8-00	130
PRE3300C24	YMM-21024-C8-00	130
PRE3300C25	YMM-21025-C8-00	130
PRE3300C26	YMM-21026-C8-00	130
PRE3300C27	YMM-21027-C8-00	130
PRE3300C28	YMM-21028-C8-00	130
PRE3300C29	YMM-21029-C8-00	130
PRE3300C30	YMM-21030-C8-00	130

R

RAC120R-RAC-01	YMM-2W114-00	79
RAC320R-RAC-01		78
RAC320R-RAC-03		78
RAC490R-RAC-01	YMM-2W227-01	79
RACPFF5510		77
RACRK22628		79
RACS3213		78
RACS3227	YMM-2E227-00	79
RACS3227	YMM-2E227-01	79
RACS3240	YMM-2E114-00	79
REC09168-12017		64-65
REC09401-11425	90465-11M59	213
REC10W30U3	YMD-63050-04	84
REC10W30U6	YMD-63050-01	84
REC10W40U3	YMD-63060-04	84
REC10W40U6	YMD-63060-01	84
REC18-6865	63P-43880-03-00	124
REC18-6865	64E-43880-02-40	124
REC18-6865	68V-43880-03-40	124
REC22-8M0001721		75
REC24942		77
REC24950		78
REC24952		78
REC25000		77
REC25010		77

REF	R.O. / OEM	
REC25020		77
REC25030		77
REC25W40U3		84
REC2TU3	YMD-63021-04	84
REC2TU6	YMD-63021-01	84
REC35-802893Q		77
REC35-802893Q01		77
REC35-80365M	646-24251-01	80
REC35-80365M	646-24251-02	80-82-83
REC35-822626Q15	69J-13440-00	83
REC35-822626Q15	69J-13440-01	83-211-213
REC35-822626Q15	69J-13440-03	83
REC35-822626Q15		71-72-73-83
REC3FV-13440-00	3FV-13440-00	83
REC3FV-13440-00	3FV-13440-10	83
REC3FV-13440-00	3FV-13440-20	83
REC3FV-13440-00	3FV-13440-30	83
REC3FV-13440-00		67-83
REC40135		80
REC40145	65W-24251-00	82
REC40145	65W-24251-10	80
REC40145		65-67-81
REC40155		80
REC40165	67F-24251-02	80-81-82
REC405-A20	6E5-45300-16-8D	375
REC405-A20	6E5-45300-17-8D	280
REC405-A25	6E5-45300-26-8D	375
REC405-A25	6E5-45300-27-8D	280
REC40970		121
REC40990		121
REC416-A20	64D-45300-01-8D	280
REC416-A20	64D-45300-02-8D	379
REC416-A25	64D-45300-21-8D	280
REC416-A25	64D-45300-22-8D	379
REC416-B20	64K-45300-02-NA	281
REC416-B20F	63P-45300-00-8D	278
REC416-B20F	63P-45300-02-8D	327
REC416-B25F	63P-45300-10-8D	278
REC416-B25F	63P-45300-12-8D	327
REC418-A25	64P-45300-10-8D	280
REC418-B25F	64P-45300-10-8D	278
REC418-B25F	64P-45300-12-8D	327
REC421-A20	66K-45300-12-NA	281
REC421-A25	60V-45300-20-8D	281
REC421-B25F	69J-45300-21-8D	279
REC421-B25F	69J-45300-22-8D	331
REC421-B30F		279
REC422-B25F	6P2-45300-20-8D	278-339
REC422-B25F	6P2-45300-21-8D	278-339
REC428-A25	60W-45300-20-8D	281
REC428-B25F	69K-45300-21-8D	279
REC428-B30F	69K-45300-34-8D	279
REC429-B25F	6P3-45300-40-8D	278-339
REC429-B25F	6P3-45300-41-8D	278-339
REC48630-96J03	64E-43820-00	125
REC48630-96J03	64E-43820-08	125
REC48630-96J03	64E-43820-09	125
REC48630-96J03	64E-43820-00	125
REC48630-96J03	64E-43820-08	125
REC48630-96J03	64E-43820-09	125
REC48630-96J03	64E-43821-00	125
REC48630-96J03	64E-43821-08	125
REC48630-96J03	64E-43821-09	125
REC50M-14355-00	50M-14355-00	99
REC5GH-13440-00	5GH-13440-00	83-183-191-197-209
REC5GH-13440-00	5GH-13440-10	207
REC5GH-13440-00	5GH-13440-30	83
REC5GH-13440-00	5GH-13440-70	83
REC5GH-13440-00		65-66-67-68-69-70-71-83
REC5GH-13440-60	5GH-13440-20	195-203
REC5GH-13440-60	5GH-13440-50	83-201-205
REC5GH-13440-60	5GH-13440-60	83-187
REC5GH-13440-60		65-66-67-68-69-83
REC5W40U3		84
REC5W40U6		84
REC60E-81950-00	60E-81950-00	115
REC60H-12416-00	60H-12416-00	245-247
REC60H-12416-00	6G5-12416-00	209-211
REC60V-11181-00	60V-11181-00	249-254
REC60V-12411-00	60V-12411-00	70-137
REC60V-13621-A0	60V-13621-A0	276
REC60V-13645-00	60V-13645-00	276
REC60V-13907-00	60V-13907-00	86
REC60V-24251-01	60V-24251-01	82

REF	R.O. / OEM	
REC60V-44150-00	60V-44150-00	385
REC60V-45113-02	60V-45113-02	253-254
REC60V-45332-00-94	60V-45332-00-94	383
REC60V-45611-00	60V-45611-00	383
REC60V-81950-00	60V-81950-00	115
REC60V-81960-05	60V-81960-00	117
REC60V-81960-05	60V-81960-01	117
REC60V-81960-05	60V-81960-02	117
REC60V-81960-05	60V-81960-03	117
REC60V-81960-05	60V-81960-04	117
REC60V-81960-05	60V-81960-05	117
REC60X-44315-A0	60X-44315-A0	339-386
REC60X-W0078-00	60X-W0078-00	153-157-386
REC61A-11181-A0	69L-11181-00	249-254
REC61A-11193-A2	61A-11193-A2	255
REC61A-11381-A0	61A-11381-A0	276
REC61A-11650-00		261
REC61A-12414-A0	61A-12414-A0	138-231
REC61A-12414-A0	6J8-12414-A0	237
REC61A-13411-00	61A-13411-00	83
REC61A-13621-A0	61A-13621-A0	276
REC61A-13645-00	61A-13645-00	276
REC61A-13646-00	61A-13646-00	276
REC61A-24563-00	61A-24563-00	81-82
REC61A-41134-A0	6D0-41134-00	272
REC61A-44311-00	61A-44311-00	385
REC61A-44311-00	61A-44311-01	325-329-333-339-377-381-386
REC61A-44311-00	6E5-44311-00	148
REC61A-44311-00		155-156-157
REC61A-44322-02	61A-44322-02	155-156-157-325-329-333-339-377-381-386
REC61A-45113-A0	61A-45113-A0	253-254
REC61A-45214-10	61A-45214-10	383
REC61A-45214-10	61A-45214-11	331
REC61A-45215-10	61A-45215-10	383
REC61A-45215-10	61A-45215-11	331
REC61A-45321-01	61A-45321-01	333-385
REC61A-45331-00-94	61A-45331-00-94	333-385-386
REC61A-45376-00-94	61A-45376-00	333-339
REC61A-45376-00-94	61A-45376-00-94	341-385
REC61A-45501-20	61A-45501-20	385
REC61A-45501-30	61A-45501-30	385
REC61A-45527-00	61A-45527-00	325-329-333-377-381-385
REC61A-45538-00	61A-45538-00	325-329-333-377-381-385
REC61A-45567-00/60-0	61A-45567-00	331-337
REC61A-45577-00/60-0	61A-45577-00	331-337
REC61A-45587-00/60-0	61A-45587-00	333-339
REC61A-45587-00/60-0	61A-45587-00/60	385
REC61A-45631-03	61A-45631-03	383
REC61A-45632-00	61A-45632-00	331-337-383
REC61A-45633-00	61A-45633-00	331-337-383
REC61A-45633-00		392
REC61A-45634-01	61A-45634-01	331-337-341-383
REC61A-45635-00	61A-45635-00	331-335-337-341-383
REC61A-45641-02	61A-45641-02	331-337-383
REC61A-81941-00	61A-81941-00	114
REC61A-81941-00	6E5-81941-11	114
REC61A-81941-00		110
REC61A-81950-01	61A-81950-00	115
REC61A-81950-01	61A-81950-01	115
REC61A-81960-04	61A-81960-00	117
REC61A-81960-04	61A-81960-01	117
REC61A-81960-04	61A-81960-02	117
REC61A-81960-04	61A-81960-03	117
REC61A-81960-04	61A-81960-04	117
REC61A-W0001-01	61A-W0001-A1	252-254
REC61A-W0078-A1	61A-W0078-01	153
REC61A-W0078-A1	61A-W0078-A1	328-383
REC61A-W0078-A1	61A-W0078-A3	333
REC61A-W0078-A1		71-72-155-157
REC61A-W0093-01	61A-W0093-01	97
REC61B-82510-02	61B-82510-01	113
REC61N-11181-00	61N-11181-A1	229
REC61N-11181-00	61N-11181-A2	248
REC61N-11181-00		254
REC61N-11515-00	61N-11515-00	229
REC61N-11603-00	61N-11603-00	229-263-266
REC61N-11604-00	61N-11604-00	229-263
REC61N-11605-00	61N-11605-00	229-263
REC61N-11631-00K	61N-11631-00-95	229-263-266
REC61N-11635-00K	61N-11635-00	229-263

REF	R.O. / OEM	
REC61N-11636-00K	61N-1163-00	229
REC61N-11636-00K	61N-11636-00	263
REC61N-14198-00	61N-14198-00	274
REC61N-14301-04		91-93
REC61N-14392-00	62Y-14392-00	93-98
REC61N-24563-10	61N-24563-00	80
REC61N-24563-10	61N-24563-10	80-82
REC61N-24563-10		65-66-68-69-81
REC61N-26311-00	61N-26311-00	129
REC61N-44146-00	61N-44146-00	361
REC61N-44322-00	61N-44322-01	154-155-297-355
REC61N-44323-00	61N-44323-00	149-154-155-297-355
REC61N-45510-00	61N-45510-00	355-388-389
REC61N-45510-10	61N-45510-10	355-388-389
REC61N-45551-00	61N-45551-00	355-388-389
REC61N-45560-10	61N-45560-00	295
REC61N-45560-10	61N-45560-10	355
REC61N-45560-10		388-389
REC61N-45570-00	61N-45571-00	355-388-389
REC61N-85540-00	61N-85540-00	119
REC61N-85570-01	61N-85570-00	105
REC61N-85570-01	61N-85570-01	105
REC61N-W0001-E1	61N-W0001-E1	145-354
REC61N-W0078-11	61N-W0078-10	150
REC61N-W0078-11	61N-W0078-11	150-297-354
REC61N-W0078-11		65-66-154-155
REC61N-W0093-00	61N-W0093-00	93-96-229
REC61T-11193-A0	61T-11193-A1	229-254
REC61T-45113-A0	61T-45113-A0	253
REC61T-45113-A0	689-45113-A1	229
REC61T-45113-A0		254
REC61T-W0001-02	61T-W0001-02	229-250-254-266-267
REC624-14485-00	624-14485-00	221-225-227-231-233-237-239-241-243
REC624-42542-00	90387-06119	98
REC626-14390-90	626-14390-90	98
REC626-44365-01	626-44365-01	349-353
REC626-45316-09	626-45316-09	291-292-349
REC626-45316-09	90381-14020	351
REC62Y-15312-00	62Y-15312-00	271
REC62Y-41133-00	62Y-41113-00	268
REC62Y-45127-00	62Y-45127-00	268
REC62Y-46241-00	62Y-46241-00	207-267
REC62Y-W0001-22	62Y-W0001-20	146
REC62Y-W0001-22	62Y-W0001-21	146
REC62Y-W0001-22	62Y-W0001-22	146-306
REC634-11633-00	634-11633-00	227-260-262
REC63D-11181-A1	63D-11181-A2	237-248-254
REC63D-11193-A0	63D-11193-A0	237-255
REC63D-11603-00	63D-11603-00	237-263
REC63D-11605-00	63D-11605-00	237-263
REC63D-44311-01	63D-44311-00	148-156-309-313
REC63D-44312-00	63D-44312-00	301-305-309-313-317-361
REC63D-44316-00	63D-44316-00	301-305-309-313-361
REC63D-44322-00	63D-44322-00	154-156-301-305-309-313-317-361
REC63D-44323-00	63D-44323-00	305-309-313
REC63D-44323-00	63D-44323-00-00	149
REC63D-44323-00		154-156
REC63D-44341-00	63D-44341-00	301-309-361
REC63D-45114-A0	63D-45114-A0	272
REC63D-45123-00	63D-45123-00	269
REC63D-45361-02-4D	63D-45361-02-4D	299-307-361
REC63D-45361-02-4D	63D-45361-02-8D	303-311
REC63D-45361-02-4D		389-390
REC63D-85540-04	63D-85540-00	118
REC63D-85540-04	63D-85540-01	118
REC63D-85540-04	63D-85540-02	118
REC63D-85540-04	63D-85540-03	118
REC63D-85540-04	63D-85540-04	118
REC63D-W0001-00	63D-W0001-00	237-251-254
REC63D-W0078-01	63D-W0078-01	68-69-151-154-156-306-310
REC63P-11181-00	63P-11181-00	211-215-218
REC63P-11351-01	63P-11351-00	211-218
REC63P-12414-00	63P-12414-00	71-138-211
REC63P-13761-01	63P-13761-00	90
REC63P-13761-01	63P-13761-01	90
REC63P-13906-00	63P-13906-00	89-90
REC63P-13907-03	63P-13907-00	86
REC63P-13907-03	63P-13907-01	86

REF	R.O. / OEM	
REC63P-13907-03	63P-13907-02	86
REC63P-13907-03	63P-13907-03	86
REC63P-13915-00	63P-13915-00	70-71-72-73-82
REC63P-14984-00	63P-14984-00	71-86-88
REC63P-15312-00	63P-15312-00	272
REC63P-41114-A3	63P-41114-A1	211
REC63P-43800-20	63P-4380003	124
REC63P-43800-20	63P-4380004	124
REC63P-43800-20	63P-4380006	124
REC63P-43800-20	63P-4380007	124
REC63P-43800-20	63P-438002D	124
REC63P-43800-20	64E-43880-02-40	124
REC63P-43800-20	68V-43880-03-40	124
REC63P-43880-22	63P-43880-10	124
REC63P-43880-22	63P-43880-11	124
REC63P-43880-22	63P-43880-12	124
REC63P-43880-22	63P-43880-22	124
REC63P-45501-00	63P-45501-00	329-333
REC63P-45501-10	63P-45501-10	329-333
REC63P-45551-00	63P-45551-00	327
REC63P-46241-00	63P-46241-00	211-267
REC63P-81950-00	63P-81950-00	115
REC63P-81960-02	63P-81960-00	116
REC63P-81960-02	63P-81960-01	116
REC63P-81960-02	63P-81960-02	116
REC63P-82380-00	63P-82380-00	90-102
REC63V-11181-A1	63V-11181-A1	248
REC63V-11181-A1	63V-11181-A2	227
REC63V-11181-A1		254
REC63V-11412-00	63V-11412-00	227-256
REC63V-11422-00	63V-11422-00	227-256
REC63V-11432-00	63V-11432-00	227-256
REC63V-11442-00	63V-11442-00	227-256
REC63V-11445-00	63V-11445-00	227
REC63V-11515-02	63V-11515-02	227
REC63V-14126-00	63V-14126-00	94
REC63V-14301-00		93
REC63V-14984-00	63V-14984-00	94
REC63V-14985-00	63V-14985-00	93-100
REC63V-15396-01-CA	63V-15396-01-CA	227
REC63V-24411-00	63V-24411-00	87
REC63V-41111-00-1S	63V-41111-00-1S	227
REC63V-41112-A0	63V-41112-A0	140-227
REC63V-41113-00-1S	63V-41113-00-1S	227
REC63V-41133-A1	63V-41133-A1	268
REC63V-44301-00	63V-44301-00	289-291-351
REC63V-44301-00	63V-44301-00-00	147
REC63V-44301-00		154-155
REC63V-44322-00	63V-44322-00	154-155-289-291-293-351
REC63V-44323-00	63V-44323-00	291-351
REC63V-44323-00	63V-44323-00-00	149
REC63V-44323-00		154-155
REC63V-44352-01	63V-44352-01	143-154-155-291-293-351
REC63V-44361-01	63V-44361-01	351
REC63V-44361-11	63V-44361-11	351
REC63V-44514-01-CA	63V-44514-01-CA	135
REC63V-45113-A1	63V-45113-A1	227
REC63V-45113-A1	63V-45113-A1	252
REC63V-45113-A1		254
REC63V-45300-03-8D	63V-45300-00-4D	279
REC63V-45300-03-8D	63V-45300-03-4D	279
REC63V-45300-03-8D	63V-45300-03-8D	279
REC63V-45300-13-8D	63V-45300-10-4D	279
REC63V-45300-13-8D	63V-45300-13-4D	279
REC63V-45300-13-8D	63V-45300-13-8D	279
REC63V-45315-A0	63V-45315-A0	291-351
REC63V-45331-00-5B	63V-45331-00-5B	291-351
REC63V-45501-10	63V-45510-11	291-387-388
REC63V-45510-01	63V-45510-01	351-387-388
REC63V-45510-11	63V-45510-11	351-387-388
REC63V-45551-00	63V-45551-00	291-351
REC63V-45551-00	63V-455551-00	293
REC63V-45551-00		387-388
REC63V-85520-00	63V-85520-00	106
REC63V-85533-00	63V-85533-00	104
REC63V-85540-00-01	63V-85540-00	118-119
REC63V-85540-00-01	63V-85540-01	118-119
REC63V-85540-00-01	63V-85540-02	118
REC63V-85570-00	63V-85570-00	105
REC63V-85570-00	65E-85570-00	105
REC63V-85580-01	63V-85580-01	107
REC63V-W0001-00	63V-W0001-00	226
REC63V-W0001-00	63V-W0001-01	249
REC63V-W0001-00		254

REF	R.O. / OEM	
REC63V-W0001-21	63V-W0001-21	144
REC63V-W0078-01	63V-W0078-00	150
REC63V-W0078-01	63V-W0078-01	290-350
REC63V-W0078-01		65-154-155
REC63V-W0093-00	63V-W0093-00	93-95-226
REC63W-13610-00	63W-13610-00	92-99
REC646-11633-00	646-11633-00	220
REC646-11651-02	646-11651-02	220-260
REC646-11681-00	646-11681-00	220-260
REC646-14623-A1	646-14623-A1	220-254-270
REC646-44322-00	646-44322-00	343
REC646-44322-00	646-44323-00	343
REC646-44323-00	646-44323-00	148-155
REC646-44352-01	646-44352-01	143-155-343
REC646-44365-00	646-44365-00	343
REC646-44366-01	646-44366-01	343
REC646-45551-00	646-45551-00	343-387
REC646-45560-00	646-45560-00	343-387
REC647-11610-00	647-11610-00	225-262-266
REC647-11610-10	647-11610-10	225
REC647-11610-20	647-11610-20	225
REC647-14323-00	647-14323-00	98
REC647-14385-00	647-14385-00	100
REC647-14386-10	647-14386-10	99
REC647-44366-00	647-44366-00	154-155-291-346-347-351
REC647-45316-09	647-45316-09	347
REC647-45551-00	647-45551-00	347-387
REC647-45560-00	647-45560-00	347-387
REC647-45570-00	647-45570-01	347-387
REC647-45616-02	6L5-45616-02	345
REC648-11633-00	648-11633-00	237-260-261-263-264
REC648-11651-00		260-261
REC648-11681-00		260
REC648-13621-A0	648-13621-A1	273
REC648-13645-A0	648-13645-A0	273
REC648-14198-A0	648-14198-A0	274
REC648-14384-01-00	648-14384-01	94
REC648-14385-00	648-14385-00	100
REC648-24411-00	648-24411-00	87
REC648-24434-01	648-24434-01	88
REC648-24435-02	648-24435-02	88
REC648-44146-00	648-44146-00	134
REC648-45633-00	648-45633-00	291-295-349-351-353-355-357
REC648-45633-00	648-45633-11	293
REC648-45633-00		387-388-389
REC648-45635-00	648-45635-00	295-353-355
REC64D-11603-01	64D-11603-01	245
REC64D-11603-01	64D-11603-02	247-265
REC64D-11603-01		266-267
REC64D-11604-01	64D-11603-04	265
REC64D-11604-01	64D-11604-01	245-247
REC64D-11604-01	64D-11604-02	247
REC64D-11605-01	64D-11603-05	265
REC64D-11605-01	64D-11605-01	245
REC64D-11605-01	64D-11605-02	247
REC64D-11631-00K	64D-11631-02-90	247-265-267
REC64D-11642-00K	64D-11642-02-90	247-265-267
REC64D-14384-1	64D-14384-01	94
REC64D-14394-00	64D-14394-00	99
REC64D-W0093-00	64D-W0093-00	97-247
REC64E-13645-A0	64E-13645-A0	276
REC64E-43821-05	64E-43821-00	125
REC64E-43822-00	64E-43822-00	125
REC64E-4384J-00	64E-4384J-00	125
REC64J-24560-10	64J-24560-00	80
REC64J-24560-10	64J-24560-10	80
REC64J-W0001-20	64J-W0001-20	145
REC64J-W0001-20	69J-W0001-20	146-333
REC64J-W0001-21	64J-W0001-21	146-333
REC650-11370-00	650-11370-00	231
REC650-11370-00	650-11370-01	225-235-237-239-241-243
REC650-11651-04	650-11651-00	227-260
REC650-14485-03	650-14485-03	227
REC650-24351-51	650-24351-00	76
REC650-24351-51	650-24351-01	76
REC650-24351-51	650-24351-50	76
REC650-24351-51	650-24351-51	76
REC650-24431-A0	650-24431-A0	88
REC650-44147-00	650-44147-00	134-363-367
REC650-45635-00	650-45635-00	291-293-349-351
REC655-12414-A1	655-12414-A1	138-229
REC65L-13645-00	65L-13645-00	275

REF	R.O. / OEM	
REC65L-13646-00	65L-13646-00	275
REC65L-13915-00	665L-13915-00	82
REC65L-24563-00	65L-24563-00	71-72-81-82
REC65N-45321-00	65N-45321-00	335
REC65N-W0078-A1	65N-W0078-A1	152-157
REC65W-46241-00	65W-46241-00	193-199-267
REC65W-82575-01	65W-82575-01	120
REC65W-W0001-00	65W-W0001-00	217
REC65W-W0001-00	65W-W0001-02	190
REC65W-W0001-00		218
REC65W-W0001-20	65W-W0001-20	145-297
REC662-44352-01	662-44352-01	143-347
REC663-11193-00	663-11193-A0	239-255
REC663-11411-00	663-11411-01	239-256
REC663-11561-00	663-11561-00	239
REC663-11633-00	663-11633-00	239-243-260-261-264
REC663-11634-00	633-11634-00	233-263
REC663-11634-00	663-11634-00	235-263
REC663-12414-00	663-12414-A0	138-239
REC663-12416-00	663-12416-00	235-239
REC663-13621-00	663-13621-A0	275
REC663-14198-00	663-14198-A0	275
REC663-14483-A0	663-14483-A0	275
REC663-14548-00	663-14548-00	99
REC663-14923-00	663-14923-00	99
REC663-24411-00	663-24411-00	87
REC663-41114-00	663-41114-A0	142-239
REC663-42138-00	663-42138-00	129
REC663-43118-01-4D	663-43118-01-4D	134
REC663-44144-01	663-44144-01	369-371
REC663-44151-00	663-44151-00	369-371
REC663-44311-02	663-44311-02	359-369
REC663-44311-02	663-44311-02-00	147
REC663-44311-02	663-44341-00	369
REC663-44311-02	6J8-44311-00	357
REC663-44311-02		155-156
REC663-44315-A0	663-44315-A0	155-156, 357-359-369
REC663-44316-A0	663-44316-A0	357-359-369
REC663-44322-00	663-44322-00	154-155-156-357-359-369
REC663-44323-00	663-44323-00	149-155-156-357-359-369
REC663-44324-00	663-44324-A0	357-359-369
REC663-44366-00	663-44366-00	301-305-309-313-317-321-333-357-359-361-363-367-369-371-373-385
REC663-44366-00		154-155-156
REC663-44551-02-8D	663-44551-02-8D	135
REC663-45123-00	663-45123-00	268
REC663-45331-00-94	663-45331-00-94	369-390
REC663-45375-00	663-45375-00	367
REC663-45376-00	663-45376-00	305-325-335-367
REC663-45376-00	663-45376-00-94	301-309-313-317-321-329
REC663-45510-01	663-45510-01	369-390
REC663-45552-00	663-45552-00	359-365-369
REC663-45576-00	663-455576-00	365
REC663-45631-00	663-45631-01	359-363-365-369-389-390
REC663-45633-00	663-45633-00	359-361-363-365-369-389-390
REC663-45634-00	663-45634-00	303-307-311-359-363-365-369
REC663-45987-00	663-45987-00	365
REC663-45987-00	663-45987-02	299-303-307-311-359-361-369
REC663-45987-00		405
REC663-48344-00	663-48344-00	127
REC663-85518-00	633-85518-00	132
REC663-85540-15	663-85540-11	119
REC663-85540-15	663-85540-15	119
REC663-W0078-01	663-W0078-00	368
REC663-W0078-01	663-W0078-01	152-368
REC663-W0078-01	663-W0078-A0	151
REC663-W0078-01		156
REC664-41114-A0	664-41114-A0	140
REC664-41134-A0	664-41134-A0	268
REC664-44338-00	63V-44338-00	351
REC664-44338-00	664-44338-00	289-291-293-353
REC664-44338-00		154-155
REC664-45384-00	664-45384-00	353-357
REC664-45631-00	664-45631-02	355-388-389
REC664-45631-01	664-45631-01	353
REC664-45987-00	664-45987-00	353

REF	R.O. / OEM	
REC66K-13907-00		86
REC66K-13915-00	66K-13915-00	82
REC66K-14984-00	66K-14984-00	86-88
REC66K-45501-00	66K-45501-00	385
REC66M-46241-00	66M-46241-00	185-267
REC66M-W0001-01	66M-W0001-01	182-216-218
REC66M-W0001-20	66M-W0001-20	144-290
REC66M-W0093-01	66M-W0093-01	95-182
REC66N-11603-00	66N-11603-00	183-219
REC66T-11181-00	66T-11181-A0	249
REC66T-11181-00	66T-11181-A2	233
REC66T-11181-00		254
REC66T-11193-A0	66T-11193-A0	233-255
REC66T-11412-00	66T-11412-00	233-256
REC66T-11422-00	66T-11422-00	233-256
REC66T-11432-00	66T-11432-00	233-256
REC66T-11442-00	66T-11442-00	233-256
REC66T-11603-00	66T-11603-00	233-263-266
REC66T-11604-00	66T-11604-00	233-263
REC66T-11605-00	66T-11605-00	233-263
REC66T-11631-01K	66T-11631-01-93	233-263-266
REC66T-11635-01K	66T-11635-01	233-263
REC66T-11636-01K	66T-11636-01	233-263
REC66T-11681-00	66T-11681-00	233-260-261
REC66T-14301-60		92-93
REC66T-14384-01	66T-14384-01	94
REC66T-14536-01	66T-14536-01	94
REC66T-14992-00	66T-14992-00	99
REC66T-15713-00	66T-15713-00	112
REC66T-15713-00	6F5-15713-00	112
REC66T-15713-00	6F5-15713-01	112
REC66T-26301-00	66T-26301-00	129
REC66T-41114-A0	667-41114-A0	233
REC66T-41114-A0	66T-41114-A0	141
REC66T-41133-A1	66T-41133-A0	269
REC66T-44323-00	66T-44323-00	149-154-301-361
REC66T-44514-00-4D	66T-44514-00-4D	135
REC66T-45113-A0	66T-45113-A0	253
REC66T-45113-A0	66T-45113-A00	233
REC66T-45113-A0		254
REC66T-45114-A0	66T-45114-A0	271
REC66T-45501-01	66T-45501-01	361-389
REC66T-45501-10	66T-45501-11	361-389-390
REC66T-45551-00	667-45551-00	303
REC66T-45551-00	66T-45551-00	299-361
REC66T-45551-00		389-390
REC66T-45560-00	66T-45560-01	299-303-361-389-390
REC66T-45571-00	667-45571-00	303
REC66T-45571-00	66T-45571-00	299-361
REC66T-45571-00		389-390
REC66T-45611-00	66T-45611-00	299-361-389-390
REC66T-45631-00	66T-45631-00	299-361-389-390
REC66T-45635-00	66T-45635-00	299-361
REC66T-45997-00	667-45997-00	303-307-311
REC66T-45997-00	66T-45997-00	299-361-365
REC66T-45997-00		405
REC66T-82575-01	66T-82575-01	120
REC66T-85520-00		106
REC66T-85533-00	66T-85533-00	104
REC66T-85540-00-01	66T-85540-01	119
REC66T-85570-00	66T-85570-00	105
REC66T-85580-00	66T-85580-00	107
REC66T-W0001-01	66T-W0001-01	233-250-254
REC66T-W0001-20	66T-W0001-20	146-361
REC66T-W0078-00	66T-W0078-00	298-361
REC66T-W0078-00	66T-W0078-01	152
REC66T-W0078-00		66-67-154
REC66T-W0093-01	66T-W0093-01	93-96-233
REC670-44514-00	670-44514-00	135
REC670-44555-00-94	62Y-44555-00	135
REC670-45997-00	670-45997-02	359-369
REC676-11181-01	676-11181-A2	249-254
REC676-12414-A0	676-12414-A0	233
REC676-12414-A0	676-12414-A1	138
REC676-13646-A0	676-13646-A0	274
REC676-14186-00	676-14186-00	99
REC676-14966-00	679-14966-00	100
REC676-14984-00-00	676-14984-00	94
REC676-14985-01	676-14985-01	100
REC676-41112-A0	676-41112-A0	142
REC676-41133-A0	676-41133-A0	269
REC676-43160-02	676-43160-00	132
REC676-43160-02	676-43160-01	132
REC676-43160-02	676-43160-02	132

REF	R.O. / OEM	
REC676-44311-00	676-44311-00	148-156-363-367
REC676-44315-00	676-44315-A0	367
REC676-44315-00	676-44315-A1	363
REC676-44315-00		156
REC676-44316-A1	676-44316-A1	363
REC676-44322-00	676-44322-00	156-367
REC676-44323-00-40	676-44323-00	149-156-367-363
REC676-44324-A0	676-44324-A0	367
REC676-44324-A0	676-44324-A1	363
REC676-44341-00	676-44341-94	363
REC676-44361-00	676-44361-00	367
REC676-44361-10	676-44361-10	367
REC676-44518-00	676-44518-00	135
REC676-45114-A1	676-45114-A1	271
REC676-45127-00	676-45127-00	269
REC676-45128-00	676-45128-00	269
REC676-45314-00	676-45314-00	363
REC676-45361-00	676-45361-01-94	363-390
REC676-45501-10	676-45501-10	363-389-390
REC676-45533-00	676-45533-00	363
REC676-45587-00	676-45587-00-70	363
REC676-45587-00-75	676-45587-00-75	363
REC676-45587-00-80	676-45587-00-80	363
REC676-45635-00	676-45635-00	359-363-365
REC677-11181-A0	677-11181-A1	225-248-254
REC677-11412-02	677-11412-02	225-256
REC677-11422-02	677-11422-02	225-256
REC677-11432-02	677-11432-02	225-256
REC677-11442-02	677-11442-02	225-256
REC677-11631-00K	677-11631-00-97	225-262-266
REC677-11635-00K	677-11635-00	225-262
REC677-11636-00K	677-11636-00	225-262
REC677-11651-00		260
REC677-13621-00	677-13621-A1	273
REC677-14198-A1	677-14198-A1	273
REC677-14227-00	677-14227-01	94
REC677-14343-68	677-14343-68	98
REC677-14384-01	677-14384-01	94
REC677-24434-02	677-24434-02	273
REC677-24435-01	677-24435-01	87
REC677-24471-01	677-24471-01	87
REC677-26301-02	677-26301-02	129
REC677-41112-A0	677-41112-A1	225
REC677-41112-A0	677-41114-A0	140
REC677-41112-A0	677-41114-A1	225
REC677-41112-A0		389
REC677-45113-A0	677-45113-A0	225-252-254
REC677-W0093-00	677-W0093-00	95
REC677-W0093-00	677-W0093-00	225
REC679-14923-00	679-14923-00	99
REC679-44150-00	679-44150-00	367
REC679-44150-10	679-44150-10	367
REC679-44152-00	679-44152-00	367
REC679-44316-A0	679-44316-A0	367
REC679-44341-00	679-44341-00-94	367
REC679-44514-00-94	679-44514-00-94	135
REC679-45315-A1	679-45315-A1	365
REC679-45321-02	679-45321-02	365
REC679-45331-00	679-45331-00-94	365
REC679-45501-10	679-45501-10	367-389
REC679-45536-00	679-45536-00	367
REC679-45560-00	679-145560-00	365-389
REC679-45571-00	679-45571-00	365
REC679-45611-00	679-45611-01	359-365-389-390
REC679-W0078-A1	679-W0078-00	151-156
REC67C-11181-01	67C-11181-01	197-215-218
REC67C-11351-00	67C-11351-01	197-207-218
REC67C-11356-00	67C-11356-00	197
REC67C-11603-00	67C-11603-00	193-195-199-201-203-205-219
REC67C-15312-00	67C-15312-00	271
REC67C-41114-00	67C-41114-00	141
REC67C-41114-00	67C-41114-10	197
REC67C-41133-00	67C-41133-00	268
REC67C-43880-01	67C-43880-00	122
REC67C-43880-01	67C-43880-01	122
REC67C-45113-00	67C-45113-00	271
REC67C-45123-00	67C-45123-00	268
REC67C-45501-00	67C-45501-00	301-305-389-390
REC67C-45501-10	67C-45501-10	301-305-389-390
REC67C-W0001-01	67C-W0001-00	217
REC67C-W0001-01	67C-W0001-01	197-217
REC67C-W0001-01		218

REF	R.O. / OEM	
REC67C-W0001-20	67C-W0001-20	298
REC67D-W0093-00	67D-W0093-00	95-177
REC67F-11181-03	67F-11181-02	209
REC67F-11181-03	67F-11181-03	215
REC67F-11181-03		218
REC67F-11328-00	67F-11328-00	209-211-214
REC67F-11416-00	67F11416-00	209
REC67F-11416-10	67F11416-10	209
REC67F-11416-20	67F11416-20	209
REC67F-12411-01	67F-12411-00	137
REC67F-12411-01	67F-12411-01	137-209-211-213
REC67F-12411-01		69-70-71-72-73-137
REC67F-14371-01	67F-14371-01	101
REC67F-41114-A2	6D8-41114-A0	209
REC67F-41134-A0	67F-41134-A0	269
REC67F-41138-00	67F-41138-00	269
REC67F-44311-01	67F-44311-00	321
REC67F-44311-01	67F-44311-01-00	148-154-155
REC67F-44322-00	67F-44322-00	321-154-155
REC67F-44323-00	667F-44323-00	149
REC67F-44323-00	67F-44323-00	321-154-155
REC67F-44352-00	67F-44352-00	143-321-154-155
REC67F-45113-00	67F-45113-00	272
REC67F-45123-00	67F-45123-00	269
REC67F-45127-00	67F-45127-00	269
REC67F-45331-00-CA	67F-45331-00-94	319
REC67F-45501-10	67F-45501-10	321-391
REC67F-45560-00	67F-45560-00	319-390-391
REC67F-45570-00		391
REC67F-45576-00	67F-45576-00	315-319
REC67F-45611-01	67F-45611-01	315-319-391
REC67F-45997-00	67F-45997-00	315-319-371-405
REC67F-46241-00	67F-46241-00	209-267
REC67F-81960-12	67F-81960-00	116
REC67F-85570-00	67F-85570-00	105
REC67F-W0001-00	67F-W0001-00	217
REC67F-W0001-00	67F-W0001-01	209
REC67F-W0001-00		218
REC67F-W0001-20	67F-W0001-20	145-318
REC67F-W0078-00	67F-W0078-00	69-70-152-154-155-318
REC67F-W0093-00	67F-W0093-00	97-209
REC67H-11411-00		256
REC67H-13907-00	67H-13907-00	86
REC67H-8592A-01	67H-8592A-01	103
REC682-11351-A0	682-11351-A0	252
REC682-11412-00		256
REC682-11422-00		256
REC682-11432-00		256
REC682-11442-00		256
REC682-11610-01	682-11610-00	262
REC682-11610-01	682-11610-01	227
REC682-11610-01		266
REC682-11610-11	682-11610-11	227-262
REC682-11610-21	682-11610-21	227-262
REC682-11681-00	682-11681-00	227-260
REC682-12413-00-1S	682-12413-00-1S	139-227
REC682-12413-00-1S	682-12413-00-9M	139
REC682-12414-A1	682-12414-A1	138-139-227
REC682-13621-00	682-13621-A0	273
REC682-41112-00	682-41112-A1	140
REC682-41114-00	682-41114-A1	140
REC682-41133-A0	682-41133-A0	268
REC682-41237-00	682-42137-00	132
REC682-41237-50	682-41237-50	132
REC682-44147-00	682-44147-00	349-357
REC682-44176-00	682-44176-00	349
REC682-44312-00	682-44312-00	349
REC682-44315-00	682-44315-00	154-155-156-349
REC682-44322-00	682-44322-00	154-155-156-349
REC682-44323-40	682-44323-00	154-155-156-349
REC682-44328-00	682-44328-00	349
REC682-44352-01	682-44352-00	349
REC682-44352-01	682-44352-03	143
REC682-44352-01		154-155-156
REC682-44361-01	682-44361-01	349
REC682-44361-10	682-44361-10	349
REC682-44365-00	682-44365-00	154-155-156-349
REC682-44514-01-94	682-44514-01-94	135
REC682-45113-A0	682-45113-02	254-271
REC682-45376-01	682-45376-01	349
REC682-45631-00	682-45631-00	291-293-349-351-387-388

REF	R.O. / OEM	
REC682-W0078-A1	682-W0078-A1	150-154-155-156-348
REC683-44362-01	683-44361-01	349
REC683-44365-01	683-44365-01	349
REC683-44373-00	683-44373-00	349
REC683-45315-A0	683-45315-00	349
REC683-45361-01-4D	683-45361-00-EJ	349
REC683-45361-01-4D	683-45361-02-4D	291-351
REC683-45361-01-4D	683-45361-02-8D	293
REC683-45361-02-4D		387-388
REC683-45611-00	683-45611-00	291-293-349-351-387-388
REC683-W0001-21	683-W0001-21	348
REC683-W0001-21	683-W0001-C1	144
REC688-11111-02-1S	688-11111-02-1S	243
REC688-11181-A1	688-11181-A1	243
REC688-11181-A1	688-11181-A2	249
REC688-11181-A1		254
REC688-11193-A1	688-11193-A1	243-255
REC688-11370-00	688-11370-01	237-241-243
REC688-11411-00	688-11411-01	243-256
REC688-11603-A0	688-11603-A0	239-243-264-266
REC688-11605-A0	688-11605-A0	239-243-264
REC688-11610-02	688-11610-02	264-266
REC688-11631-02K	688-11631-02-95	264-266
REC688-11631-03K	688-11631-03-94	239-243-264
REC688-11631-81K	688-11631-81-96	264-266
REC688-11634-00	688-11634-00	229-239-243-263-264
REC688-11634-00	688-11634-10	241
REC688-11635-03K	688-11635-03	239-264
REC688-11636-03K	688-11635-03	264
REC688-11636-03K	688-11636-03	239
REC688-11650-03	688-11650-03	239-243-264
REC688-11651-00		261
REC688-12413-00-1S	688-12413-00-1S	139-243
REC688-12414-A1	688-12414-A1	138-139-243-245-247
REC688-12416-00	688-12416-00	139-243
REC688-13610-00	688-13610-00	99
REC688-13621-A1	688-13621-A1	274
REC688-14198-A1	688-14198-A2	274
REC688-14416-01	688-14416-01	274
REC688-14483-A0	688-14483-A0	274
REC688-14548-00	688-14548-00	99
REC688-14947-00	688-14947-00	98
REC688-41112-A0	688-41112-A0	142-243
REC688-41114-A0	688-41114-A0	142-243
REC688-41134-00	688-41134-A0	269
REC688-41211-01	688-41211-00	132
REC688-41211-01	688-41211-01	132
REC688-41217-00	688-41217-00	101
REC688-43160-01	688-43160-01	132
REC688-44120-12	688-44120-11	134
REC688-44120-12	688-44120-12	134
REC688-44120-22	688-44120-22	134
REC688-44311-01	688-44311-01	148-371
REC688-44311-01		156
REC688-44311-01	688-44311-01-00	373
REC688-44315-00	688-44315-A0	321-371
REC688-44315-00		154-155-156
REC688-44315-00	688-44315-A0-00	373
REC688-44316-00	688-44316-00	321
REC688-44316-00	688-44316-A0	371
REC688-44316-00	688-44316-A0-00	373
REC688-44322-00	688-44322-00	371
REC688-44322-00		156
REC688-44322-00	688-44322-00-00	373
REC688-44323-00	688-44323-00-00	149
REC688-44323-00	688-44323-00-00	373
REC688-44323-00	688-44323-40	371
REC688-44323-00		156
REC688-44324-00	688-44324-A0	321-371
REC688-44324-00	688-44324-A0-00	373
REC688-44341-01	688-44341-01-94	371
REC688-44341-01	6D8-44341-01	321
REC688-44341-01	688-44341-01-94	373
REC688-44352-03	688-44352-03	143-156-371
REC688-44352-03	688-44352-03-00	373
REC688-44361-10	688-44361-10	371
REC688-44514-00	688-44514-00	135
REC688-44555-00	688-44555-00	135
REC688-45113-A0	688-45113-A0	243-253-254
REC688-45114-A1	688-45114-A1	272
REC688-45123-00	688-45123-00	269
REC688-45214-02	688-45214-02	323-365
REC688-45215-02	688-45215-02	323-365

REF	R.O. / OEM	
REC688-45331-00-94	688-45331-00-94	371
REC688-45331-00-94		388-390-391
REC688-45331-00-94	688-45331-00-94	373
REC688-45341-00	688-45341-00	295-359-375
REC688-45341-00	688-45341-00-00	373
REC688-45341-00	688-45341-10	299-303-307-311-315-319-323-327-331-335-337-341-355-361-363-369-370-379
REC688-45375-00	63D-45375-00	317-321-325
REC688-45375-00	688-45375-00	329-371
REC688-45383-01	688-45383-02	315-319-323-371-375
REC688-45383-01	688-45383-02-00	373
REC688-45384-00	688-45384-00	371-375
REC688-45384-00	688-45384-02	315-319-323
REC688-45384-00	688-45384-00-00	373
REC688-45501-10		390-391
REC688-45501-11	688-45501-11	371-390-391
REC688-45536-01	688-45536-01	317-321
REC688-45551-00	688-45551-01	371-390-391
REC688-45551-00	688-45551-01-00	373
REC688-45560-00	688-45560-00	371
REC688-45560-00		390-391
REC688-45560-00	688-45560-00-00	373
REC688-45570-00	688-45571-01	371
REC688-45571-00-00		390-391
REC688-45611-00	688-45611-00	371-390-391
REC688-45631-00	688-45631-01	371-390-391
REC688-45633-00	688-45633-00	315-319-371
REC688-45633-00	688-45633-00-00	373
REC688-45633-00		390-391
REC688-45634-00	688-45634-00	371
REC688-45635-00	688-45635-00	369-371
REC688-45987-00	688-45987-01	315-319-371-405
REC688-45987-00	688-45987-01-00	373
REC688-45997-00	688-45997-00	383
REC688-45997-00	688-45997-01	323-327-331-335-337-375-379-405
REC688-45997-00	688-45997-01-00	373
REC688-81950-10	688-81950-10	111-114
REC688-82560-10	688-82560-10	103
REC688-82575-01	688-82575-01	120
REC688-8258A	688-8258A-10	128
REC688-8258A-30	688-8258A-30	128
REC688-85510-01	688-85510-00	121
REC688-85510-01	688-85510-01	121
REC688-85510-10	688-85510-10	121
REC688-85510-10	688-85510-11	121
REC688-85540-00	688-85540-00	117
REC688-85540-16	688-85540-16	120
REC688-W0001-20	688-W0001-20	146
REC688-W0001-22	688-W0001-20-00	373
REC688-W0001-22	688-W0001-22	146-370
REC688-W0001-A0	688-W0001-02	243
REC688-W0001-A0	688-W0001-A0	251
REC688-W0001-A0		254
REC689-11181-00	689-11181-A2	248-254
REC689-11610-00	689-11610-01	263-266
REC689-11631-00K	689-11631-00-95	263-266
REC689-11633-00	689-11633-00	229-260-263
REC689-11651-00	689-11651-00	229-260-261
REC689-11681-00	689-11681-01	229-260-261
REC689-15396-01-CA	689-15396-01-5B	229
REC689-15755-00	689-15755-00	134
REC689-41112-A0	689-41112-A0	141
REC689-41114-A0	689-41114-A0	141
REC689-44311-00	689-44311-03	147-155-353
REC689-44315-A0	689-44315-A0	353
REC689-44316-A0	689-44316-A0	353
REC689-44323-00	689-44323-03	155-353
REC689-44324-A0	689-44324-A0	155-353
REC689-44352-02	689-44352-02	143-155-353
REC689-44366-00	689-44366-00	155-353-355
REC689-45501-10	689-45501-10	353-388-389
REC689-45551-00	689-45551-00	353-388-389
REC689-45560-00	689-45560-00	353-388-389
REC689-45571-00-00	689-45570-00	353-388-389
REC689-45611-00	689-45611-00	353-388-389
REC689-45997-00	689-45997-00	295-353-355-357-405
REC689-81311-40	66M-85570-00	105
REC689-85540-21	689-85540-20	119
REC689-85540-21	689-85540-21	119
REC689-W0001-20	689-W0001-20	145

REF	R.O. / OEM	
REC689-W0001-21	689-W0001-21	145-353
REC689-W0001-C2	6689-W0001-C2	145
REC689-W0078-04	689-W0078-04	151-155
REC689-W0078-A6	689-W0078-A6	151-155-353
REC689-W0093-02	689-W0093-02	95
REC689-W4432-01	689-W4432-02	155-156-353
REC68D-E1603-00	68D-E1603-00	175-219
REC68F-11181-00	68F-11181-00	249-254
REC68F-11193-02	68F-11193-02	255
REC68F-11381-00	68F-11381-00	276
REC68F-13440-00	68F-13440-00	83
REC68F-13907-01	68F-13907-01	86
REC68F-13915-00	68F-13915-00	82
REC68F-24563-00	68F-24563-00	81
REC68F-24563-10	68F-24563-10	81
REC68F-41114-00	68F-41114-00	142
REC68F-45113-01	68F-45113-01	253-254
REC68F-83688-00	68F-83688-00	90-102
REC68F-83688-10	68F-83688-10	90-102
REC68F-8592A-00	68F-8592A-00	103
REC68F-W0001-01	68F-W0001-01	252-254
REC68T-13475-00	68T-13475-00	271
REC68T-24251-00	68T-24251-00	80-82
REC68T-24251-00	68T-24251-01	80
REC68T-24251-00	6EE-F4251-00	80
REC68T-24251-00		64-65-81
REC68T-24410-00-00	68T-24410-00	85
REC68T-24410-00-00	68T-24410-01	85
REC68T-44323-00	68T-44323-00	149-154-289-293
REC68T-44352-00	68T-44352-00	143-154-289
REC68T-44366-00	68T-44366-00	154-289
REC68T-45551-00	6N0-G5551-A0	289
REC68T-46241-00	60R-G6241-00	180
REC68T-46241-00	68T-46241-00	267
REC68T-85540-00	68T-85540-00	118
REC68T-W0001-20	68T-W0001-20	144-289
REC68T-W0078-00	68T-W0078-00	150-289
REC68T-W0078-00	68T-W0078-01	150
REC68T-W0078-00		64-65-154
REC68V-11351-00	68V-11351-00	209-218
REC68V-12111-00	68V-12111-00	209
REC68V-13761-10		90
REC68V-13907-00	68V-13907-00	86
REC68V-13907-00	68V-13907-01	86
REC68V-13907-00	68V-13907-02	86
REC68V-13907-00	68V-13907-03	86
REC68V-13907-00	68V-13907-04	86
REC68V-13915-00	68V-13915-00	72-82
REC68V-14984-00	68V-14984-00	72-86-88
REC68V-15312-00	68V-15312-00	272
REC68V-24410-00	68V-24410-00	85
REC68V-24563-00	68V-24563-00	68-80-81-82
REC68V-44323-00	6EK-44323-00	149-155-269-325
REC68V-45501-10	68V-45501-10	325
REC68V-81950-00	68V-81950-00	115
REC68V-82380-00	68V-82380-00	90-102
REC68V-85885-00	68V-85885-00	90-102
REC68V-8A360-00	68V-13761-00	89
REC68V-8A360-00	68V-8A360-00	89
REC68V-8A360-00		90
REC68V-W0001-20	68V-W0001-20	147-322
REC68V-W0078-00	68V-W0078-00	70-71-152-155-322
REC692-14590-01	692-14590-00	98
REC692-14590-01	692-14590-01	98
REC692-14923-00	692-14923-00	98
REC692-24410-00	692-24410-00	85
REC692-24410-00	6A0-24410-00	85
REC692-24410-00	6A0-24410-03	85
REC692-24410-00	6A0-24410-04	85
REC692-24410-00	6A0-24410-05	85
REC692-24411-00	692-24411-00	87
REC692-26301-03	692-26301-00	129
REC692-26301-03	692-26301-01	129
REC692-26301-03	692-26301-02	129
REC692-26301-03	692-26301-03	129
REC692-41256-00	692-41256-00	101
REC692-44120-22	692-44120-21	134
REC692-44120-22	692-44120-22	134
REC692-45300-16-8D	692-45300-12-4D	280
REC692-45300-16-8D	692-45300-13-4D	280
REC692-45300-16-8D	692-45300-14-4D	280-370
REC692-W0078-02	692-W0078-00-00	373
REC692-W0078-02	692-W0078-01-00	373
REC692-W0078-02	692-W0078-00	152

REF	R.O. / OEM	
REC692-W0078-02	692-W0078-01	152
REC692-W0078-02	692-W0078-02	152-370
REC692-W0078-02		156
REC695-11181-00	695-11181-A1	248-254
REC695-85540-11	695-85540-11	119
REC695-85540-11	695-85540-12	119
REC695-W0001-A2	695-W0001-01	250-254
REC696-14590-01	696-14590-01	98
REC696-45113-00	696-45113-00	239
REC696-45113-00	696-45113-A0	253
REC696-45113-00		254
REC696-85540-12	696-85540-10	119
REC696-85540-12	696-85540-11	119
REC696-85540-12	696-85540-12	119
REC696-W0093-00	696-W0093-00	239
REC696-W0093-00	696-W0093-02	96
REC697-11181-A1	697-11181-A2	239-249-254
REC697-45114-00	697-45114-A0	254-271
REC697-45384-00	697-45384-00	359-365-369
REC697-45551-00	697-45551-00	369-390
REC697-45560-00	697-45560-00	369-390
REC697-45570-00	697-45571-00	369
REC697-45571-00-00		390
REC697-45611-00	697-45611-00	369-388-390
REC697-85570-00	697-85570-00	105
REC697-85570-10	697-85570-11	105
REC697-W0001-02	697-W0001-02	239
REC697-W0001-02	697-W0001-A0	251
REC697-W0001-02		254
REC698-W0001-21	698-W0001-21	145-368
REC69D-45501-10		390
REC69D-W0001-20	69D-W0001-20	146
REC69G-45510-10		387
REC69G-45510-20		387
REC69G-W0001-20	69G-W0001-20	144-289
REC69G-W0078-01	69G-W0078-00	150
REC69G-W0078-01	69G-W0078-01	150
REC69J-11181-03	69J-11181-03	216-218
REC69J-11182-03	69J-11182-03	216-218
REC69J-11351-11	69J-11351-11	213-218
REC69J-12111-00	69J-12111-00	211
REC69J-12119-00	69J-12119-00	211
REC69J-13645-00	69J-13645-A1	273
REC69J-13761-00	69J-13761-00	90
REC69J-13906-00	69J-13906-00	89-90
REC69J-13907-03	69J-13907-00	86
REC69J-13907-03	69J-13907-01	86
REC69J-13907-03	69J-13907-02	86
REC69J-13907-03	69J-13907-03	86
REC69J-13907-03	69J-13907-04	86
REC69J-15451-00	69J-15451-00	213
REC69J-15451-00	69J-15451-A1	273
REC69J-24410-02	69J-24410-00	86
REC69J-24410-02	69J-24410-01	86
REC69J-24410-02	69J-24410-02	86
REC69J-24501-10	69J-24501-10	71-72-81
REC69J-24502-00	69J-24502-00	81
REC69J-41134-A0	69J-41134-A0	270
REC69J-41135-A0	69J-41135-A0	270
REC69J-41138-00	69J-41138-00	270
REC69J-45123-00	69J-45123-00	270
REC69J-45361-00-8D	69J-45361-00-8D	331-383
REC69J-45375-00	69J-45375-00	331-383
REC69J-45611-00	69J-45611-00	331-337-392
REC69J-45631-00	69J-45631-00	331-337-392
REC69J-46241-00	69J-46241-00	267
REC69J-81960-13	69J-81960-10	116
REC69J-81960-13	69J-81960-11	116
REC69J-81960-13	69J-81960-12	116
REC69J-81960-13	69J-81960-13	116
REC69J-85885-00	69J-85885-00	90-102
REC69J-W0001-20-00	69J-W0001-20	147
REC69K-45611-00	69K-45611-00	331-337
REC69L-11631-00K		267
REC69L-11642-00		267
REC69M-E1603-01	69M-E1603-01	173-219
REC69P-85541-09	69P-85541-09	106
REC69W-82575-00	69W-82575-00	120
REC6A0-14325-00	6A0-14325-00	99
REC6A0-24410-04	6A0-24410-00	85
REC6A0-24410-04	6A0-24410-01	85
REC6A0-24410-04	6A0-24410-02	85
REC6A0-24410-04	6A0-24410-03	85
REC6A0-24410-04	6A0-24410-04	85
REC6A0-82550-01	6A0-82550-01	120
REC6A0-W0001-21	6A0-W0001-21	146

REF	R.O. / OEM	
REC6A1-14301-03		92-93
REC6A1-14613-A0	6A1-14613-00	270
REC6A1-14613-A0	6A1-14613-01	270
REC6A1-14613-A0	6A1-14613-A0	220-270
REC6A1-44325-00	6A1-44325-00P	343
REC6A1-44361-00	6A1-44361-00	343
REC6A1-85540-01	6A1-85540-00	118
REC6A1-85540-01	6A1-85540-01	118
REC6A1-85570-00	6A1-85570-00	105
REC6A1-W0001-22	6A1-W0001-22	144
REC6A1-W0001-23	6A1-W0001-23	144-343
REC6A1-W0078-01	6A1-W0078-01	150-155-343
REC6A1-W0093-01	6A1-W0093-01	93-95
REC6AG-11181-00	6AG-11181-00	215
REC6AG-11181-00	6AG-11181-10	187
REC6AG-11181-00		218
REC6AH-11351-00	6AH-11351-10	187-218
REC6AH-12411-00	69M-12411-00	136
REC6AH-12411-00	69M-12411-01	136-173-175
REC6AH-12411-00	6AH-12411-00	136-187
REC6AH-12411-00	6G8-12411-00	181
REC6AH-12411-00		65-137
REC6AH-13329-00	6AH-13329-00	271
REC6AH-15312-00	6AH-15312-00	271
REC6AH-W0078-00	6AH-W0078-00	150-153-292
REC6AH-W0078-00	6AH-W0078-01	150-292
REC6AH-W0078-00		65-154
REC6AW-11181-00	6AW-11181-00	214-216-218
REC6AW-11182-00	6AW-11182-00	214-216-218
REC6AW-11351-00	6AW-11351-00	214-218
REC6AW-12411-00	6AW-12411-00	73-137-214
REC6AW-13907-00	6AW-13907-00	86
REC6AW-13907-00	6P2-13907-00	86
REC6AW-14613-00	6AW-14613-00	272
REC6AW-14623-00	6AW-14623-00	272
REC6AW-14984-00	65L-13907-00	86
REC6AW-14984-00	66K-13907-00	86
REC6AW-14984-00	67H-13907-00	86
REC6AW-14984-00	6AW-14984-00	88
REC6AW-14984-00		73
REC6AW-15312-00	6AW-15312-00	272
REC6AW-15451-00	6AW-15451-00	214-272
REC6AW-41134-01	6AW-41134-00	270
REC6AW-43880-02	6AW-43880-00	123
REC6AW-43880-02	6AW-43880-01	123
REC6AW-43880-02	6AW-43880-02	123
REC6AW-44311-01	6AW-44311-00	148-341
REC6AW-44311-01	6AW-44311-01	148
REC6AW-44312-00	6AW-44312-00	335-341
REC6AW-44315-00	6AW-44315-00	341
REC6AW-44322-00	6AW-44322-00	335-341
REC6AW-44323-00	6AW-44323-00	341
REC6AW-44336-00	6AW-44336-00	341
REC6AW-44352-00	6AW-44352-00	143-341
REC6AW-44365-00	6AW-44365-00	335-341
REC6AW-45113-00	6AW-45113-00	272
REC6AW-8194A-00	6AW-8194A-00	115
REC6AW-81950-00	6AW-81950-00	115
REC6AW-W0078-00	6AW-W0078-00	73-153-155-341
REC6B4-11193-A0	6B4-11193-A0	140
REC6B4-11351-A1	6B4-11351-A1	252
REC6B4-14301-00	6B4-14301-00	91-93
REC6B4-26301-00	6B4-26301-00	129
REC6B4-85520-00	6B4-85520-00	107
REC6B4-85540-01	6B4-85540-01	120
REC6B4-85570-01	6B4-85570-00	104
REC6B4-85570-01	6B4-85570-01	104
REC6B4-85580-00	6B4-85580-00	107
REC6BG-11181-00	6BG-11181-00	201-215-218
REC6BG-13761-00	6BG-13761-00	89-90
REC6BG-13915-00	6BG-13915-00	67-80
REC6BG-W0078-00	6BG-W0078-00	67-151-153-154-302
REC6BL-11181-00	6BL-11181-00	195-215-218
REC6C5-13761-00	6C5-13761-00	89-90
REC6C5-13915-00	6C5-13915-00	68-69-70-81
REC6C5-14984-00	6C5-14984-00	68-69-86-88
REC6C5-24251-00	6C5-24251-00	67-68-69-70-80
REC6C5-24410-00	6C5-24410-00	85
REC6C5-46241-00	6C5-46241-00	195-201-203-205-267
REC6C5-85885-00	6C5-85885-00	90-102
REC6CB-11181-00	6CB-11181-00	216-218
REC6CB-13016-00	6CB-13016-00	70-71-72-73-88
REC6CB-14984-00	6CB-14984-00	70-71-72-73-88

REF	R.O. / OEM	
REC6CB-24501-01		70-72-73
REC6CB-45611-00	6CB-45611-00	335
REC6CE-12411-00	6CE-12411-00	73-137
REC6CE-44311-01	6CE-44311-00	148
REC6CE-44311-01	6CE-44311-01	148-335
REC6CE-44315-00	6CE-44315-00	335
REC6CE-44323-01	6CE-44323-01	335
REC6CE-44352-00	6CE-44352-00	143
REC6CE-44352-00	6CE-44352-01	335
REC6CE-44352-00		155
REC6CE-W0078-01	6CE-W0078-00	153
REC6CE-W0078-01	6CE-W0078-01	153-334
REC6CE-W0078-01		73
REC6CJ-11181-00	6CJ-11181-00	205-215-218
REC6CJ-44323-00	6CJ-44323-00	317
REC6CJ-44324-00	6CJ-44324-00	317
REC6CJ-W0078-00	6CJ-W0078-00	69-151-153-154-314
REC6D0-11181-00	6D0-11181-00	249-254
REC6D0-44362-01	6D0-44362-01	335-339
REC6D0-44367-00	6D0-44367-00	335-339
REC6D0-45332-00-CA	6D0-45332-00-CA	337
REC6D0-45361-00-8D	6D0-45361-00-8D	337
REC6D0-W0001-00	6D0-W0001-00	252-254
REC6D8-11603-10	6D8-11603-01	209
REC6D8-11604-10	6D8-11604-01	209
REC6D8-12111-00	6D8-12111-00	209
REC6D8-12121-10	6D8-12121-10	209
REC6D8-13761-00	6D8-13761-00	89-90
REC6D8-43880-09	6D8-43880-00	123
REC6D8-43880-09	6D8-43880-09	123
REC6D8-WS24A-00	6D8-24563-00	80
REC6D8-WS24A-00	6D8-WS24A-00	80
REC6D8-WS24A-00		66-67-68-69-70-71-81
REC6D9-12411-00	6D9-12411-00	70-137
REC6D9-45551-00	6D9-45551-00	319
REC6DA-11181-00	6DA-11181-00	216-218
REC6DA-12411-01	6DA-12411-01	72-136-137
REC6DA-13761-00		90
REC6E0-11193-A1	6E0-11193-A1	221
REC6E0-11631-00-98K	6E0-11631-00-98	221-262-266
REC6E0-11651-01	6E0-11651-01	221-225-260
REC6E0-24411-00	6E0-24411-00	87
REC6E0-24434-00	6G1-24431-01	87
REC6E0-24435-00	6E0-24435-00	87
REC6E0-24471-00	6E0-24471-00	87
REC6E0-26301-01	6E0-26301-01	129
REC6E0-41112-A1	6E0-41112-A1	140-21
REC6E0-41114-A1	6E0-41114-A1	140-221
REC6E0-43118-01	6E0-43118-00	134
REC6E0-43118-01	6E0-43118-01	134
REC6E0-44322-02	6E0-44322-02	154-155-345
REC6E0-44352-00	6E0-44352-00	143-154-155-287-345
REC6E0-45113-A1	6E0-45113-A1	221-252
REC6E0-45316-00	6E0-45316-09	345
REC6E0-45317-00	6E0-45317-09	345
REC6E0-45511-01	6E0-45511-01	345-387
REC6E0-45511-11	6E0-45511-11	345-387
REC6E0-45551-00	6E0-45551-00	345-387
REC6E0-45560-00	6E0-45560-00	345-387
REC6E0-45570-00	6E0-45570-00	345-387
REC6E0-45611-01	6E0-45611-01	345
REC6E0-45631-00	6E0-45631-00	345-387
REC6E0-85540-71	6E0-85540-70	119
REC6E0-85540-71	6E0-85540-71	119
REC6E0-85570-00	6E0-85570-00	104
REC6E0-W0001-C1	6E0-W0001-C1	144-285-345
REC6E0-W0078-A2	6E0-W0078-00	150-153
REC6E0-W0078-A2	6E0-W0078-01	150-153
REC6E0-W0078-A2	6E0-W0078-02	150-153
REC6E0-W0078-A2	6E0-W0078-A2	150-153-155-285-345
REC6E3-14301-05		92-93
REC6E5-11181-A0	6E5-11181-A2	245-249-254
REC6E5-11193-A0	6E5-11193-A0	245-255
REC6E5-11381-A1	6E5-11381-A1	275
REC6E5-11381-A1	6E5-11381-A2	245-247
REC6E5-11411-00		256
REC6E5-11447-00	6E5-11447-00	245-247
REC6E5-11610-02	6E5-11610-02	265-266-267
REC6E5-11633-00	6E5-11633-01	261-265
REC6E5-11634-00	6E5-11634-00	265
REC6E5-11650-01		261
REC6E5-11651-00		261
REC6E5-12411-02	6E5-12411-00	136

REF	R.O. / OEM	
REC6E5-12411-02	6E5-12411-01	136-221-223-229-231-233
REC6E5-12411-02	6E5-12411-02	136
REC6E5-12411-02		137
REC6E5-12411-30	688-12411-10	243
REC6E5-12411-30	6E5-12411-10	137
REC6E5-12411-30	6E5-12411-20	137
REC6E5-12411-30	6E5-12411-30	137-227-237-245-247
REC6E5-12411-30		137
REC6E5-13411-00	6E5-13411-00	83
REC6E5-13621-A1	6E5-13621-A1	275
REC6E5-13645-A1-00	6E5-13645-A1	275
REC6E5-14198-A2	6E5-14198-A2	275
REC6E5-14323-03	6E5-14323-03	99
REC6E5-14328-01	6E5-14328-01	99
REC6E5-14385-02	6E5-14385-02	93-100
REC6E5-14386-01	6E5-14386-01	99
REC6E5-14386-02	6E5-14386-02	99
REC6E5-14416-A1	6E5-14416-A1	275
REC6E5-14483-A1	6E5-14483-A1	275
REC6E5-14546-00	6E5-14546-00	93-98
REC6E5-24351-51	6E5-24351-00	76
REC6E5-24351-51	6E5-24351-51	76
REC6E5-24410-03	6E5-24410-01-00	85
REC6E5-24411-00	6E5-24411-00-00	87
REC6E5-24434-02	6E5-24434-02	88
REC6E5-24435-00	6E5-24435-00	88
REC6E5-24471-00	6E5-24471-00	87
REC6E5-41112-A1	6E5-41112-A1	142-245
REC6E5-41134-A0	6E5-41134-A0	269-270
REC6E5-44150-02	6E5-44150-01	377
REC6E5-44311-00	6E5-44311-00	155-156-157-381
REC6E5-44312-00	6E5-44312-00	325-329-333-339-385-386
REC6E5-44315-A0	6E5-44315-A0	156-157-325-329-333-377-381-385
REC6E5-44322-00	6E5-44322-00	156-157-381
REC6E5-44323-00-40	6E5-44323-00	149-155-156-157-377
REC6E5-44352-01	6E5-44352-01	143-155-156-157-325-329-333-339-377-381-385-386
REC6E5-44365-00	6E5-44365-00	155-157-325-329-333-339-377-381-385-386
REC6E5-44366-00	6E5-44366-00	155-156-157-325-333-339-377-381
REC6E5-45113-A2	6E5-45113-A0	253-254
REC6E5-45114-00	6E5-45114-A0	272
REC6E5-45321-00	6E5-45321-00	325-329-377-381
REC6E5-45331-00-94	6E5-45331-00-94	377-381
REC6E5-45331-00-94	6E5-45331-00-9S	325-329
REC6E5-45331-00-94		391
REC6E5-45332-00-94	6E5-45332-00-94	375
REC6E5-45332-00-94	6E5-45332-00-CA	323
REC6E5-45344-00	6E5-45344-00	325-329-333-339-377-381-385
REC6E5-45371-01	6E5-45371-01	161-169-375
REC6E5-45501-01	6E5-45501-01	377-391
REC6E5-45536-00	6E5-45536-00	325-377
REC6E5-45536-00	6E5-45536-01	329
REC6E5-45551-00	6E5-45551-02	375-391
REC6E5-45560-00	6E5-45560-01	375-391
REC6E5-45567-01	6E5-45567-01	323
REC6E5-45567-01	6E5-45567-01-60	375
REC6E5-45570-00	6E5-45571-01	375-391
REC6E5-45576-00	6E5-45576-00	323-375
REC6E5-45587-01	6E5-45587-01	325-329-377
REC6E5-45611-00	6E5-45611-00	323
REC6E5-45611-00	6E5-45611-01	375
REC6E5-45611-00		391-392
REC6E5-45631-00	6E5-45631-01	375-391-392
REC6E5-45633-01	6E5-45633-01	323-327-335-375-379-391-392
REC6E5-45634-01	6E5-45634-01	323-327-375
REC6E5-45634-01	6E5-45634-02	327
REC6E5-45641-03	6E5-45641-02	375
REC6E5-45641-03	6E5-45641-03	327-379
REC6E5-45987-00	63P-45987-00	323-327
REC6E5-45987-00	6E5-45978-01	379
REC6E5-45987-00	6E5-45987-01	375
REC6E5-45987-00		405
REC6E5-81900-01	6E5-81900-01	84
REC6E5-85510-11	6E5-85510-10	121
REC6E5-85510-11	6E5-85510-11	121

REF	R.O. / OEM	
REC6E5-85540-12	6E5-85540-10	119
REC6E5-85540-12	6E5-85540-11	119
REC6E5-85540-12	6E5-85540-12	119
REC6E5-85570-11	6E5-85570-10	105
REC6E5-85570-11	6E5-85570-11	105
REC6E5-W0001-A2	6E5-W0001-A2	251
REC6E5-W0001-A2	6N6-W0001-A3	245
REC6E5-W0001-A2		254
REC6E5-W0001-F1	6E5-W0001-F1	147-374-378
REC6E5-W0001-F1	6F3-W0001-21	147
REC6E5-W0093-06	6E5-W0093-06	97-245
REC6E5-W0093-07	6E5-W0093-07	97
REC6E5-W0093-08	6E5-W0093-08	97
REC6E7-11111-01-1S	6E7-11111-01-1S	227
REC6E7-11181-00	6E7-11181-A2	248-254
REC6E7-11631-00K	6E7-11631-00	262
REC6E7-11631-00K	6E7-11631-00-97	227
REC6E7-11631-00K		266
REC6E7-11635-00K	6E7-11635-00	227-262
REC6E7-11636-00K	6E7-11636-00	227-262
REC6E7-14227-00	6E7-14227-00	94
REC6E7-14385-00	6E7-14385-00	93-100
REC6E7-44366-00	6E7-44366-00	349
REC6E7-45331-00-CA	6E7-45331-00-9M	349
REC6E7-45501-00	6E7-45501-00	349
REC6E7-45501-11	6E7-45501-10	349-387-388
REC6E7-45536-00	6E7-45536-00	349
REC6E7-45551-00	6E7-45551-00	348-387-388
REC6E7-45560-01	6E7-45560-00	349
REC6E7-45560-01	6E7-45560-01	291-293-351
REC6E7-45560-01		387-388
REC6E7-45570-00	6E7-45570-00	293
REC6E7-45570-00	6E7-45571-00	291-349-351
REC6E7-45570-00		387-388
REC6E7-45987-00	6E7-45987-00	291-349
REC6E7-45987-00	6E7-45987-01	293-351
REC6E7-45987-00		405
REC6E7-85570-19	6E7-85570-19-00	106
REC6E7-W0001-A1	6E7-W0001-00	249
REC6E7-W0001-A1	6E7-W0001-A1	249
REC6E7-W0001-A1		254
REC6E7-W0093-01	6E7-W0093-04	95
REC6E8-14390-12	6E8-14390-12	98
REC6E9-11193-A0	6E9-11193-A0	255
REC6E9-12413-00-1S	6E9-12413-00-1S	139-235
REC6E9-12414-A1	6E9-12414-A1	138-139-235
REC6E9-14198-A0	6E9-14198-A0	275
REC6E9-41114-A0	6E9-41114-A0	142
REC6E9-82575-02	6E9-82575-00	120
REC6E9-W0093-02	6E9-W0093-02	96
REC6E9-W0093-03	6E9-W0093-03	96
REC6EE-W0078-01	6BX-WG0078-00	150
REC6EE-W0078-01	6EE-W0078-00	150
REC6EE-W0078-01	6EE-W0078-01	150
REC6EK-13761-00		90
REC6F3-W0001-04-00	6F3-W0001-A4	251
REC6F5-11181-A2	6F5-11181-A1	235
REC6F5-11181-A2	6F5-11181-A2	248
REC6F5-11181-A2		254
REC6F5-11515-00	6F5-11515-00	233-235
REC6F5-11610-00	6F5-11610-00	263
REC6F5-11610-00	6F6-11610-00	235
REC6F5-11610-10	6F5-11610-10	263
REC6F5-11610-10	6F6-11610-010	235
REC6F5-11610-20	6F5-11610-20	263
REC6F5-11610-20	6F6-11610-20	235
REC6F5-11633-00	6F5-11633-00	233-235-260-261-263
REC6F5-11651-00	6F5-11651-00	233-235-260-261
REC6F5-11681-00	6F5-11681-00	235-261
REC6F5-12411-03	6F5-12411-00	137
REC6F5-12411-03	6F5-12411-01	137
REC6F5-12411-03	6F5-12411-02	137-235-239
REC6F5-12411-03	6F5-12411-03	137
REC6F5-12411-03		137
REC6F5-13621-A1	6F5-13621-A1	275
REC6F5-13645-A0	6F5-13645-A1	274
REC6F5-13646-A2	6F5-13646-A1	274
REC6F5-14198-A1	6F5-14198-A1	275
REC6F5-14323-00	6F5-14323-01	98
REC6F5-14384-00	6F5-14384-00	94
REC6F5-14390-21	6F5-14390-21	98
REC6F5-14398-00	6F5-14398-00	94
REC6F5-14483-00	6f5-14483-00	94
REC6F5-15396-01-5B	6F5-15396-01-5B	235

REF	R.O. / OEM	
REC6F5-24563-00	6F5-24563-00	80-81-82
REC6F5-26311-00	6F5-26311-00	129
REC6F5-41111-01-1S	6F5-41111-01-1S	235
REC6F5-41112-A0	6F5-41112-A0	141-235
REC6F5-41113-A0-1S	6F5-41113-01-1S	235
REC6F5-41114-A0	6F5-41114-A0	142-235
REC6F5-44352-00	6F5-44352-00	143-363
REC6F5-44352-00	6F5-44352-002	367
REC6F5-44352-00		156
REC6F5-45113-A0	6F5-45113-A0	235-253-254
REC6F5-45312-00-4D	6F5-45312-01-4D	363
REC6F5-45551-00	6F5-45551-00	363-389-390
REC6F5-45560-00	6F5-45560-00	363-389-390
REC6F5-45570-00	6F5-45570-00	363-389-390
REC6F5-85540-22	6F5-85540-22	119
REC6F5-85570-11	F5-85570-13	105
REC6F5-W0001-C0	6F5-W0001-C0	145-363
REC6F5-W0078-A0	6F5-W0078-00	151
REC6F5-W0078-A0	6F5-W0078-A0	363
REC6F5-W0078-A0		156
REC6F6-11111-00-1S	6F6-11111-00-1S	235
REC6F6-11191-00-1S	6F6-11191-00-1S	235
REC6F6-11193-A1	6F6-11193-A1	235-255
REC6F6-11400-02	6F6-11400-01	235
REC6F6-11631-00K	6F6-11631-00-95	235-263
REC6F6-11635-00K	6F6-11635-00	235-263
REC6F6-11636-00K	6F6-11636-00	235-263
REC6F6-13610-00	6F6-13610-00	99
REC6F6-14301-06	6F6-14301-06	91
REC6F6-14341-00	6F6-14341-00	98
REC6F6-14385-00	6F6-14385-00	100
REC6F6-45611-00	6F6-45611-00	363-389-390
REC6F6-85530-01	6F6-85530-01	106
REC6F6-85540-01	6F6-85540-01	118
REC6F6-W0001-02	6F6-W0001-02	234
REC6F6-W0093-00	6F6-W0093-00	96-234
REC6F8-11181-A0	6F8-11181-A1	220-248-254
REC6FM-12411-00	6FM-12411-00	66-136-137
REC6FM-13761-00		90
REC6FP-12411-00	6FP-12411-00	70-137
REC6G0-11412-00	69P-11412-00	229-256
REC6G0-11422-00	69P-11422-00	229-256
REC6G0-11432-00	69P-11432-00	229-256
REC6G0-11442-00	69P-11442-00	229-256
REC6G0-11681-00		261
REC6G0-85540-11	6G0-85540-11	119
REC6G1-11193-A1	6G1-11193-A1	140-223
REC6G1-11610-00	6G1-11610-00	221-262
REC6G1-11610-00	6N0-E1603-00	223
REC6G1-11610-00		266
REC6G1-11633-00	6G1-11633-00	221-225-260-262
REC6G1-11681-00	6G1-11681-00	221-223-225-260
REC6G1-13621-A1	6G1-13621-A1	273
REC6G1-13645-A1	6G1-13645-A1	273
REC6G1-14198-A1	6G1-14198-A1	273
REC6G1-14301-01		91-93
REC6G1-14546-00	6G1-14546-01	93-98
REC6G1-14985-00	647-14323-00	93-100
REC6G1-24304-02	6G1-24304-02	77
REC6G1-24411-00	6G1-24411-00	87
REC6G1-24431-01	6G1-24431-01	87
REC6G1-24471-00	6G1-24471-00	87
REC6G1-41112-A1	6G1-41112-A1	140-223
REC6G1-41114-A0	6G1-41114-A0	140-223
REC6G1-41133-A0	6G1-41133-A0	268
REC6G1-44315-A0	6G1-44315-A0	155-346
REC6G1-44322-00	6G1-44322-00	155-346
REC6G1-44323-00	6G1-44323-00	155-346
REC6G1-44328-00	6G1-44328-00	346
REC6G1-44352-00	6G1-44352-00	143-155-346
REC6G1-45113-A1	6G1-45113-A1	223-252
REC6G1-45315-A0	6G1-45315-A0	346
REC6G1-45316-09	6G1-45316-09	289
REC6G1-45317-09	6G1-45317-09	289
REC6G1-45362-09	6G1-45362-09	289
REC6G1-45611-01	6G1-45611-01	346-387
REC6G1-45631-00	6G1-45631-00	346-387
REC6G1-81970-62	664-81970-60	116
REC6G1-81970-62	664-81970-61	116
REC6G1-81970-62	664-81970-62	116
REC6G1-81970-62	664-81970-63	116
REC6G1-81970-62	676-81970-00	116
REC6G1-81970-62	6E9-81970-70	116
REC6G1-81970-62	6G1-81970-00	116
REC6G1-81970-62	6G1-81970-60	116

REF	R.O. / OEM	
REC6G1-81970-62	6G1-81970-61	116
REC6G1-81970-62	6G1-81970-62	116
REC6G1-81970-62	6G1-81970-A0	116
REC6G1-W0001-C1	6G1-W0001-C0	144
REC6G1-W0001-C1	6N0-W0001-20	346
REC6G1-W0078-A1	6G1-W0078-00	150
REC6G1-W0078-A1	6G1-W0078-01	150
REC6G1-W0078-A1	6G1-W0078-A1	150-346
REC6G1-W0078-A1	6N0-W0078-A0	150
REC6G1-W0078-A1		155
REC6G1-W0093-00	6G1-W0093-00	93-95-223
REC6G5-11181-A2	6G5-11181-A3	247-249-254
REC6G5-11193-A0	6F5-11193-A0	247
REC6G5-11193-A0	6G5-11193-A1	255
REC6G5-11382-A1	6G5-11382-A1	142-245-247
REC6G5-11411-02	6G5-11411-02	247-256
REC6G5-11631-00K	6G5-11631-00-93	265-266-267
REC6G5-11642-00K	6G5-11642-00-93	265-266-267
REC6G5-13645-A1	6G5-13645-A2	276
REC6G5-14416-A1	6G5-14416-A1	275
REC6G5-14483-01	6G5-14483-A1	276
REC6G5-41112-A1	6G5-41112-A1	142-247
REC6G5-41114-A0	6G5-41114-A0	142-247
REC6G5-41134-A1	6G5-41134-A1	270
REC6G5-41217-00	6G5-41217-01	101
REC6G5-43864-00	6G5-43864-00	125
REC6G5-44150-02	6G5-44150-02	381
REC6G5-44323-00	6G5-44323-00	329-333-381-385
REC6G5-44323-00	6G5-44323-01	149
REC6G5-44323-00		155-157
REC6G5-45113-A1	6G5-45113-A1	245-247
REC6G5-45113-A1	6G5-45113-A2	253
REC6G5-45113-A1		254
REC6G5-45114-A0	6G5-45114-A1	272
REC6G5-45383-01	6G5-45383-01	327-379
REC6G5-45384-00	6G5-45384-00	327-379
REC6G5-45501-21	6G5-45501-21	381-391-392
REC6G5-45536-01	6G5-45536-01	381
REC6G5-45551-00	6G5-45551-01	379-391-392
REC6G5-45560-00	6G5-45560-01	379-391-392
REC6G5-45571-00	6G5-45571-02	379-391-392
REC6G5-45576-10	6G5-45576-10	327
REC6G5-45631-00	6G5-45631-00	379-391-392
REC6G5-81960-A0	6G5-81960-A0	116
REC6G5-85510-11	6G5-85510-10	121
REC6G5-85540-12	6G5-85540-10	119
REC6G5-85540-12	6G5-85540-11	119
REC6G5-85540-12	6G5-85540-12	119
REC6G5-W0001-A3	6G5-W0001-03	252
REC6G5-W0001-A3	6G5-W0001-A3-00	247
REC6G5-W0001-A3		254
REC6G5-W0078-A1	6G5-W0078-00	152
REC6G5-W0078-A1	6G5-W0078-01	152
REC6G5-W0078-A1	6G5-W0078-A1	152-378
REC6G5-W0078-A1		157
REC6G8-11181-A1	6G8-11181-00	181
REC6G8-11181-A1	6G8-11181-A1	215
REC6G8-11181-A1		218
REC6G8-11351-A0	6G8-11351-00	181
REC6G8-11351-A0	6G8-11351-A0	217
REC6G8-11351-A0		218
REC6G8-12414-A0	60R-E2414-A0	180
REC6G8-12414-A0	6G8-12414-00	181
REC6G8-12414-A0	6G8-12414-A0	138
REC6G8-13440-00	6G8-13440-00	83
REC6G8-13645-00	6G8-13645-00	273
REC6G8-13646-A0	6G8-13646-00	273
REC6G8-14198-A0	6G8-14198-00	273
REC6G8-15374-00	6G8-15374-00	273
REC6G8-41112-02	6G8-41112-02	140-181
REC6G8-41114-00	6G8-41114-00	140
REC6G8-45113-A1	6G8-45113-A1	271
REC6G8-46241-00	6G8-46241-00	267
REC6G8-81870-00	6G8-81870-00	120
REC6G8-81960-A1	6G8-81960-A1	117
REC6G8-W0001-A3	6G8-W0001-A3	181-216-218
REC6G9-85540-29	6G9-85540-20	117-118
REC6G9-85540-29	6G9-85540-21	117-118
REC6G9-85540-29	6G9-85540-22	117-118
REC6G9-85540-29	6G9-85540-29	117-118
REC6G9-W0001-C4	6G9-W0001-C4	144
REC6G9-W0001-C6	6G9-W0001-C6	144
REC6H0-81960-00	6H0-81960-00	116
REC6H0-W0093-00	6H0-W0093-00	97
REC6H1-11631-03K	6H1-11631-03-95	264-266

REF	R.O. / OEM	
REC6H1-15359-01-94	6H1-15359-01-94	243
REC6H1-43800-17-8D	6H1-43800-13-4D	124
REC6H1-43800-17-8D	6H1-43800-14-4D	124
REC6H1-43800-17-8D	6H1-43800-15-4D	124
REC6H1-43800-17-8D	6H1-43800-16-4D	124
REC6H1-43800-17-8D	6H1-43800-17-8D	124
REC6H1-44144-00	6H1-44144-00	373
REC6H1-45214-00	6H1-45214-00	315-319
REC6H1-45215-00	6H1-45215-00	315-319
REC6H1-45611-00	6H1-45611-01-00	373-390-391
REC6H1-45631-01	6H1-45631-01-00	373-390-391
REC6H1-45634-02	6H1-45634-02	373
REC6H1-45668-00	6H1-45668-00	315-319-331-335-337-341-373-383
REC6H1-81950-01	6H1-81950-00	115
REC6H1-81950-01	6H1-81950-01	115
REC6H1-85510-00	6H1-85510-00	121
REC6H1-W0001-00-00	6H1-W0001-A1	251
REC6H1-W0093-01-00	6H1-W0093-01	97
REC6H1-W0093-01-00	6H1-W0093-01-00	243
REC6H1-W0093-10	6H1-W0093-10	97
REC6H2-81960-10	6H2-81960-10	116
REC6H2-85540-13	6H2-85540-10	118
REC6H2-85540-13	6H2-85540-11	118
REC6H2-85540-13	6H2-85540-12	118
REC6H2-85540-13	6H2-85540-13	118
REC6H2-W0001-20	6H2-W0001-20	146
REC6H2-W0093-10	6H2-W0093-10	96-241
REC6H3-11181-A0	6H3-11181-A2	241-248-254
REC6H3-11193-A1	6H3-11193-A1	241-255
REC6H3-11631-01K	6H3-11631-01-96	241-262-266
REC6H3-11633-00	6H3-11633-00	241-261-262-264
REC6H3-11635-01K	6H3-11635-01	241-262
REC6H3-11636-01K	6H3-11636-01	241-262
REC6H3-12411-10	6H3-12411-00	137
REC6H3-12411-10	6H3-12411-01	137
REC6H3-12411-10	6H3-12411-10	137-241
REC6H3-12411-10	6H3-12411-11	137
REC6H3-12411-10		137
REC6H3-12414-A1	62Y-12414-00	203-205-207
REC6H3-12414-A1	6H3-12414-A1	138-241
REC6H3-13621-A1	6H3-13621-A1	274
REC6H3-13622-A1	6H3-13622-A1	274
REC6H3-14198-A1	6H3-14198-A1	274
REC6H3-14457-01	6H3-14457-01	94
REC6H3-14590-00	6H3-14590-01	93-98
REC6H3-41112-A0	6H3-41112-A0	141-241
REC6H3-41114-A0	6H3-41114-A0	141-241
REC6H3-41217-00	6H3-41217-00	101
REC6H3-44311-00	6H3-44311-00	148
REC6H3-44315-00		154-156
REC6H3-44323-00	6H3-44323-00-00	149-154-156
REC6H3-44352-00	697-44352-00	369
REC6H3-44352-00	6H3-44352-00	143-313-317
REC6H3-44352-00		154-156
REC6H3-45113-00	6H3-45113-00	241
REC6H3-45113-00	6H3-45113-A0	253
REC6H3-45113-00		254
REC6H3-45114-A1	6H3-45114-A1	271
REC6H3-45123-00	6H3-45123-00	269
REC6H3-45127-00	6H3-45127-00	269
REC6H3-82510-03	6H3-82510-00	114
REC6H3-82510-03	6H3-82510-01	114
REC6H3-82510-03	6H3-82510-02	114
REC6H3-82510-03	6H3-82510-03	114
REC6H3-85520-00	6H3-85520-00	107
REC6H3-85540-11	6H3-85540-10	118
REC6H3-85540-11	6H3-85540-11	118
REC6H3-85540-11	6H3-85540-12	118
REC6H3-85540-13	6H3-85540-10	118
REC6H3-85540-13	6H3-85540-11	118
REC6H3-85540-13	6H3-85540-12	118
REC6H3-85540-13	6H3-85540-13	118
REC6H3-85570-10	6H3-85470-10	104
REC6H3-W0001-02	6H3-W0001-02	241-250-254
REC6H3-W0001-22	6H3-W0001-22	145
REC6H3-W0078-02	6H3-W0078-00	68-69-152-154-156
REC6H3-W0093-02	6H3-W0093-02	93-97
REC6H4-11181-00	6H4-11181-A2	248-254
REC6H4-11193-A1	6H4-11193-00	255
REC6H4-11610-00-00	6H4-11610-00	264-266
REC6H4-11631-00K	6H4-11631-00-96	264-266
REC6H4-11631-01K	6H4-11631-01-95	237-263-266
REC6H4-11634-01	6H4-11634-01	237-263-264

REF	R.O. / OEM	
REC6H4-11635-00K	6H4-11635-00	264
REC6H4-11635-01K	6H4-11635-01	237-263
REC6H4-11636-00K	6H4-11636-00	264
REC6H4-11636-01K	6H4-11636-01	237-263
REC6H4-11641-00	6H4-11641-00	237-261
REC6H4-14198-01	6H4-14198-01	274
REC6H4-14198-09	6H4-14198-00	274
REC6H4-14984-00	6H4-14984-00	94
REC6H4-14985-01	650-14385-00	100
REC6H4-14985-01	6H4-14985-00	100
REC6H4-14985-01	6H4-14985-01	100
REC6H4-14985-01	6M6-14385-00	100
REC6H4-15369-A1	6H4-15369-A1	237
REC6H4-41112-A0	6H4-41112-A0	141-237
REC6H4-41114-A0	6H4-41114-A0	141-237
REC6H4-41134-A0	6H4-41134-A0	269
REC6H4-44352-00	6H4-44352-00	309
REC6H4-44352-02	6H4-44352-02	143-297-301-305-355-357-359-361
REC6H4-44352-02		154-155-156
REC6H4-45113-00	6H4-45113-00	237
REC6H4-45113-00	6H4-45113-A0	253
REC6H4-45113-00		254
REC6H4-45551-00	6H4-45551-00	359-389-390
REC6H4-45560-00	6H4-45560-00	359-389-390
REC6H4-45570-00	6H4-45571-00	359-389-390
REC6H4-45631-00		389-390
REC6H4-W0001-04	6H4-W0001-04	237-250
REC6H4-W0001-21	6H4-W0001-21	359
REC6H4-W0001-A1	6H4-W0001-01	250-254
REC6H4-W0078-00	6H4-W0078-00	151
REC6H4-W0078-00	6H4-W0078-A0	359
REC6H4-W0078-00		155-156
REC6H4-W0093-01-00	6H4-W0093-01	96
REC6H4-W0093-03	6H4-W0093-03	96-237
REC6H9-45551-00	6H9-45551-00	365-389
REC6J1-11610-00	6J1-11610-00	221
REC6J8-11181-A2	6J8-11181-A1	231
REC6J8-11181-A2	6J8-11181-A2	248
REC6J8-11181-A2		254
REC6J8-11631-02	6J8-11631-02-97	231-263-266
REC6J8-13411-00	6J8-13411-00	83
REC6J8-24471-00	6J8-24471-00	87
REC6J8-45113-00	6J8-45113-A0	231-253-254
REC6J8-85540-H2	6J8-85540-H2	120
REC6J8-W0001-21	6J8-W0001-21	145-357
REC6J8-W0078-A2	6J8-W0078-A1	150-151
REC6J8-W0078-A2	6J8-W0078-C2	357
REC6J8-W0078-A2		155
REC6J9-45332-00-CA	6J9-45332-00-CA	327-379-391-392
REC6J9-45611-00	6J9-45611-01	327-379-391-392
REC6K1-82510-07	6K1-82510-06	113
REC6K1-82570-13	6K1-82570-13	128
REC6K4-11422-00		256
REC6K4-11432-00		256
REC6K4-11651-00		260
REC6K5-11601-02	6K5-11601-02	241-262-264-266
REC6K5-11601-12	6K5-11601-12	241-262-264
REC6K5-11601-22	6K5-11601-22	241-262-264
REC6K5-11631-03K	6K5-11631-03-95	264-266
REC6K5-11635-03K	6K5-11635-03	264
REC6K5-11636-03K	6K5-11636-03	264
REC6K5-11681-00		261
REC6K5-14301-03	6K5-14301-03 + 6K5-14302-03 + 6K5-14303-03	92-93
REC6K5-45551-00		388-390
REC6K5-45560-00		388-390
REC6K5-45570-00		390
REC6K5-W0001-02	6K5-W0001-02	251
REC6K5-W0078-01	6K5-W0078-01	152-156
REC6K7-11633-00	6K7-11633-00	261-265
REC6K7-13645-A2	6K7-13645-A2	276
REC6K7-13646-A2	6K7-13646-A2	276
REC6K7-W0093-09	6K7-W0093-09	97
REC6K8-41122-A1	6K8-41122-A1	141-229
REC6K8-41124-A1	6K8-41124-A1	141-229
REC6L2-11181-A1	6L2-11181-A3	248-254
REC6L2-11193-A1	6L2-11193-A1	254
REC6L2-13621-00	6L2-13621-00	274
REC6L2-14384-00-00	6L2-14384-00	94
REC6L2-14385-00	6L2-14385-00	93-100
REC6L2-14399-00	6L2-14399-00	94
REC6L2-26301-00	6L2-26301-00	129
REC6L2-41112-A3	6L2-41112-A2	141

REF	R.O. / OEM	
REC6L2-41114-A1	6L2-41114-A1	141
REC6L2-41133-A3	6L2-41133-A3	268
REC6L2-41134-00	6L2-41134-00	268
REC6L2-44322-00		155
REC6L2-44352-00	6L2-44352-00	66-143-155
REC6L2-45113-A2	6L2-45113-A1	253-254
REC6L2-45611-00	612-45611-00	295
REC6L2-45611-00	6L2-45611-00	355-388-389
REC6L2-45987-00	6L2-45987-01	295-355-357-405
REC6L2-W0001-03	6L2-W0001-A2	250-254
REC6L2-W0001-C3	6L2-W0001-C3	145
REC6L2-W0078-00	6L2-W0078-00	151-155
REC6L2-W0093-00	6L2-W0093-00	95
REC6L5-13761-00	65L-13761-00	89-90
REC6L5-14301-03		91-93
REC6L5-44323-00	6L5-44323-00	149
REC6L5-44352-00	6L5-44352-00	143-154
REC6L8-G3118-01	6L8-G3118-01	134
REC6N0-G2177-00	6N0-G2177-00	133
REC6N0-G5551-00	6N0-G5551-00	346-387
REC6N0-G5560-00	6N0-G5560-00	346-387
REC6N0-G5571-00	6N0-G5571-00	346-387
REC6N6-W0078-02	6E5-W0078-02	374
REC6N6-W0078-02	6N6-W0078-00	152
REC6N6-W0078-02	6N6-W0078-02	152
REC6N6-W0078-02		155-156-157
REC6N6-W0093-02	6N6-W0093-02	97-245
REC6N7-11411-00	6N7-11411-00	245-256
REC6P2-11181-00	6P2-11181-00	213-216-218
REC6P2-11182-00	6P2-11182-00	213-216-218
REC6P2-11193-00	6P2-11193-00	213
REC6P2-11194-00	6P2-11194-00	213
REC6P2-1131B-00	6P2-1131B-00	213
REC6P2-13761-00	6P2-13761-00	89-90
REC6P2-13761-11		90
REC6P2-13906-00	6P2-13906-00	89-90
REC6P2-14984-00	62P-14984-00	72-73-86-88
REC6P2-41112-00	6P2-41112-00	213
REC6P2-41114-00	6P2-41114-00	213
REC6P2-41122-00	6P2-41122-00	213
REC6P2-44150-00	6P2-44150-00	339
REC6P2-44323-00	6P2-44323-0	149
REC6P2-44323-00	6P2-44323-00	339
REC6P2-44323-00		155-157
REC6P2-45331-00-9S	6P2-45331-00-9S	339
REC6P2-45501-01	6P2-45501-00	339
REC6P2-45501-11	6P2-45501-10	339
REC6P2-46241-02	6P2-46241-01	213
REC6P2-46241-02	6P2-46241-02	267
REC6P2-81960-03	6P2-81960-02,03	116
REC6P2-W0001-01	6P2-W0001-00	217
REC6P2-W0001-01	6P2-W0001-01	213-217
REC6P2-W0001-01		218
REC6P2-W0078-00	61P2-W0078-00	336
REC6P2-W0078-00	6P2-W0078-00	153
REC6P2-W0078-00		73-155-157
REC6P2-WS245-00	6P2-24563-00	81
REC6P2-WS245-00	6P2-WS245-00	81
REC6P2-WS245-00		81
REC6P3-24564-00	6P3-24564-00	71-72-73-81
REC6P3-WS24A-00	6P3-24563-00	81
REC6P3-WS24A-00	6P3-WS24A-00	81
REC6P3-WS24A-00	6P3-WS24A-01	81
REC6P3-WS24A-00		71-72-73-81
REC6R3-11411-00		256
REC6R3-81960-10	6R3-81960-10	116
REC6R3-82563-01	6R3-82563-00	122
REC6R3-82563-01	6R3-82563-01	122
REC6R3-85570-01	6R3-85570-01104	104
REC6R3-W0001-03	6R3-W0001-A3	251
REC6R4-13200-02	6R4-13200-00	84
REC6R4-13200-02	6R4-13200-01	84
REC6R4-13200-02	6R4-13200-02	84
REC6R5-11603-00	6R5-11603-00	265-266-267
REC6R5-11631-01K	6R5-11631-11-93	265-266-267
REC6R5-11631-11K	6R5-11361-11-93	245
REC6R5-11631-11K	6R5-11631-11-93	265
REC6R5-11631-11K		266-267
REC6R5-11633-00	6R5-11633-10	245-247-261-265
REC6R5-11634-00	6R5-11634-00	265
REC6R5-11634-00	6R5-11634-10	245-247-265
REC6R5-11642-01K	6R5-11642-11-93	245-265-266-267
REC6R5-11642-11K	6R5-11642-11-93	265-266-267
REC6R5-11650-10	6F5-11650-11	247

REF	R.O. / OEM	
REC6R5-11650-10	6R5-116950-0	245
REC6R6-W0001-02-00	6R6-W0001-02	250-254
REC6R7-11181-A0	6R7-11181-A1	248-254
REC6S1-41136-00	6S1-41136-00	270
REC6S1-85885-00	6S1-85885-00	90-102
REC6X2-85885-10	61A-85885-00	103
REC6X2-85885-10	6X2-85885-10	103
REC703-48205-16	703-48205-10	126
REC703-48205-16	703-48205-11	126
REC703-48205-16	703-48205-12	126
REC703-48205-16	703-48205-13	126
REC703-48205-16	703-48205-14	126
REC703-48205-16	703-48205-15	126
REC703-48205-16	703-48205-16	126
REC703-48205-16	703-48205-17	126
REC703-48205-16	703-48205-18	126
REC703-48205-16	703-48205-1A	126
REC703-48205-16	703-48205-1B	126
REC703-48205-16	703-48205-20	126
REC703-48205-16	703-48205-21	126
REC703-48230-14	703-48230-10	126
REC703-48230-14	703-48230-11	126
REC703-48230-14	703-48230-12	126
REC703-48230-14	703-48230-13	126
REC703-48230-14	703-48230-14	126
REC703-48230-14	703-48230-15	126
REC703-48230-14	703-48230-16	126
REC703-48230-14	703-48230-17	126
REC703-48230-14	703-48230-18	126
REC703-48230-14	703-48230-1A	126
REC703-48230-14	703-48230-20	126
REC703-48230-14	703-48230-21	126
REC703-82510-44	703-82510-43	114
REC704-48205-R0	704-48205-11	127
REC704-48205-R0	704-48205-12	127
REC704-48205-R0	704-48205-13	127
REC704-48205-R0	704-48205-14	127
REC704-48205-R0	704-48205-15	127
REC704-48205-R0	704-48205-B0	127
REC704-48205-R0	704-48205-B1	127
REC704-48205-R0	704-48205-P0	127
REC704-48205-R0	704-48205-P1	127
REC704-48205-R0	704-48205-R0	127
REC704-48207-R0	704-48207-20	127
REC704-48207-R0	704-48207-21	127
REC704-48207-R0	704-48207-22	127
REC704-48207-R0	704-48207-30	127
REC704-48207-R0	704-48207-31	127
REC704-48207-R0	704-48207-39	127
REC704-48207-R0	704-48207-P1	127
REC704-48207-R0	704-48207-R0	127
REC704-82570-12	6E5-82570-05	127
REC704-82570-12	704-82570-08	127
REC704-82570-12	704-82570-10	127
REC704-82570-12	704-82570-11	127
REC704-82570-12	704-82570-12	127
REC70720		79
REC84419M	696-W0093-01	96
REC84419M	696-W0093-02	96
REC8542561	65W-W0093-02	95-190-197
REC855686		77
REC866169T01	6C5-13907-00	86
REC881346T	68V-81960-00	117
REC881346T	6D3-81960-00	117
REC89-825096T01	66G1-81941-10	114
REC89-825096T01	6E5-81950-01	114
REC89-825096T01	6G1-81940-00	114
REC89-825096T01		110
REC90101-06M56	90101-06M56	353
REC90101-06M56	97095-06030	209
REC90105-06M01	90105-06M01	363
REC90109-08022	90109-08022	239-243-247
REC90109-08M71	90109-08M71	245
REC90119-06M10	90119-06M10	325-329-333-377-385
REC90119-08M13	90119-08M13	321-357-371
REC90119-08M14	90119-08M14	317-325-329-333-335-339-341-377-381-385-386
REC90119-08M15	90119-08M15	301-305-309-13-361
REC90119-08M21	90119-08M21	231
REC90119-08M33	90119-08M33	317
REC90119-08M87	90119-08M87	321
REC90149-06M00	90149-06M00	365
REC90151-05M00	90152-05000	315-319
REC90170-12138	90170-012138	365

REF	R.O. / OEM	
REC90170-12138	90170-12138	299-303-307-311-359-361-369
REC90170-16M01	90170-16M01	315-319-323-327-371-375-379
REC90170-16M01	90170-16M01-00	373
REC90170-16M19	90170-16M19	331-335-337-383
REC90171-10M01	90171-10M01	289-291-293-405-351
REC90171-14013-00	90171-14013	295-353-355-357-405
REC90171-16011	90171-16011	299-303-307-311-315-319-359-361-365-369-371
REC90171-16011		405
REC90171-16011	90171-16011-00	373
REC90171-18M04	90171-18M04	323-327-331-335-337-341-375-379-383-405
REC90179-08M06	90179-08M06	291-293-348-351
REC90179-09M02	90179-09M02	353
REC90179-10M14	90179-10M14	295-355-357
REC90183-02M03	90183-02M03	315-319-331-335-337-341-373-383
REC90201-02M00	90201-02M00	331-335-337-341-383
REC90201-10M01	90201-10M01	289-405
REC90201-12565	90201-12565	225-260
REC90201-14377	9020-14377	227-260
REC90201-16M00	90201-16M00	331-335-337-383
REC90201-17682	90201-17682	291-293-349-351
REC90201-17M00	90201-17M00-00	373
REC90201-20417	90201-20417	233-235-239-241-243-260-261-353-355-357
REC90201-20M27	90201-20M27	229-260
REC90201-21M75	90201-21M75	245-247-261
REC90201-22429	90201-22429	299-303-307-359-361-365-369
REC90201-22M01	90201-22M01	325-329-333-377-381-385
REC90201-23M01	90201-23M01	245-247-261
REC90201-30M92	90201-30M92	323-327-375-379
REC90201-31M00	90201-31M00	331-383
REC90201-42014	90201-42014	339
REC90201-46M29	90201-46M29	227
REC90206-22M19	90206-22M19	325-329-333-377-381-385
REC90209-18112	90209-18112	221-223-225-260
REC90209-20159	90209-20M23	227-260
REC90209-24M03	90209-24M03	229-260-261
REC90209-27M07	90209-27M07	233-235-260-261
REC90209-27M11		261
REC90214-48M03	90214-48M03	365-369
REC90250-03M10	90250-03M10	343
REC90250-05010	90250-05010	291-293-295-349-351-353-355-357
REC90250-05036	90250-05036	347
REC90250-05046	90250-05046	345
REC90250-06023	90250-06023	299-303-307-311-359-361-363-365-369
REC90250-07M02	90250-07M02	315-319-371
REC90250-07M02	90250-07M02-00	373
REC90250-08M07	90250-08M07	323-327-335-375-379
REC90280-03024	90280-03024	154-155-156-309-313-346-347-349-357-359
REC90280-03M03	90280-03M03	154-156-301-305-317-355-361-369
REC90280-04002	90280-04002	335
REC90280-04M00	90280-04M00	156-363-367
REC90280-04M04	90280-04M04	321-371
REC90280-04M04		154-155-156
REC90280-04M04	90280-04M04-00	373
REC90280-04M05	90280-04M05	155-156-157-325-329-333-339-377-381-385-386
REC90280-05049	90280-05049	229
REC90282-04010	902082-04010	365
REC90282-04010	90282-04010	315-319-323-353-357-359-369-371-373-375
REC90282-04M00	90282-04M00	327
REC90340-08002	6E0-45316-09	346

REF	R.O. / OEM	
REC90340-08002	90304-08002	327-331-335-337-341
REC90340-08002	90340-08002	283-285-287-289-291-293-295-297-299-303-307-311-315-319-323-345-350-353-357-361-363-369-370-373-379-383
REC90340-08002	90340-08014	348-359
REC90340-08002	90340-08M04	295-343-347-365-375
REC90381-20001	90381-20001	133
REC90386-18M63	90386-18M63	133
REC90386-22M13	90386-22M13	133
REC90386-22M98	90386-22M98	133
REC90386-25M31	90386-25M31	133
REC90386-30M77	90386-30M77	133
REC90386-38M89	90386-38M89	133
REC90387-32002	90387-32002	229
REC90389-22M01	90389-22M01	299-303-307-311-361-365-405
REC90389-25M00	90389-25M00	315-319-371-405
REC90430-06M03	90430-06M03	209-211-213-214-347-363-365
REC90430-08020	90430-08003	292-303-307-311-315-323
REC90430-08020	90430-08020	283-285-287-289-291-299-327-331-335-337-341-343-345-346-347-348-350-353-355-357-359-361-363-365-369-370-375-379-383-386
REC90430-08020	93210-06ME6	295
REC90430-08020		64-65-66-67-68-69-70-71-72-73
REC90430-08020	90430-08020-00	373
REC90430-12072	90430-12072	301-305-309-361-367-371
REC90430-12072	90430-12072-00	373
REC90480-18065	90480-18065	235-239
REC90480-20M05	90480-20M05	139-209-211-243-245-247
REC90501-10M77	90501-10M77	331-335-337-341-383
REC90501-11M10-00	90501-11M10	329-333-339-381-385
REC90501-12M48	90501-12M48	315-319-373
REC90501-14M02	90501-14M02	235
REC90501-16233	90501-16233	369-371
REC90501-16M01	90501-16M01	359-365
REC90501-16M11	90501-16M11	139-209-211-243-245-247
REC90501-16M37	90501-16M37	323-327-375-379
REC90501-450A2	90501-450A2	339
REC90794-46866	907-94469-05	78
REC90794-46868	907-94469-13	78
REC91490-30025	91490-30020	289-291-293-351
REC91490-30025	91490-30025	299-303-307-311-315-357-361-365
REC91490-30025		64-65-67-68-69-405
REC91490-30030	91490-30030	353-359-405
REC91490-30040	91490-30040	343
REC91490-40030	91490-40025	319-369-371
REC91490-40030	91490-40030	323-327-331-335-337-341-375-379-383
REC91490-40030		68-69-70-71-72-73-405
REC91490-40030	91490-40030-00	373
REC92990-16200	92990-16200	359-369-405
REC92990-18200	92990-18200	323-327-331-335-337-375-379-405
REC93101-10M14	93101-10M14	345
REC93101-10M25	93101-10M25	221
REC93101-11M23	93101-11M23	289-346
REC93101-12M70	93101-12M70	341
REC93101-13018	93101-13018	227
REC93101-13M12	93101-13M12	287-345
REC93101-13M27	93101-13M27	270
REC93101-14M01	93101-14M01	225
REC93101-15074	93101-15074	289-346-347
REC93101-16001	93101-16001	229-233
REC93101-17054	93101-17054	291-293-349-351
REC93101-18050	93101-18050	347
REC93101-20048	93101-20001	292
REC93101-20048	93101-20048	291-349-351-363

REF	R.O. / OEM	
REC93101-20M07	93101-20M07	295-353-355-357
REC93101-20M29	93101-20M29	221-225
REC93101-20M34	93101-20M34	223
REC93101-22067	93101-22067	353-355-359-365-367-369
REC93101-22M00	93101-22067	297
REC93101-22M00	93101-22M00	299-303-307-311-361-363
REC93101-22M15	93101-22M15	245-247
REC93101-22M60	93101-22M60	301-305-361
REC93101-23070	93101-23070	317-357-359-369
REC93101-25018	93101-250-18	227
REC93101-25M03	93101-25M03	315-319-321-371
REC93101-25M03	93101-25M03-00	373
REC93101-25M35	93101-25M28	231
REC93101-25M57	93101-25M57	309-313
REC93101-28M16	93101-28M16	325-329-333-335-339-377-381-385-386
REC93101-30002	93101-300002	335-337
REC93101-30M17	93101-30M17	323-327-331-375-379-383
REC93101-30M33	93101-30M33	235
REC93102-15M32	93102-15M32	220
REC93102-20M25	93102-20M25	223-225
REC93102-23096	93102-23096	237
REC93102-25008	93102-25008	229
REC93102-25M28	93102-25M28	237
REC93102-25M48	93102-25M48	227
REC93102-26M27	93102-26M27	231
REC93102-28135	93102-28135	239
REC93102-30M05	93102-30M05	243
REC93102-30M23	93102-30M23	241
REC93102-30M56	93102-30M56	233
REC93102-32M07	93102-32M07	229-239
REC93102-35M13	93102-35M13	245-247
REC93102-35M18	93102-35M18	235
REC93102-36M02	93102-36M02	243
REC93102-36M24	93102-36M24	241
REC93102-38008	93102-38008	211-213
REC93102-38008	93102-38M59	209
REC93102-40M14	93102-40M14	245-247
REC93102-48009	93102-48009	209
REC93102-60004	93102-60004	211
REC93102-63004	93102-63008	213
REC93103-10052	93103-10052	343
REC93103-11051	93103-11051	343
REC93104-16M01	93104-16M01	235-237
REC93104-16M01	93104-16M04	231
REC93104-18049	93104-18049	239
REC93104-20M02	93104-20M02	243
REC93104-22M07	93104-22M07	335
REC93106-09014	93106-09014	305-309-313-317-321-325-329-333-335-339-369-371-377-381-385
REC93106-09014	93106-09014-00	373
REC93106-18M01	93106-18M01	241
REC93109-44M00	93109-44M00	131
REC93110-23M00	93110-23M00	227
REC93210-06ME6	93210-06ME6	289-291-292-297-301-351-361
REC93210-07540	93210-07003	329
REC93210-19MJ1	93210-19MJ1	211-213
REC93210-22M02	93210-22M02	235
REC93210-25552	93210-25552	211-213
REC93210-32738		65-66-68-69
REC93210-33MG4	93210-33MG4	301-305-309-313-361
REC93210-37160	93210-37160	325-329-333-335-339-341-377-381
REC93210-37M67	93210-37M67	385-386
REC93210-41042	93210-41042	357-359-367-369
REC93210-42101	93210-42101	343
REC93210-42159	93210-42159	223-225-231-239
REC93210-42M70	93210-42M70	225
REC93210-44398	93210-44398	154-155-289-291
REC93210-45161		155
REC93210-46044	93210-46044	317-321-371
REC93210-46044	93210-46044-00	373
REC93210-46M16	93210-46M16	227-229-241-243
REC93210-48214	93210-48214	287-341-345
REC93210-48MG8	93210-48MG8	301-309-361
REC93210-49046	93210-49046	154-289-293-317-321-346-359-369-371

REF	R.O. / OEM	
REC93210-49046	93210-49046-00	373
REC93210-53M08	93210-53M08	289-346
REC93210-54534	93210-54534	333-339-385
REC93210-54534	93210-55M14	325-329-377-381
REC93210-54M54	93210-54M54	223
REC93210-57M00	93210-57M00	363
REC93210-57M09	93210-57M09	291-293-349-351
REC93210-58677	93210-58144	325-329-377-381
REC93210-58677	93210-58677	347
REC93210-58M21	93210-58M21	229-237
REC93210-59MG7	93210-59MG7	154-156-301-305-309-313-361
REC93210-60MA3	93210-60MA3	357
REC93210-62269	93210-62269	239-243
REC93210-64ME7	93210-64ME7	295-355
REC93210-65752-00	93210-64488	333-335
REC93210-65M50	93210-65M50	233-235-241-295-355
REC93210-66M98	93210-66M98	359-365-369
REC93210-69MG6	93210-69MG6	299-303-307-311-341-361
REC93210-74M35	93210-74M35	245-247
REC93210-74MG5	93210-74MG5	299-303-311-361
REC93210-85M97	93210-85M97	371
REC93210-85M97	93210-85M97-00	373
REC93210-86M38	93210-86M38	155-156-157-325-329-333-339-377-381-385-386
REC93210-86M39	93210-86M39	315-319-323-375
REC93210-94003	93210-94003	335-341
REC93210-97M55	93210-97M55	327-379
REC93211-04001	93211-04001	245-247
REC93211-04384	93211-04384	331-337-383
REC93304-205U0		257
REC93306-001U1	93306-001U1	299-303-307-311-361-394-395-396
REC93306-00501	93306-00501	291-293-349-351-393-394
REC93306-00519	93306-00519	347-393
REC93306-00612	93306-00612	353-355-357-394-395
REC93306-00702	93306-00702	359-365-369-394-395-396
REC93306-204U0	93306-204U0	221-223
REC93306-204U0	93306-240U0	225
REC93306-204U0		257
REC93306-204Y7	93306-20401	363
REC93306-205U2		257
REC93306-205U7	93306-205U7	227-257
REC93306-206U5	93306-206U5	243-258
REC93306-207U0	93306-207U0	315-319-371
REC93306-207U0		395-396-397
REC93306-207U0	93306-207U0-00	373
REC93306-208U0	93306-208U0	245-247-258-259-323-375-393-397
REC93306-209U0	93306-209U0	327-335-379-397-398-399-400
REC93306-209U1		259
REC93306-210U0	93306-210U0	331-337-383-399-400
REC93306-304U0		257
REC93306-30510		257-258
REC93306-305U3	93306-305U3	229-231-257-258
REC93306-305U8	93306-305-U8	237-258
REC93306-306V1	93306-303V1	235
REC93306-306V1	93306-306V1	241
REC93306-306V1		257-258
REC93306-306V5	9306-306V5	233-258
REC93306-307U0	93306-307U0	233-235-258
REC93310-112V0	93310-112V0	221-223-257-262
REC93310-32337	93310-32337	247-265
REC93310-32337	93310-323V6	245
REC93310-32337	93603-21111	265
REC93310-32337		258-259
REC93310-32668	93310-32668	247
REC93310-326V4		259
REC93310-418U0	93310-418U0	225-257
REC93310-418V1	93310-418V1	221-223-257
REC93310-522W0		257-258
REC93310-527W1		258
REC93310-620V5	93310-620V5	227-257
REC93310-624U5	93310-62406	229-257-258
REC93310-636U4	93310-636U4	243-258
REC93310-727U0	93310-727U0	233-258
REC93310-727V7	93310-727V7	235-258

REF	R.O. / OEM	
REC93310-730V6		258
REC93310-730V8	93310-730V8	239-243-258
REC93310-835U8	93310-835U8	243-258
REC93310-836U0		258-259
REC93310-836V2	93310-836V2	245-247-258-259
REC93310-954U1	93310-954U1	245-247-258-259
REC93310-954V3		258-259
REC93310-959U0	93310-959U0	247
REC93311-632U1	93311-632U1	239-258
REC93311-632U7	93311-632U7	231-257
REC93311-632V4		257-258
REC93311-636U6	93311-636U6	241-257-258
REC93311-83280	93311-83280	331-335-337-383-399-400
REC93311-832U4	93311-832U4	239-258
REC93311-85894	93311-85894	335
REC93311-928U5	93311-928U5	329-381-397-398-399-400
REC93311-940U3	93311-940U3	245-247-258-259
REC93311-940V0	93311-940V0	247
REC93315-017U4	93315-017U4	353-394-395
REC93315-217U0	93315-217U0	363-395
REC93315-22004	93315-22004	295-353-355-357-394-395
REC93315-220V7	93315-220V7	355-357-394-395
REC93315-314V8	93315-314V8	291-292-351-393-394
REC93315-317U2	93315-317U2	291-293-349-351-393-394
REC93315-32224	93315-32224	301-305-309-313-359-361-367-369-394-395-396
REC93315-324U1	93315-324U1	363-395
REC93315-325V1	93315-325V1	371
REC93315-325V1		394-395-396
REC93315-325V1	93315-325V1-00	373
REC93315-425U7	93315-425U7	323-375-396-397
REC93315-425V3	93315-425V3	327-379-397-398-399-400
REC93315-43061	93315-43061	327-331-335-379-383-397-398-399-400
REC93315-430U8	93315-430U8	323-375-396-397-398-399-400
REC93315-430V5		396-397-398-399-400
REC93315-628U9	93315-628U9	325-377-396-397-398
REC93317-22204	93317-22204	299-303-307-311-359-361-365-369-394-395-396
REC93317-322V0	93317-322V0	315-319-396-397
REC93317-325U0	93317-325U0	315-319-371
REC93317-325U0	93317-325U0-00	373
REC93317-325U0		396-397
REC93317-330U2	93317-330U2	325-329-333-339-377-381-385-396-397-398-399-400
REC93332-00001	93332-00001	301-305-309-313-357-361-369-394-395-396
REC93332-00003	93332-00003	299-303-307-361-365-369-394-395-396
REC93332-00005	93332-00005	291-293-295-349-351-353-355-393-394-395
REC93332-00023		394-395-396
REC93332-00048	93332-00048	327-331-397-398-399-400
REC93332-000A5	93332-000A5	335
REC93332-000U0	93332-000U0	363-395
REC93332-000U3	93332-000U3	317-321-371
REC93332-000U3		396-397
REC93332-000U3	93332-000U3-00	373
REC93332-000U5		396
REC93332-000U7	93332-000U7	323-375-396-397
REC93332-000UE	93332-000UE	233-235-258
REC93332-000V3	93332-000V3	327-379-397-398-399-400
REC93332-000W1	93332-000W1	331-337-383-399-400
REC93332-000W5	93332-000WS	355-394-395
REC93332-000W7	93332-000W7	371
REC93332-000W7		394-395-396
REC93332-000W7	93332-000W7-00	373
REC93340-67011	93340-67011	335-341
REC93341-214U1	93314-314V8	291
REC93341-214U1	93341-214U1	348

REF	R.O. / OEM	
REC93341-214U1		393-394
REC93341-41414	93341-41414	351-393-394
REC93341-93020	93341-93020	333-385
REC93341-93020	93341-930U9	339
REC93341-930V2	93341-930V2	325-329-377-381-396-397-398-399-400
REC93342-624U0	93342-624U0	363
REC93390-000U0	93390-000UO	363-395
REC93390-000U2		397-398-399
REC93399-99951	93399-99951	229-257
REC93440-52009	93440-52008	227
REC93440-68M03	93440-68M03	233-235
REC93450-13022	93450-13022	221-223-225-262
REC93450-15023	93450-15023	227-262
REC93501-04011	93501-04011	331-335-337-341-383
REC93503-16003	93503-16003	315-319-323-327-373-375-379
REC93507-32031	93507-32009	323-327
REC93507-32031	93507-32031	375-379
REC93511-32027	93511-32017	327
REC93511-32027	93511-32027	323-375-379
REC93602-14104	93602-14104	227-257-262
REC93602-14118	93602-14118	225-257-262
REC93602-18M12	93602-18M12	229
REC93602-20M02	93602-20M02	229-237-257-258-263-264
REC93603-18M09	93603-18M09	241-257-258-262-264
REC93603-21111	93603-21111	233-235-239-243-258-259-263-264-265
REC93606-12019	90606-12019	205
REC93606-12019	93606-11M24	297
REC93606-12019	93606-12019	187-195-201-203-207-209-211-213-214-221-227-229-231-237-299-303-307-311-315-319-325-329-333-335-339-341-349-367-371-377-381-385
REC93606-12019	93606-42019	386
REC93608-12M05	93608-12M05	323-331-337-341-383
REC95380-06700	95380-06700	301-361
REC97075-10040	97075-10040	299-303-307-311-319-369-370
REC97080-08045	97080-08045	289-291-351
REC97095-06040	97095-06040	347-355
REC97095-06045	97095-06045	211-287-346
REC97095-08045	97095-08045	293-363-367-369
REC97095-08045	97395-08045	359
REC97095-08055	97095-08055	363-367-369
REC97095-08055	97395-08055	359
REC97395-08070	97395-08070-00	373
REC99001-06600	99001-06600	287-346
REC99001-08600-00	99001-08600	305-309-313-317-321-325-329-333-335-339-369-371-377-381-385
REC99590-10114	99590-10114	337-383
REC99999-02808	99999-02808	134
RECK0A-A3721-00	K0A-A3721-00	209
RECK0A-A3722-00	K0A-A3722-00	209
RECKITF100D		70
RECKITF100F		70
RECKITF115A		70
RECKITF115B		71
RECKITF150CR		71
RECKITF150G		72
RECKITF150RR		71
RECKITF15C		65
RECKITF2.5A		64
RECKITF2.5B		64
RECKITF200A		72
RECKITF200C		72
RECKITF20A		65
RECKITF20B		65
RECKITF225B		72
RECKITF225C		73
RECKITF250D		73
RECKITF25A		66
RECKITF25D		66
RECKITF25G		66
RECKITF300A		73
RECKITF30A		67

REF	R.O. / OEM	
RECKITF30B		67
RECKITF350A		73
RECKITF40B		67
RECKITF4A		64
RECKITF50A		67
RECKITF50F		68
RECKITF5A		64
RECKITF60A		69
RECKITF6A		64
RECKITF6C		64
RECKITF70A		69
RECKITF80A		69
RECKITF80B		70
RECKITF9.9C		65
RECKITFT25B		66
RECKITFT25F		66
RECKITFT50B		68
RECKITFT50C		68
RECKITFT50G		68
RECKITFT60B		69
RECKITFT8D		65
RECN26-13440-00	N26-13440-00	83-214
RECN26-13440-00	N26-13440-02	83
RECN26-13440-00		73-83
RECOBBRACKET		77
RECOBELEMENT		78
RECOBFILTER		78
RECPIN4		125
RECPIN4.5		125
RECPIN6		125
RECTOOLTRIM1		125
RECTOOLTRIM2		125
RECTOOLTRIM3		125
RECTOOLTRIMKIT		125
RECYS-225-15		78
RM35-802893Q		78
RM92-858026QB1U6	92-858026QB1	84
RM92-858027QB1U3	92-858027QB1	84
RM92-8M0086220U6	92-8M0086220	84
RM92-8M0086221U3	92-8M0086221	84

S

SIE18-8013		74
SIE18-8015		74
SOL2011-083-08P		402
SOL3011-073-05S	6L5-45949-00-EL	402
SOL3011-075-07S	6E0-45943-01-EL	402
SOL3011-085-07	6G1-45947-00-EL	402
SOL3011-085-08	6G1-45943-00-EL	402
SOL3011-085-09	6G1-45941-00-EL	402
SOL3011-090-07-P	647-45943-00-EL	402
SOL3111-093-07		402
SOL3111-093-08	683-45947-00-EL	402
SOL3111-093-09	683-45945-00-EL	402
SOL3111-093-10	683-45942-00-EL	402
SOL3111-093-11	683-45943-00-EL	402
SOL3111-093-12	683-45941-00-00	402
SOL3211-099-09	664-45941-01-EL	402
SOL3211-099-10	664-45945-00-EL	402
SOL3211-099-11	664-45947-01-EL	402
SOL3211-099-12	664-45954-00-EL	402
SOL3211-099-13	664-45949-02-EL	402
SOL3231-101-13	MAR-6YT30-02-12	402
SOL3231-103-12	664-45970-00-98	402
SOL3231-105-11	664-45972-00-98	402
SOL3231-108-10		402
SOL3311-110-15	663-45943-02-EL	402
SOL3311-110-16	663-45949-01-EL	402
SOL3311-110-17	663-45941-01-EL	402
SOL3311-111-13	663-45945-02-EL	402
SOL3311-111-14	663-45958-01-EL	402
SOL3311-114-12	663-45952-02-EL	402
SOL3311-115-10-P		402
SOL3311-115-11-P		402
SOL3311-115-12-P		402
SOL3311-116-11	663-45947-02-EL	402
SOL3311-121-09	663-45956-01-EL	402
SOL3331-111-13		402
SOL3331-111-14		402
SOL3331-114-12		402
SOL3331-116-11		402
SOL3331-119-10		402
SOL3411-130-19	6E5-45941-00-EL	402
SOL3411-130-21	6E5-45943-00-EL	402
SOL3411-133-17	6E5-45945-00-EL	402
SOL3411-135-15	6E5-45947-00-EL	402

REF	R.O. / OEM	
SOL3411-138-13	6E5-45949-00-EL	402
SOL3411-140-11	6E5-45954-00-EL	402
SOL3412-133-17		402
SOL3412-135-15		402
SOL3412-138-13		402
SOL3413-125-19	6E5-45941-00-EL	402
SOL3413-125-21	6E5-45943-00-EL	402
SOL3413-128-17	6E5-45945-00-EL	402
SOL3413-130-15	6E5-45947-00-EL	402
SOL3413-133-13	6E5-45949-00-EL	402
SOL3431-130-19	688-45970-03-98	402
SOL3431-130-21	688-45972-02-98	402
SOL3431-133-17	688-45930-02-98	402
SOL3431-135-15	688-45978-60-98	402
SOL3432-130-19		402
SOL3432-133-17		402
SOL3511-142-23	6G5-45949-00-98	403
SOL3511-143-21	6G5-45949-00-98	403
SOL3511-145-19	6G5-45945-01-98	403
SOL3511-148-17	6G5-45947-01-98	403
SOL3511-150-15	6G5-45941-00-98	403
SOL3512-142-23	6G5-45949-00-98	403
SOL3512-143-21		403
SOL3512-145-19	6K1-45945-01-98	403
SOL3512-148-17	6K1-45947-00-98	403
SOL3512-150-15	6G5-45952-00-98	403
SOL3513-140-21	6G5-45949-00-98	403
SOL3513-143-19	6G5-45945-01-98	403
SOL3513-145-17	6G5-45947-01-98	403
SOL3513-148-15	6G5-45941-00-98	403
SOL3514-140-21		403
SOL3514-143-19	6K1-45945-01-98	403
SOL3514-145-17	6K1-45947-00-98	403
SOL3514-148-15	6G5-45952-00-98	403
SOL3531-140-19	6G5-45974-03-98	403
SOL3531-140-21	6G5-45972-02-98	403
SOL3531-140-23	6G5-45976-01-98	403
SOL3531-143-17	6G5-45978-03-98	403
SOL3531-145-15	6G5-45970-02-98	403
SOL3532-140-19	6K1-45974-02-98	403
SOL3532-140-21	6K1-45972-01-98	403
SOL3532-140-23	6K1-45976-00-98	403
SOL3532-143-17	6K1-45978-02-98	403
SOL3532-145-15	6K1-45970-01-98	403
SOL3571-145-25		403
SOL3571-145-27		403
SOL3571-148-23	6G5-45949-00-98	403
SOL3571-150-21	6G5-45949-00-98	403
SOL3571-153-19	6G5-45945-01-98	403
SOL3571-155-17	6G5-45947-01-98	403
SOL3571-158-15	6G5-45941-00-98	403
SOL3572-148-23		403
SOL3572-150-21		403
SOL3572-153-19	6K1-45945-01-98	403
SOL3572-155-17	6K1-45947-00-98	403
SOL3572-158-15	6G5-45952-00-98	403
SOL9311-110-15		404
SOL9311-111-13		404
SOL9311-111-14		404
SOL9311-114-12		404
SOL9311-116-11		404
SOL9311-120-10		404
SOL9311-121-09		404
SOL9331-110-15		404
SOL9331-111-13		404
SOL9331-111-14		404
SOL9331-114-12		404
SOL9331-116-11		404
SOL9411-132-19		404
SOL9411-132-21		404
SOL9411-133-17		404
SOL9411-135-15		404
SOL9411-138-13		404
SOL9411-140-09		404
SOL9411-140-11		404
SOL9431-130-19		404
SOL9431-130-21		404
SOL9431-133-17		404
SOL9431-135-15		404
SOL9431-138-13		404
SOL9432-130-19		404
SOL9432-133-17		404
SOL9432-135-15		404
SOL9432-138-13		404
SOL9511-143-21		404

REF	R.O. / OEM	
SOL9511-145-19		404
SOL9511-148-17		404
SOL9511-150-15		404
SOL9511-153-13		404
SOL9511-155-11		404
SOL9511-160-13		404
SOL9531-140-19		404
SOL9531-140-21		404
SOL9531-140-23		404
SOL9531-143-17		404
SOL9531-145-15		404
SOL9532-140-19		404
SOL9532-140-21		404
SOL9532-140-23		404
SOL9532-143-17		404
SOL9532-145-15		404
SOL9571-145-25		404
SOL9571-148-23		404
SOL9571-150-21		404
SOL9571-153-19		404
SOL9571-155-17		404
SOL9571-158-15		404
SOL9572-145-25		404
SOL9572-148-23		404
SOL9572-150-21		404
SOL9572-153-19		404
SOL9572-155-17		404
SOL9572-158-15		404
SOLRBX-102		405
SOLRBX-103		405
SOLRBX-108		405
SOLRBX-117		405
SOLRBX-127		405
STA93900		136
STA93922		136
STA93932		136
STA94100		136

T

TEN01100	664-45371-01	164-169
TEN01101	679-45371-00	164-169-365-369
TEN01102		164
TEN01103	6L6-45371-00	164-169
TEN01104	688-45371-02	164-169
TEN01105	6E5-45251-00	164-169
TEN01106	6E8-45251-00	164
TEN01107		165
TEN01108	6G1-45251-02	165-169
TEN01109		163-169
TEN01110	688-45251-01	163-169
TEN01111		163
TEN01112	6G5-45251-01	166
TEN01112	6G5-45251-02	166
TEN01112		169
TEN01112-1	6AW-45251	166-169
TEN01113	6H1-45251-03	166-169
TEN01114		167
TEN01115	6H1-45251-02	166-169
TEN01116	6B4-45251-00	348
TEN01116	6E8-45251-02	164
TEN01116		169
TEN01117	6L5-45251-02	166-169
TEN01118	6G1-45251-03	164
TEN01118	6N0-G5251-00	346
TEN01118		169
TEN01119	6T5-45371-00	165
TEN01120	6T5-45373-00	166
TEN01121	689-11325-00	167-229
TEN01122	6T4-45836-00	164
TEN01123	65W-45251-00	164
TEN01123	6E0-45251-11-00	164
TEN01123		169
TEN01124	61A-45371-00	165-169
TEN01125	6H1-45251-01	167
TEN01126		167
TEN01127	676-45251-00	166-233-235
TEN01128	682-45251-00	166
TEN01129	6E5-45251-00	165
TEN01130	61N-45371-00	165-355
TEN01131	63D-45251-00	165
TEN01131	63D-45251-01	165
TEN01131		169
TEN01132	63D-45251-10	163
TEN01132	67C-45251-00	163
TEN01132		169

REF	R.O. / OEM	
TEN01133	6J9-45371-01	165-169
TEN01134	6K1-45371-02	165-169
TEN01135	61N-45251-01	163-169
TEN01136	66M-45371-00	65-164-169
TEN01137	6G8-45251-00	164-169
TEN01138	6AV-45251-00	164
TEN01138	6V3-45251-01	164
TEN01139	6T5-45251-00	167
TEN01140	67F-45371-00	165
TEN01141	67F-45371-00	165-169
TEN01142	68T-45251-00	163-169
TEN01143	6J9-45371-00	165
TEN01144	6K1-45371-00	168-169
TEN01145	69L-45371-00	168-169
TEN01146	67F-11325-00	163
TEN01146-1	67F-11325-01	163
TEN01147	688-11325-00	163-237-243
TEN01148	6G8-11325-00	163-169
TEN01149	62Y-11325-00	163
TEN01150	6J8-11325-00	163-229-231
TEN01151	66M-11325-00	163
TEN01152	6E5-11325-00	163-169-245-247
TEN01153	6E5-45371-00	164
TEN01153	6E5-45371-10	370-375
TEN01154		169
TEN01154AL	6AH-45251-00	65-165-293
TEN01155		169
TEN01155AL	6AW-45373-00	166
TEN01156	68V-11325-02	72-167
TEN01156-1	68V-11325-01	167
TEN01157	6U0-45251-00	165-169
TEN01158	6U4-45373-00	166-169
TEN01159	6U4-45251-00	167-169
TEN01160T	N51-11325-01	167
TEN01161	6BL-11325-00	166
TEN01162	682-11325-00	166-227
TEN01163	68T-11325-00	166
TEN01164	63P-11325-11-00	166-169
TEN01165	63P-11325-21	211
TEN01165	63P-11325-21-00	163
TEN01165		70-71
TEN01166	664-11325-00	225
TEN01166	676-11325-00	166-233-235
TEN01167	63P-11325-01-00	166-169
TEN01168	61A-11325-00	163
TEN01169	6AW-45619-00	165
TEN01170	6AW-11325-00	214
TEN01170	6AW-1132S-00	167
TEN01170		73-169
TEN01171	6AQ-1132N-00	73-167-169
TEN01172	6AW-1132R-00	73-167-169-214
TEN01173	6AW-1132L-00	73-167-169
TEN01174	6AW-1132U-00	73-167
TEN01175	6AW-1132T-00	73-167-169
TEN01176	6AW-1132M-00	167-169
TEN01177	6AW-1132P-00	73-168-169-214
TENKITYAMAHA150-200		168
TENKITYAMAHA150-200C		168
TENKITYAMAHA200-250		168
TENKITYAMAHA200-300		168
TENKITYAMAHA40-60		168
TENKITYAMAHA60-90		168
TRI305-0386		74
TRI305-0566		74

R0 / OEM --> REF

REF	R.O. / OEM	
137-11633-10	PAF20-05020003	189-219
30X-12117-00	PAF15-07040006	185-189-193-195-199-201-203-207
30X-12118-00	PAF15-07040007	185-189-193-195-199-201-203-207
3FV-13440-00	REC3FV-13440-00	83
3FV-13440-10	REC3FV-13440-00	83
3FV-13440-20	REC3FV-13440-00	83
3FV-13440-30	REC3FV-13440-00	83
3YF-12113-00	PAF20-05030004	189
41106-ZW-000	CM41106-ZW000	158
50M-14355-00	REC50M-14355-00	99
51Y-12114-00	PAF25-05050005	193-195-199-201-203-207
51Y-12119-00	PA166F-010003	173-180-189-195-201
51Y-12119-00	PAF166-010003	179-193
51Y-12119-00	PAPS2700.04.03	175-185-199-203-205-207-213
5GH-13440-00	PAF15-07010023	183
5GH-13440-00	PAF25-05000100	191
5GH-13440-00	REC5GH-13440-00	83-183-191-197-209
5GH-13440-10	REC5GH-13440-00	207
5GH-13440-20	REC5GH-13440-60	195-203
5GH-13440-30	REC5GH-13440-00	83
5GH-13440-50	REC5GH-13440-60	83-201-205
5GH-13440-60	REC5GH-13440-60	83-187
5GH-13440-70	REC5GH-13440-00	83
60E-81950-00	REC60E-81950-00	115
60H-12416-00	REC60H-12416-00	245-247
60R-12113-00	PAF6-04050003	179
60R-E2414-A0	REC6G8-12414-A0	180
60R-G6241-00	REC68T-46241-00	180
60V-11181-00	REC60V-11181-00	249-254
60V-12411-00	REC60V-12411-00	70-137
60V-13621-A0	REC60V-13621-A0	276
60V-13645-00	REC60V-13645-00	276
60V-13907-00	REC60V-13907-00	86
60V-24251-01	REC60V-24251-01	82
60V-43880-00	PH200-T069	123
60V-44150-00	REC60V-44150-00	385
60V-45113-02	REC60V-45113-02	253-254
60V-45300-20-8D	REC421-A25	281
60V-45332-00-94	REC60V-45332-00-94	383
60V-45611-00	REC60V-45611-00	383
60V-81800-00	PH130-0076	112
60V-81950-00	REC60V-81950-00	115
60V-81960-00	REC60V-81960-05	117
60V-81960-01	REC60V-81960-05	117
60V-81960-02	REC60V-81960-05	117
60V-81960-03	REC60V-81960-05	117
60V-81960-04	REC60V-81960-05	117
60V-81960-05	REC60V-81960-05	117
60W-45300-20-8D	REC428-A25	281
60X-44315-A0	REC60X-44315-A0	339-386
60X-81800-00	PH130-0076	112
60X-W0078-00	REC60X-W0078-00	153-157-386
612-45611-00	REC6L2-45611-00	295
61A-11193-A2	REC61A-11193-A2	255
61A-11325-00	CM61A-11325-00	161
61A-11325-00	TEN01168	163
61A-11381-A0	REC61A-11381-A0	276
61A-12414-A0	REC61A-12414-A0	138-231
61A-13411-00	REC61A-13411-00	83
61A-13621-A0	REC61A-13621-A0	276
61A-13645-00	REC61A-13645-00	276
61A-13646-00	REC61A-13646-00	276
61A-24563-00	REC61A-24563-00	81-82
61A-43880-00	PH200-T050	124
61A-43880-01	PH200-T050	124
61A-44311-00	REC61A-44311-00	385
61A-44311-01	REC61A-44311-00	325-329-333-339-377-381-386
61A-44322-02	REC61A-44322-02	155-156-157-325-329-333-339-377-381-386
61A-45113-A0	REC61A-45113-A0	253-254
61A-45214-10	REC61A-45214-10	383
61A-45214-11	REC61A-45214-10	331
61A-45215-10	REC61A-45215-10	383
61A-45215-11	REC61A-45215-10	331
61A-45321-01	REC61A-45321-01	333-385
61A-45331-00-94	REC61A-45331-00-94	333-385-386
61A-45371-00	CM61A-45371	160-169-383

REF	R.O. / OEM	
61A-45371-00	CM61A-45371-00A	160-169-331-335-337
61A-45371-00	TEN01124	165-169
61A-45376-00	REC61A-45376-00-94	333-339
61A-45376-00-94	REC61A-45376-00-94	341-385
61A-45501-20	REC61A-45501-20	385
61A-45501-30	REC61A-45501-30	385
61A-45527-00	REC61A-45527-00	325-329-333-377-381-385
61A-45538-00	REC61A-45538-00	325-329-333-377-381-385
61A-45567-00	REC61A-45567-00/60-0	331-337
61A-45577-00	REC61A-45577-00/60-0	331-337
61A-45587-00	REC61A-45587-00/60-0	333-339
61A-45587-00/60	REC61A-45587-00/60-0	385
61A-45631-03	REC61A-45631-03	383
61A-45632-00	REC61A-45632-00	331-337-383
61A-45633-00	REC61A-45633-00	331-337-383
61A-45634-01	REC61A-45634-01	331-337-341-383
61A-45635-00	REC61A-45635-00	331-335-337-341-383
61A-45641-02	REC61A-45641-02	331-337-383
61A-81800-00	PH130-0059	110
61A-81800-01	PH130-0059	110
61A-81941-00	REC61A-81941-00	114
61A-81950-00	REC61A-81950-01	115
61A-81950-01	REC61A-81950-01	115
61A-81960-00	REC61A-81960-04	117
61A-81960-01	REC61A-81960-04	117
61A-81960-02	REC61A-81960-04	117
61A-81960-03	REC61A-81960-04	117
61A-81960-04	REC61A-81960-04	117
61A-85885-00	REC6X2-85885-10	103
61A-W0001-A1	REC61A-W0001-01	252-254
61A-W0078-01	REC61A-W0078-A1	153
61A-W0078-A1	REC61A-W0078-A1	328-383
61A-W0078-A3	REC61A-W0078-A1	333
61A-W0093-01	REC61A-W0093-01	97
61B-82510-01	REC61B-82510-02	113
61H-81800-00	PH130-0051	110
61H-81800-01	PH130-0051	110
61N-11181-A1	REC61N-11181-00	229
61N-11181-A2	REC61N-11181-00	248
61N-11515-00	REC61N-11515-00	229
61N-11603-00	REC61N-11603-00	229-263-266
61N-11604-00	REC61N-11604-00	229-263
61N-11605-00	REC61N-11605-00	229-263
61N-1163-00	REC61N-11636-00K	229
61N-11631-00-95	REC61N-11631-00K	229-263-266
61N-11635-00	REC61N-11635-00K	229-263
61N-11636-00	REC61N-11636-00K	263
61N-14198-00	REC61N-14198-00	274
61N-24521-00	PAF15-07080002	80
61N-24560-00	PAF15-07080000	80
61N-24563-00	REC61N-24563-10	80
61N-24563-10	REC61N-24563-10	80-82
61N-26311-00	REC61N-26311-00	129
61N-44146-00	REC61N-44146-00	361
61N-44311-01	PAF25-04050001	148-154-155-297-355
61N-44322-01	REC61N-44322-00	154-155-297-355
61N-44323-00	REC61N-44323-00	149-154-155-297-355
61N-44362-00	PAF25-04000017S	297-355
61N-44362-10	PAF25-04000017	297-355
61N-45127-00	PAF25-04000013	297-355
61N-45214-00	PAF25-04000021	295
61N-45251-00	PAF15-06000004	295
61N-45251-01	CM61N-45251-01	160-169-291-351-355
61N-45251-01	CM61N-45251-01A	160
61N-45251-01	TEN01135	163-169
61N-45311-02-4D	PAF25-04000001	295
61N-45315-00	PAF25-04000009	297-355
61N-45361-01-4D	PAF25-04070001	295-355
61N-45371-00	TEN01130	165-355
61N-45510-00	PAF25-04010000S	297
61N-45510-00	REC61N-45510-00	355-388-389
61N-45510-10	PAF25-04010000L	297
61N-45510-10	REC61N-45510-10	355-388-389
61N-45536-00	PAF25-04000002	297-355
61N-45551-00	PAF25-04000005	295
61N-45551-00	REC61N-45551-00	355-388-389
61N-45560-00	REC61N-45560-10	295
61N-45560-10	REC61N-45560-10	355
61N-45571-00	PAF25-04070004	295
61N-45571-00	REC61N-45570-00	355-388-389

REF	R.O. / OEM	
61N-45587-00-10	PAF25-04000003-2	297
61N-45587-00-11	PAF25-04000003-3	297
61N-45587-00-12	PAF25-04000003-4	297
61N-45587-00-13	PAF25-04000003-5	297
61N-45587-00-14	PAF25-04000003-6	297
61N-45587-00-15	PAF25-04000003-7	297
61N-85540-00	REC61N-85540-00	119
61N-85570-00	REC61N-85570-01	105
61N-85570-01	REC61N-85570-01	105
61N-W0001-E1	REC61N-W0001-E1	145-354
61N-W0078-10	REC61N-W0078-11	150
61N-W0078-11	REC61N-W0078-11	150-297-354
61N-W0093-00	REC61N-W0093-00	93-96-229
61P2-W0078-00	REC6P2-W0078-00	336
61T-11193-A1	REC61T-11193-A0	229-254
61T-45113-A0	REC61T-45113-A0	253
61T-W0001-02	REC61T-W0001-02	229-250-254-266-267
624-14485-00	PAT15-04010202	235
624-14485-00	REC624-14485-00	221-225-227-231-233-237-239-241-243
624-24634-00	PAF4-04120103	75
626-14390-90	REC626-14390-90	98
626-44365-01	REC626-44365-01	349-353
626-45316-09	REC626-45316-09	291-292-349
626-45577-00	PAF15-06080006-1	293-351
626-45577-00-01	PAF15-06080006-1	291-349
626-45577-00-03	PAF15-06080006-3	349
626-45577-00-05	PAF15-06080006-5	349
626-45577-10	PAF15-06080006-2	293
626-45577-20	PAF15-06080006-3	293
626-45577-30	PAF15-06080006-4	293
626-45577-40	PAF15-06080006-5	293
62P-14984-00	REC6P2-14984-00	72-73-86-88
62X-43880-00	PH200-T035	122
62X-43880-01	PH200-T035	122
62X-43880-09	PH200-T035	122
62Y-11325-00	CM62Y-11325-00	158
62Y-11325-00	CM62Y-11325-00A	158-197-203-205-207
62Y-11325-00	PAF25-02010005	191
62Y-11325-00	TEN01149	163
62Y-11372-01	PAF25-05010113	191
62Y-11416-00	PAF25-05010302-1	193-199
62Y-11416-10	PAF25-05010302-2	193-199
62Y-11633-00	PAF25-05020105	193-195-199-201-203-205-207-219
62Y-11650-10	PAF25-05020200	199
62Y-11654-00	PAF25-05020204	193-199
62Y-11656-00	PAF25-05020203-1	193-199
62Y-11656-00	PAF25-05020203-2	193
62Y-11656-10	PAF25-05020203-2	199
62Y-12116-00	PAF20-05030003	189
62Y-12116-00	PAF25-05050003	193-195-199-201-203-207
62Y-12121-00	PAF25-05050002	193-199-207
62Y-12158-00	PAF15-07040304	185-189-193-195-199-201-203-205-207
62Y-12159-00	PAF15-07040303	185-193-199
62Y-12216-00	PAF25-05050011	193-199-207
62Y-12231-00	PAF25-05050012	193-207
62Y-12238-00	PAF25-05050009	193-207
62Y-12279-00	PAF40-05040003	207
62Y-12414-00	PAF15-07010022	138-183-191-195-197-201
62Y-12414-00	REC6H3-12414-A1	203-205-207
62Y-12481-10	PAF25-05010113	203-205
62Y-14392-00	REC61N-14392-00	93-98
62Y-14485-00	PAF20-05040005	195
62Y-14485-00	PAF40-05070002	197-201-203-207
62Y-15312-00	REC62Y-15312-00	271
62Y-24410-04	PAF25-05130000	85
62Y-24471-00	PAF25-05130005	87
62Y-41113-00	REC62Y-41133-00	268
62Y-43880-01	PH200-T036	122
62Y-43880-02	PH200-T036	122
62Y-44151-00	PAF60-04000003	303-307-311
62Y-44555-00	REC670-44555-00-94	135
62Y-45127-00	REC62Y-45127-00	268
62Y-45571-00	PAF60-04000500	311
62Y-45631-00	PAF60-04020003	307-311
62Y-46241-00	REC62Y-46241-00	207-267
62Y-82504-10	PAF15-07010103	103
62Y-W0001-20	REC62Y-W0001-22	146
62Y-W0001-21	REC62Y-W0001-22	146

REF	R.O. / OEM	
62Y-W0001-22	**REC62Y-W0001-22**	146-306
633-11634-00	**REC663-11634-00**	233-263
633-85518-00	**REC663-85518-00**	132
634-11633-00	**PAF15-07020006**	183-219
634-11633-00	**REC634-11633-00**	227-260-262
63AH-61350-00	**PAF20-07000100W**	130
63D-11181-A2	**REC63D-11181-A1**	237-248-254
63D-11193-A0	**REC63D-11193-A0**	237-255
63D-11603-00	**REC63D-11603-00**	237-263
63D-11605-00	**REC63D-11605-00**	237-263
63D-44144-00	**PA60-04000004**	305-309-313
63D-44311-00	**REC63D-44311-01**	148-156-309-313
63D-44312-00	**REC63D-44312-00**	301-305-309-313-317-361
63D-44316-00	**REC63D-44316-00**	301-305-309-313-361
63D-44322-00	**REC63D-44322-00**	154-156-301-305-309-313-317-361
63D-44323-00	**REC63D-44323-00**	305-309-313
63D-44323-00-00	**REC63D-44323-00**	149
63D-44341-00	**REC63D-44341-00**	301-309-361
63D-45114-A0	**REC63D-45114-A0**	272
63D-45123-00	**REC63D-45123-00**	269
63D-45214-00	**PAT40-04000022**	299-303-307-311
63D-45215-00	**PAT40-04000023**	299-303-307-311
63D-45251-00	**TEN01131**	165
63D-45251-01	**CM63D-45251-01**	159-169
63D-45251-01	**TEN01131**	165
63D-45251-10	**TEN01132**	163
63D-45321-00	**PAF60-04000101**	305-309-313
63D-45344-00	**PAF60-04000008**	313
63D-45361-02-4D	**REC63D-45361-02-4D**	299-307-361
63D-45361-02-8D	**REC63D-45361-02-4D**	303-311
63D-45375-00	**PAT40-04000014**	301-305-309-313
63D-45375-00	**REC688-45375-00**	317-321-325
63D-45577-10	**PAT40-04060005-2**	299-303-307-311
63D-45577-20	**PAT40-04060005-3**	299-303-307-311
63D-45577-30	**PAT40-04060005-4**	299-303-307-311
63D-45577-40	**PAT40-04060005-5**	299-303-307-311
63D-45577-50	**PAT40-04060005-6**	299-303-307-311
63D-45577-60	**PAT40-04060005-7**	299-303-307-311
63D-45611-00	**PAF60-04020001**	303-307-311
63D-45635-00	**PAF60-04020005**	303-307-311
63D-85540-00	**REC63D-85540-04**	118
63D-85540-01	**REC63D-85540-04**	118
63D-85540-02	**REC63D-85540-04**	118
63D-85540-03	**REC63D-85540-04**	118
63D-85540-04	**REC63D-85540-04**	118
63D-W0001-00	**REC63D-W0001-00**	237-251-254
63D-W0078-01	**REC63D-W0078-01**	68-69-152-154-156-306-310
63P-11181-00	**REC63P-11181-00**	211-215-218
63P-11325-00	**CM63P-11325-01**	161
63P-11325-00	**CM63P-11325-01A**	161
63P-11325-01	**CM63P-11325-01**	161
63P-11325-01	**CM63P-11325-01A**	161-211-214
63P-11325-01-00	**TEN01167**	166-169
63P-11325-11	**CM63P-11325-11**	161-169
63P-11325-11	**CM63P-11325-11A**	71-73-161-211
63P-11325-11-00	**TEN01164**	166-169
63P-11325-21	**TEN01165**	211
63P-11325-21-00	**TEN01165**	163
63P-11351-00	**REC63P-11351-01**	211-218
63P-12414-00	**REC63P-12414-00**	71-138-211
63P-13761-00	**REC63P-13761-01**	90
63P-13761-01	**REC63P-13761-01**	90
63P-13906-00	**REC63P-13906-00**	89-90
63P-13907-00	**REC63P-13907-03**	86
63P-13907-01	**REC63P-13907-03**	86
63P-13907-02	**REC63P-13907-03**	86
63P-13907-03	**REC63P-13907-03**	86
63P-13915-00	**REC63P-13915-00**	70-71-72-73-82

REF	R.O. / OEM	
63P-14984-00	**REC63P-14984-00**	71-86-88
63P-15312-00	**REC63P-15312-00**	272
63P-41114-A1	**REC63P-41114-A3**	211
63P-4380003	**REC63P-43800-20**	124
63P-4380004	**REC63P-43800-20**	124
63P-4380006	**REC63P-43800-20**	124
63P-4380007	**REC63P-43800-20**	124
63P-438002D	**REC63P-43800-20**	124
63P-43880-03-00	**REC18-6865**	124
63P-43880-10	**REC63P-43880-22**	124
63P-43880-11	**REC63P-43880-22**	124
63P-43880-12	**REC63P-43880-22**	124
63P-43880-22	**REC63P-43880-22**	124
63P-45300-00-8D	**REC416-B20F**	278
63P-45300-02-8D	**REC416-B20F**	327
63P-45300-10-8D	**REC416-B25F**	278
63P-45300-12-8D	**REC416-B25F**	327
63P-45501-00	**REC63P-45501-00**	329-333
63P-45501-10	**REC63P-45501-10**	329-333
63P-45551-00	**REC63P-45551-00**	327
63P-45987-00	**REC6E5-45987-00**	323-327
63P-46241-00	**REC63P-46241-00**	211-267
63P-81800-00	**PH130-0073**	112
63P-81950-00	**REC63P-81950-00**	115
63P-81960-00	**REC63P-81960-02**	116
63P-81960-01	**REC63P-81960-02**	116
63P-81960-02	**REC63P-81960-02**	116
63P-82380-00	**REC63P-82380-00**	90-102
63V-11181-A1	**REC63V-11181-A1**	248
63V-11181-A2	**REC63V-11181-A1**	227
63V-11412-00	**REC63V-11412-00**	227-256
63V-11422-00	**REC63V-11422-00**	227-256
63V-11432-00	**REC63V-11432-00**	227-256
63V-11442-00	**REC63V-11442-00**	227-256
63V-11445-00	**REC63V-11445-00**	227
63V-11515-02	**REC63V-11515-02**	227
63V-14126-00	**REC63V-14126-00**	94
63V-14984-00	**REC63V-14984-00**	94
63V-14985-00	**REC63V-14985-00**	93-100
63V-15396-01-CA	**REC63V-15396-01-CA**	227
63V-15713-00	**PAF15-07130107**	112
63V-15714-00	**PAF15-07130201**	113
63V-15716-00	**PAF15-07130001**	113
63V-15741-00	**PAF15-07130202**	112
63V-15767-00	**PAF15-07130203**	112
63V-15784-00	**PAF15-07130204**	112
63V-24411-00	**REC63V-24411-00**	87
63V-41111-00-1S	**REC63V-41111-00-1S**	227
63V-41112-A0	**REC63V-41112-A0**	140-227
63V-41113-00-1S	**REC63V-41113-00-1S**	227
63V-41133-A1	**REC63V-41133-A1**	268
63V-43111-00-4D	**PAF15-01010100**	131
63V-43111-01-4D	**PAF15-01010100**	131
63V-43111-A2-4D	**PAF15-01010100**	131
63V-43112-00-4D	**PAF15-01010200**	131
63V-43112-01-4D	**PAF15-01010200**	131
63V-43131-00	**PAF15-01010001**	131
63V-43131-01	**PAF15-01010001**	131
63V-43131-10	**PAF15-01010001**	131
63V-43145-00	**PAF15-01010007**	131
63V-43311-00-4D	**PAF15-01010301S**	131
63V-43311-01-4D	**PAF15-01010301S**	131
63V-44150-00	**PAF15-06030000S**	291-351
63V-44150-10	**PAF15-06030000L**	291-351
63V-44301-00	**REC63V-44301-00**	289-291-351
63V-44301-00-00	**REC63V-44301-00**	147
63V-44322-00	**REC63V-44322-00**	154-155-289-291-293-351
63V-44323-00	**REC63V-44323-00**	291-351
63V-44323-00-00	**REC63V-44323-00**	149
63V-44328-00	**PAF15-06000014**	289-291-351
63V-44328-01	**PAF15-06000014**	293
63V-44338-00	**REC664-44338-00**	351
63V-44352-01	**REC63V-44352-01**	143-154-155-291-293-351
63V-44361-01	**REC63V-44361-01**	351

REF	R.O. / OEM	
63V-44361-11	**REC63V-44361-11**	351
63V-44365-10	**PAF15-02000006**	289-291-351
63V-44514-01-CA	**REC63V-44514-01-CA**	135
63V-45113-A1	**REC63V-45113-A1**	227-252
63V-45215-00	**PAF15-06000002**	293-350
63V-45300-00-4D	**REC63V-45300-03-8D**	279
63V-45300-03-4D	**REC63V-45300-03-8D**	279
63V-45300-03-8D	**REC63V-45300-03-8D**	279
63V-45300-10-4D	**REC63V-45300-13-8D**	279
63V-45300-13-4D	**REC63V-45300-13-8D**	279
63V-45300-13-8D	**REC63V-45300-13-8D**	279
63V-45311-01-4D	**PAF15-06000001**	351
63V-45315-A0	**REC63V-45315-A0**	291-351
63V-45331-00-5B	**REC63V-45331-00-5B**	291-351
63V-45375-00	**PAF15-06020005**	289-291-292-351
63V-45510-00	**PAF15-06040000S**	291
63V-45510-01	**REC63V-45510-01**	351-387-388
63V-45510-11	**REC63V-45501-10**	291-387-388
63V-45510-11	**REC63V-45510-11**	351-387-388
63V-45536-00	**PAF15-06000006**	291-292-351
63V-45551-00	**REC63V-45551-00**	291-351
63V-45551-00-4D	**PAF15-00000001**	132
63V-455551-00	**REC63V-45551-00**	293
63V-45943-10-00	**PAF15-06090000**	402
63V-61350-00	**PAF15-11020000W**	130
63V-85520-00	**REC63V-85520-00**	106
63V-85533-00	**REC63V-85533-00**	104
63V-85540-00	**REC63V-85540-00-01**	118-119
63V-85540-01	**REC63V-85540-00-01**	118-119
63V-85540-02	**REC63V-85540-00-01**	118
63V-85570-00	**REC63V-85570-00**	105
63V-85580-01	**REC63V-85580-01**	107
63V-W0001-00	**REC63V-W0001-00**	226
63V-W0001-01	**REC63V-W0001-00**	249
63V-W0001-21	**REC63V-W0001-21**	144
63V-W0078-00	**REC63V-W0078-01**	150
63V-W0078-01	**REC63V-W0078-01**	290-350
63V-W0093-00	**REC63V-W0093-00**	93-95-226
63V-W4311-00-4D	**PAF15-01010200**	131
63V-W4311-03-4D	**PAF15-01010200**	131
63V-WS431-B6-8D	**PAF15-01010200**	131
63W-13610-00	**REC63W-13610-00**	92-99
646-11633-00	**REC646-11633-00**	220
646-11651-02	**REC646-11651-02**	220-260
646-11681-00	**REC646-11681-00**	220-260
646-14623-A1	**REC646-14623-A1**	220-254-270
646-24251-01	**PAF4-05000300**	80
646-24251-01	**REC35-80365M**	80
646-24251-02	**PAF4-05000300**	80
646-24251-02	**REC35-80365M**	80-82-83
646-44322-00	**REC646-44322-00**	343
646-44323-00	**REC646-44322-00**	343
646-44323-00	**REC646-44323-00**	148-155
646-44352-01	**REC646-44352-01**	143-155-343
646-44365-00	**REC646-44365-00**	343
646-44366-01	**REC646-44366-01**	343
646-45534-00-03	**PAF2.6-03000017**	343
646-45551-00	**REC646-45551-00**	343-387
646-45560-00	**REC646-45560-00**	343-387
647-11610-00	**REC647-11610-00**	225-262-266
647-11610-10	**REC647-11610-10**	225
647-11610-20	**REC647-11610-20**	225
647-14323-00	**REC647-14323-00**	98
647-14323-00	**REC6G1-14985-00**	93-100
647-14385-00	**REC647-14385-00**	100
647-14386-10	**REC647-14386-10**	99
647-44366-00	**REC647-44366-00**	154-155-291-346-347-351
647-45316-09	**REC647-45316-09**	347
647-45551-00	**REC647-45551-00**	347-387
647-45560-00	**REC647-45560-00**	347-387
647-45570-01	**REC647-45570-00**	347-387
647-45943-00-EL	**SOL3011-090-07-P**	402
648-11633-00	**REC648-11633-00**	237-260-261-263-264

REF	R.O. / OEM	
648-13621-A1	REC648-13621-A0	273
648-13645-A0	REC648-13645-A0	273
648-14198-A0	REC648-14198-A0	274
648-14384-01	REC648-14384-01-00	94
648-14385-00	REC648-14385-00	100
648-24411-00	REC648-24411-00	87
648-24434-01	REC648-24434-01	88
648-24435-02	REC648-24435-02	88
648-44146-00	REC648-44146-00	134
648-45633-00	REC648-45633-00	291-295-349-351-353-355-357
648-45633-11	REC648-45633-00	293
648-45635-00	REC648-45635-00	295-353-355
64D-11603-01	REC64D-11603-01	245
64D-11603-02	REC64D-11603-01	247-265
64D-11603-04	REC64D-11604-01	265
64D-11603-05	REC64D-11605-01	265
64D-11604-01	REC64D-11604-01	245-247
64D-11604-02	REC64D-11604-01	247
64D-11605-01	REC64D-11605-01	245
64D-11605-02	REC64D-11605-01	247
64D-11631-02-90	REC64D-11631-00K	247-265-267
64D-11642-02-90	REC64D-11642-00K	247-265-267
64D-14384-01	REC64D-14384-1	94
64D-14394-00	REC64D-14394-00	99
64D-45300-01-8D	REC416-A20	280
64D-45300-02-8D	REC416-A20	379
64D-45300-21-8D	REC416-A25	280
64D-45300-22-8D	REC416-A25	379
64D-W0093-00	REC64D-W0093-00	97-247
64E-13645-A0	REC64E-13645-A0	276
64E-43820-00	REC48630-96J03	125
64E-43820-00	REC48630-96J03	125
64E-43820-08	REC48630-96J03	125
64E-43820-08	REC48630-96J03	125
64E-43820-09	REC48630-96J03	125
64E-43820-09	REC48630-96J03	125
64E-43821-00	REC48630-96J03	125
64E-43821-00	REC64E-43821-05	125
64E-43821-08	REC48630-96J03	125
64E-43821-09	REC48630-96J03	125
64E-43822-00	REC64E-43822-00	125
64E-4384J-00	REC64E-4384J-00	125
64E-43880-02-40	REC18-6865	124
64E-43880-02-40	REC63P-43800-20	124
64J-12159-00	PAF15-07040303	189
64J-24560-00	REC64J-24560-10	80
64J-24560-10	REC64J-24560-10	80
64J-W0001-20	REC64J-W0001-20	146
64J-W0001-21	REC64J-W0001-21	146-333
64K-45300-02-NA	REC416-B20	281
64P-45300-10-8D	REC418-A25	280
64P-45300-10-8D	REC418-B25F	278
64P-45300-12-8D	REC418-B25F	327
650-11370-00	REC650-11370-00	231
650-11370-01	REC650-11370-00	225-235-237-239-241-243
650-11651-00	REC650-11651-04	227-260
650-14385-00	REC6H4-14985-01	100
650-14485-03	REC650-14485-03	227
650-24351-00	REC650-24351-51	76
650-24351-01	REC650-24351-51	76
650-24351-50	REC650-24351-51	76
650-24351-51	REC650-24351-51	76
650-24378-00	PAF4-04010102	173-175-177-179-180-235-237-241
650-24431-A0	REC650-24431-A0	88
650-44147-00	REC650-44147-00	134-363-367
650-45635-00	REC650-45635-00	291-293-349-351
655-12414-A1	REC655-12414-A1	138-229
65E-85570-00	REC63V-85570-00	105
65F-42537-00	PAF15-01000001	133
65L-13645-00	REC65L-13645-00	275
65L-13646-00	REC65L-13646-00	275
65L-13761-00	REC6L5-13761-00	89-90

REF	R.O. / OEM	
65L-13907-00	REC6AW-14984-00	86
65L-24563-00	REC65L-24563-00	71-72-81-82
65N-45321-00	REC65N-45321-00	335
65N-W0078-A1	REC65N-W0078-A1	152-157
65W-08M87	PAGB/T5782-M8X35	191
65W-11111-02-94	PAF25-05050100	191
65W-11119-00	PAF25-05010106	197
65W-11168-00	PAF25-05010103	191
65W-11169-00	PAF25-05010108	191
65W-11181-30	PAF25-05040000	191-215-218
65W-11191-00-94	PAF25-05000005	191
65W-11351-00	PAF25-00000013	191
65W-11351-10	PAF25-00000013	217
65W-11356-00	PAF25-05000004	191
65W-11411-01	PAF25-05020001	193-219
65W-11476-00	PAF25-05000022	193-199
65W-11536-10	PAF25-05000021	193-199
65W-11537-01	PAF25-05050017	193
65W-11631-00-96	PAF25-05020100	193-199-219
65W-11631-00-96	PAF25-05020101	193-199
65W-11642-11	PAF25-05020301	193
65W-11665-00	PAF25-05020310	193
65W-12146-00	PAF25-05050008	193
65W-12151-00	PAF25-05050301	193-199
65W-12171-10	PAF25-05050200	193
65W-12228-00	PAGB/T5783-M6X20	191
65W-12228-00	PAGB/T5783-M6X20	191
65W-13286-00	PAF25-05010107	191
65W-13300-00	PAF25-05050400	193
65W-14457-10	PAF25-05080004	268
65W-14901-12	PAF25-05070000	91
65W-15100-00-94	PAF25-05010000	191
65W-15121-00	PAF25-05000007	191
65W-15663-00	PAGBT3452.1-97.5X1.8	191
65W-24251-00	REC40145	82
65W-24251-10	REC40145	80
65W-41113-01-94	PAF25-05010112	191
65W-41114-00	PAF25-05010111	141-191
65W-42138-00	PAF15-01030100	130
65W-43800-00-4D	PAT40-10000000	124
65W-43800-01-4D	PAT40-10000000	124
65W-43800-02-4D	PAT40-10000000	124
65W-43800-03-4D	PAT40-10000000	124
65W-43800-20-4D	PAT40-10000000	124
65W-43800-21-4D	PAT40-10000000	124
65W-43800-22-8D	PAT40-10000000	124
65W-43800-23-8D	PAT40-10000000	124
65W-43880-00	PAT40-10020500	123
65W-43880-01	PAT40-10020500	123
65W-44150-00	PAF25-04030000S	297
65W-44150-10	PAF25-04030000L	297
65W-44176-00	PAF25-04000012	297
65W-44328-00	PAF25-04000016	297
65W-44361-00	PAF25-02000004S	297
65W-44361-10	PAF25-02000004L	297
65W-45251-00	TEN01123	164
65W-45300-00-4D	PAF25-04090000S	295
65W-45300-01-4D	PAF25-04090000L	278
65W-45300-01-4D	PAF25-04090000S	278
65W-45300-10-4D	PAF25-04090000L	295
65W-45331-00-5B	PAF25-04000008	297
65W-46241-00	REC65W-46241-00	193-199-267
65W-61350-00	PAF25-07000300W	130
65W-81800-00	PH130-0029	111
65W-81800-01	PH130-0029	111
65W-81800-02	PH130-0029	111
65W-81800-03	PH130-0029	111
65W-81941-00	PH375-0034	111-114
65W-82504-00	PAF15-07010103	103
65W-82575-01	REC65W-82575-01	120
65W-85510-10	PAF25-05140000	121
65W-85550-01	PAF25-05150000	109
65W-85570-01	PAF25-05120000	104
65W-85580-00	PAF25-05110000	107
65W-85790-00	PAF25-05010201	103

REF	R.O. / OEM	
65W-W0001-00	REC65W-W0001-00	217
65W-W0001-02	REC65W-W0001-00	190
65W-W0001-20	REC65W-W0001-20	145-297
65W-W0093-02	REC8542561	95-190-197
661-41262-01	PAF15-07000016	100
661-41262-02	PAF15-07000016	100
662-44352-01	REC662-44352-01	143-347
663-11193-A0	REC663-11193-00	239-255
663-11411-01	REC663-11411-00	239-256
663-11561-00	REC663-11561-00	239
663-11633-00	REC663-11633-00	239-243-260-261-264
663-11634-00	REC663-11634-00	235-263
663-12414-A0	REC663-12414-00	138-239
663-12416-00	REC663-12416-00	235-239
663-13621-A0	REC663-13621-00	275
663-14198-A0	REC663-14198-00	275
663-14483-A0	REC663-14483-A0	275
663-14548-00	REC663-14548-00	99
663-14923-00	REC663-14923-00	99
663-24411-00	REC663-24411-00	87
663-41114-A0	REC663-41114-00	142-239
663-42138-00	REC663-42138-00	129
663-43118-01-4D	REC663-43118-01-4D	134
663-44144-01	REC663-44144-01	369-371
663-44151-00	REC663-44151-00	369-371
663-44311-02	REC663-44311-02	359-369
663-44311-02-00	REC663-44311-02	147
663-44315-A0	REC663-44315-A0	155-156- 357-359-369
663-44316-A0	REC663-44316-A0	357-359-369
663-44322-00	REC663-44322-00	154-155-156-357-359-369
663-44323-00	REC663-44323-00	149-155-156-357-359-369
663-44324-A0	REC663-44324-00	357-359-369
663-44341-00	REC663-44311-02	369
663-44366-00	REC663-44366-00	301-305-309-313-317-321-333-357-359-361-363-367-369-371-373-385
663-44367-00	PAT40-02000002	301-305-309-313-317-321-367-371
663-44551-02-8D	REC663-44551-02-8D	135
663-45123-00	REC663-45123-00	268
663-45331-00-94	REC663-45331-00-94	369-390
663-45375-00	REC663-45375-00	367
663-45376-00	REC663-45376-00	305-325-335-367
663-45376-00-94	REC663-45376-00	301-309-313-317-321-329
663-45510-01	REC663-45510-01	369-390
663-45552-00	REC663-45552-00	359-365-369
663-455576-00	REC663-45576-00	365
663-45567-01	PAT40-04000004-1	299-303-307-311
663-45567-01-10	PAT40-04000004-1	365
663-45567-01-12	PAT40-04000004-2	365
663-45567-01-15	PAT40-04000004-3	365
663-45567-01-30	PAT40-04000004-5	365
663-45567-10	PAT40-04000004-2	299-303-307-311
663-45567-20	PAT40-04000004-3	299-303-307-311
663-45567-40	PAT40-04000004-5	299-303-307-311
663-45587-01	PAT40-04000003-1	301-305-309-313
663-45587-01-10	PAT40-04000003-1	367
663-45587-01-12	PAT40-04000003-2	367
663-45587-01-15	PAT40-04000003-3	367
663-45587-01-18	PAT40-04000003-4	367
663-45587-01-30	PAT40-04000003-5	367
663-45587-01-40	PAT40-04000003-6	367
663-45587-01-50	PAT40-04000003-7	367
663-45587-10	PAT40-04000003-2	301-305-309-313
663-45587-20	PAT40-04000003-3	301-305-309-313
663-45587-30	PAT40-04000003-4	301-305-309-313
663-45587-40	PAT40-04000003-5	301-305-309-313
663-45587-50	PAT40-04000003-6	301-305-309-313

REF	R.O. / OEM	
663-45587-60	PAT40-04000003-7	301-305-309-313
663-45631-01	REC663-45631-00	359-363-365-369-389-390
663-45633-00	REC663-45633-00	359-361-363-365-369-389-390
663-45634-00	REC663-45634-00	303-307-311-359-363-365-369
663-45941-01-EL	SOL3311-110-17	402
663-45943-02-EL	SOL3311-110-15	402
663-45945-02-EL	SOL3311-111-13	402
663-45947-02-EL	SOL3311-116-11	402
663-45949-01-EL	SOL3311-110-16	402
663-45952-02-EL	SOL3311-114-12	402
663-45956-01-EL	SOL3311-121-09	402
663-45958-01-EL	SOL3311-111-14	402
663-45987-00	REC663-45987-00	365
663-45987-02	REC663-45987-00	299-303-307-311-359-361-369
663-48344-00	REC663-48344-00	127
663-85540-11	REC663-85540-15	119
663-85540-15	REC663-85540-15	119
663-W0078-00	REC663-W0078-01	368
663-W0078-01	REC663-W0078-01	152-368
663-W0078-A0	REC663-W0078-01	151
664-11325-00	TEN01166	225
664-41114-A0	REC664-41114-A0	140
664-41134-A0	REC664-41134-A0	268
664-44338-00	REC664-44338-00	289-291-293-353
664-45371-01	CM664-45371-01	357-359-361
664-45371-01	TEN01100	164-169
664-45371-01-00	CM664-45371-01	353
664-45371-01A	CM664-45371-01	160
664-45371-01A	CM664-45371-01A	66-160-169
664-45384-00	REC664-45384-00	353-357
664-4556-50	PAF15-06000010-7	349
664-45567-01	PAF15-06000010-1	293
664-45567-01-10	PAF15-06000010-1	291-351
664-45567-05	PAF15-06000010-1	349
664-45567-10	PAF15-06000010-2	293
664-45567-12	PAF15-06000010-2	349
664-45567-20	PAF15-06000010-3	293
664-45567-30	PAF15-06000010-4	293
664-45567-30	PAF15-06000010-5	349
664-45567-40	PAF15-06000010-5	293
664-45567-50	PAF15-06000010-6	293
664-45567-60	PAF15-06000010-7	293
664-45631-01	REC664-45631-01	353
664-45631-02	PAF25-04060003	295
664-45631-02	REC664-45631-00	355-388-389
664-45941-01-EL	SOL3211-099-09	402
664-45945-00-EL	SOL3211-099-10	402
664-45947-01-EL	PAF25-04080000	295
664-45947-01-EL	SOL3211-099-11	402
664-45949-02-EL	SOL3211-099-13	402
664-45954-00-EL	SOL3211-099-12	402
664-45970-00-98	SOL3231-103-12	402
664-45972-00-98	SOL3231-105-11	402
664-45987-00	REC664-45987-00	353
664-81970-60	REC6G1-81970-62	116
664-81970-61	REC6G1-81970-62	116
664-81970-62	REC6G1-81970-62	116
664-81970-63	REC6G1-81970-62	116
665L-13915-00	REC65L-13915-00	82
667-41114-A0	REC66T-41114-A0	233
667-45551-00	REC66T-45551-00	303
667-45571-00	REC66T-45571-00	303
667-45997-00	REC66T-45997-00	303-307-311
667F-44323-00	REC67F-44323-00	149
6689-W0001-C2	REC689-W0001-C2	145
66G1-81941-10	REC89-825096T01	114
66K-13907-00	REC6AW-14984-00	86
66K-13915-00	REC66K-13915-00	82
66K-14984-00	REC66K-14984-00	86-88
66K-45300-12-NA	REC421-A20	281

REF	R.O. / OEM	
66K-45501-00	REC66K-45501-00	385
66M-11111-01-1S	PAF15-07040000	185
66M-11168-001S	PAF15-07010200	183
66M-11181-10	PAF15-07000100	185-215
66M-11191-00-1S	PAF15-07050001	185
66M-11325-00	CM15008	159
66M-11325-00	CM15008A	159
66M-11325-00	PAF15-07010008	183
66M-11325-00	TEN01151	163
66M-11327-00-94	PAF15-07010011	168-183-191-197-203-205-207
66M-11328-00	PAF15-07010009	65-66-67-68-69-183-191-197-203-205-207
66M-11328-00	PAGB/T97.1-8	193
66M-11351-10	PAF15-00000014	183-217
66M-11356-00	PAF15-07050002	185
66M-11356-00	PAGB/T97.1-8	191
66M-11357-00	PAF15-07010014	183
66M-11411-00	PAF15-07030000	183-219
66M-11416-00	PAF15-07010024	183
66M-11536-10	PAF15-07030003	185
66M-11537-00-94	PAF15-07040018	185
66M-11557-00	PAF15-07030004	185
66M-11631-00-96	PAF15-07020001	183-219
66M-11650-00	PAF15-07020100	183
66M-12111-00	PAF15-07040001	185
66M-12113-00	PAF15-07040005	185
66M-12116-00	PAF15-07040004	185
66M-12121-00	PAF15-07040002	185
66M-12138-60	PAF15-10030001	185
66M-12146-00	PAF15-07040015	185-189
66M-12151-10	PAF15-07040301	185
66M-12170-00	PAF15-07040200	185
66M-12411-00	PAF15-07000031	137
66M-12411-01	PAF15-07000031	137-179-180-183
66M-12535-00	PAF15-07010012	183-191-197-203-205-207
66M-13300-10	PAF15-07040500	185
66M-13329-10	PAF15-07040016	185
66M-14301-00	PAF15-07090000	91
66M-14301-00	PAF15-07090000W	91
66M-15100-02-1S	PAF15-07010000	183
66M-24410-11	PAF15-07140000	85
66M-41113-20-1S	PAF15-07010019	183
66M-41114-01	PAF15-07010018	65-140-183
66M-41138-00	PAF15-04010004	268
66M-44361-00	PAF15-02000005S	291
66M-44361-10	PAF15-02000005L	291
66M-44514-00-4D	PAF15-02010000	135
66M-44551-00-4D	PAF15-00000001	132
66M-44557-00	PAF15-00000003	135
66M-45113-00	PAF15-00000005	271
66M-45115-00	PAF15-03000003	268
66M-45300-02-4D	PAF15-06100000S	277-291
66M-45300-11-4D	PAF15-06100000L	277-291
66M-45371-00	CM66M-45371-00	159-169-291
66M-45371-00	TEN01136	65-164-169
66M-46241-00	REC66M-46241-00	185-267
66M-46297-00	PAF15-07000024	185
66M-81800-00	PH130-0084	110
66M-81800-01	PH130-0034	111
66M-81800-01	PH130-0084	110
66M-81800-02	PH130-0034	111
66M-81800-02	PH130-0084	110
66M-85520-00	PAF15-07000300	106
66M-85533-00	PAF15-07000400	104
66M-85540-10	PAF15-07000500	118
66M-85550-00	PAF15-07070000	109
66M-85550-10	PAF15-07070100W	109
66M-85570-00	PAF15-07000600	104
66M-85570-00	REC689-81311-40	105
66M-85580-00	PAF15-07000200	107
66M-W0001-01	REC66M-W0001-01	182-216-218
66M-W0001-20	REC66M-W0001-20	144-290

REF	R.O. / OEM	
66M-W0093-01	REC66M-W0093-01	95-182
66M-W009B-15-1S	PAF15-07000000	185
66N-11603-00	REC66N-11603-00	183-219
66T-11181-A0	REC66T-11181-00	249
66T-11181-A2	REC66T-11181-00	233
66T-11193-A0	REC66T-11193-A0	233-255
66T-11412-00	REC66T-11412-00	233-256
66T-11422-00	REC66T-11422-00	233-256
66T-11432-00	REC66T-11432-00	233-256
66T-11442-00	REC66T-11442-00	233-256
66T-11603-00	REC66T-11603-00	233-263-266
66T-11604-00	REC66T-11604-00	233-263
66T-11605-00	REC66T-11605-00	233-263
66T-11631-01-93	REC66T-11631-01K	233-263-266
66T-11635-01	REC66T-11635-01K	233-263
66T-11636-01	REC66T-11636-01K	233-263
66T-11681-00	REC66T-11681-00	233-260-261
66T-14384-01	REC66T-14384-01	94
66T-14536-01	REC66T-14536-01	94
66T-14992-00	REC66T-14992-00	99
66T-15713-00	REC66T-15713-00	112
66T-26301-00	REC66T-26301-00	129
66T-41114-A0	REC66T-41114-A0	141
66T-41133-A0	REC66T-41133-A1	269
66T-44311-00	PAT40-04000201	148-301-305
66T-44323-00	REC66T-44323-00	149-154-301-361
66T-44514-00-4D	REC66T-44514-00-4D	135
66T-45113-A0	REC66T-45113-A0	253
66T-45113-A00	REC66T-45113-A0	233
66T-45114-A0	REC66T-45114-A0	271
66T-45300-00-4D	PAF40-04000000L	279
66T-45311-01-4D	PAF40-04000000L	279
66T-45321-00	PAT40-04000007	301
66T-45344-01	PAT40-04000009	301-305-309
66T-45501-01	REC66T-45501-01	361-389
66T-45501-11	REC66T-45501-10	361-389-390
66T-45551-00	REC66T-45551-00	299-361
66T-45560-01	REC66T-45560-00	299-303-361-389-390
66T-45571-00	REC66T-45571-00	299-361
66T-45611-00	REC66T-45611-00	299-361-389-390
66T-45631-00	REC66T-45631-00	299-361-389-390
66T-45635-00	REC66T-45635-00	299-361
66T-45997-00	REC66T-45997-00	299-361-365
66T-82575-01	REC66T-82575-01	120
66T-85533-00	REC66T-85533-00	104
66T-85540-01	REC66T-85540-00-01	119
66T-85570-00	REC66T-85570-00	105
66T-85580-00	REC66T-85580-00	107
66T-W0001-01	REC66T-W0001-01	233-250-254
66T-W0001-20	REC66T-W0001-20	146-361
66T-W0078-00	REC66T-W0078-00	298-361
66T-W0078-01	REC66T-W0078-00	152
66T-W0093-01	REC66T-W0093-01	93-96-233
66W-11119-00	PAF25-05010106	191
670-44514-00	REC670-44514-00	135
670-45997-02	REC670-45997-00	359-369
676-11181-A2	REC676-11181-01	249-254
676-11325-00	TEN01166	166-233-235
676-11372-00	PAF15-04000005	173-179-181-183-195-213-225-227-229-231-233
676-12414-A0	REC676-12414-A0	233
676-12414-A1	REC676-12414-A0	138
676-13646-A0	REC676-13646-A0	274
676-14186-00	REC676-14186-00	99
676-14984-00	REC676-14984-00-00	94
676-14985-01	REC676-14985-01	100
676-41112-A0	REC676-41112-A0	142
676-41133-A0	REC676-41133-A0	269
676-43160-00	REC676-43160-02	132
676-43160-01	REC676-43160-02	132
676-43160-02	REC676-43160-02	132
676-44311-00	REC676-44311-00	148-156-363-367

REF	R.O. / OEM	
676-44315-A0	**REC676-44315-00**	367
676-44315-A1	**REC676-44315-00**	363
676-44316-A1	**REC676-44316-A1**	363
676-44322-00	**REC676-44322-00**	156-367
676-44323-00	**REC676-44323-00-40**	149-156-367-363
676-44324-A0	**REC676-44324-A0**	367
676-44324-A1	**REC676-44324-A0**	363
676-44341-94	**REC676-44341-00**	363
676-44361-00	**REC676-44361-00**	367
676-44361-10	**REC676-44361-10**	367
676-44518-00	**REC676-44518-00**	135
676-45114-A1	**REC676-45114-A1**	271
676-45127-00	**REC676-45127-00**	269
676-45128-00	**REC676-45128-00**	269
676-45251-00	**TEN01127**	166-233-235
676-45314-00	**REC676-45314-00**	363
676-45361-01-94	**REC676-45361-00**	363-390
676-45501-10	**REC676-45501-10**	363-389-390
676-45533-00	**REC676-45533-00**	363
676-45587-00-70	**REC676-45587-00**	363
676-45587-00-75	**REC676-45587-00-75**	363
676-45587-00-80	**REC676-45587-00-80**	363
676-45635-00	**REC676-45635-00**	359-363-365
676-81800-10	**PH130-0007**	111
676-81970-00	**REC6G1-81970-62**	116
677-11181-A1	**REC677-11181-A0**	225-248-254
677-11412-02	**REC677-11412-02**	225-256
677-11422-02	**REC677-11422-02**	225-256
677-11432-02	**REC677-11432-02**	225-256
677-11442-02	**REC677-11442-02**	225-256
677-11631-00-97	**REC677-11631-00K**	225-262-266
677-11635-00	**REC677-11635-00K**	225-262
677-11636-00	**REC677-11636-00K**	225-262
677-13621-A1	**REC677-13621-00**	273
677-14198-A1	**REC677-14198-A1**	273
677-14227-01	**REC677-14227-00**	94
677-14343-68	**REC677-14343-68**	98
677-14384-01	**REC677-14384-01**	94
677-24434-02	**REC677-24434-02**	273
677-24435-01	**REC677-24435-01**	87
677-24471-01	**REC677-24471-01**	87
677-26301-02	**REC677-26301-02**	129
677-41112-A1	**REC677-41112-A0**	225
677-41114-A0	**REC677-41112-A0**	140
677-41114-A1	**REC677-41112-A0**	225
677-45113-A0	**REC677-45113-A0**	225-252-254
677-45251-00	**CM6E0-45251-11**	347
677-W0093-00	**REC677-W0093-00**	95-225
679-145560-00	**REC679-45560-00**	365-389
679-14923-00	**REC679-14923-00**	99
679-14966-00	**REC676-14966-00**	100
679-44150-00	**REC679-44150-00**	367
679-44150-10	**REC679-44150-10**	367
679-44152-00	**REC679-44152-00**	367
679-44316-A0	**REC679-44316-A0**	367
679-44341-00-94	**REC679-44341-00**	367
679-44514-00-94	**REC679-44514-00-94**	135
679-45251-00	**CM679-45251-00**	160
679-45251-00	**CM679-45251-00A**	160
679-45315-A1	**REC679-45315-A1**	365
679-45321-02	**REC679-45321-02**	365
679-45331-00-94	**REC679-45331-00**	365
679-45371-00	**TEN01101**	164-169-365-369
679-45501-10	**REC679-45501-10**	367-389
679-45536-00	**REC679-45536-00**	367
679-45571-00	**REC679-45571-00**	365
679-45611-01	**REC679-45611-00**	359-365-389-390
679-W0078-00	**REC679-W0078-A1**	151-156
67C-11181-01	**REC67C-11181-01**	197-215-218
67C-11351-01	**REC67C-11351-00**	197-207-218
67C-11356-00	**REC67C-11356-00**	197
67C-11537-01	**PAF40-05040006**	199
67C-11603-00	**REC67C-11603-00**	193-195-199-201-203-205-219

REF	R.O. / OEM	
67C-11650-00	**PAF25-05020200**	193
67C-12111-00	**PAF25-05050001**	193-199
67C-15312-00	**PAF25-02010007**	271
67C-15312-00	**REC67C-15312-00**	271
67C-41114-00	**REC67C-41114-00**	141
67C-41114-10	**REC67C-41114-00**	197
67C-41133-00	**REC67C-41133-00**	268
67C-43880-00	**REC67C-43880-01**	122
67C-43880-01	**REC67C-43880-01**	122
67C-45113-00	**REC67C-45113-00**	271
67C-45123-00	**REC67C-45123-00**	268
67C-45251-00	**CM67C-45251-00**	158-169-361
67C-45251-00	**CM67C-45251-00A**	66-67-69-158-299-303-307-311
67C-45251-00	**TEN01132**	163
67C-45371-00	**CM67C-45371-00**	160-169
67C-45371-00	**CM67C-45371-00A**	160-299-303-307-311
67C-45501-00	**REC67C-45501-00**	301-305-389-390
67C-45501-10	**REC67C-45501-10**	301-305-389-390
67C-45633-00	**PAT40-04050005**	307-311
67C-81800-00	**PH130-0028**	110
67C-81800-01	**PH130-0028**	110
67C-81800-02	**PH130-0028**	110
67C-W0001-00	**REC67C-W0001-01**	217
67C-W0001-01	**REC67C-W0001-01**	197-217
67C-W0001-20	**REC67C-W0001-20**	298
67D-11181-A0	**PAF4-04000014**	175-215-218
67D-11191-00	**PAF4-04000018**	175
67D-11400-00	**PAF4-04030000**	175-219
67D-11650-00	**PAF4-04020100**	175
67D-11654-00	**PAF4-04020103**	175
67D-12111-00	**PA166F-010001**	173-180
67D-12111-00	**PAF4-04080005**	175
67D-12121-00	**PA166F-010002**	173
67D-12121-00	**PAF4-04080006**	175-180
67D-12151-00	**PA166F-010009**	173-175-179
67D-12154-00	**PAF4-04000015**	175
67D-12157-00	**PA166F-010008**	173-175-179
67D-12413-00-1S	**PAF4-04070001**	175
67D-14301-03	**PAF4-04140000**	91
67D-24410-03	**PAF4-04090000**	85
67D-24610-00	**PAF4-04120100**	75
67D-24610-02	**PAF4-04120100**	75
67D-24610-03	**PAF4-04120100**	75
67D-24610-04	**PAF4-04120100**	75
67D-44366-00	**PAF4-03000021**	285-287
67D-45113-A0	**PAF4-00000006**	175-217-218
67D-45560-00	**PAF4-03010000**	285-287-387
67D-45570-00	**PAF4-03040000**	285-287-387
67D-45631-01	**PAF4-03030002**	285-287
67D-45635-00	**PAF4-03000008**	285-287
67D-85640-00	**PAF4-04000038**	106
67D-W0093-00	**REC67D-W0093-00**	95-177
67F-11181-02	**REC67F-11181-03**	209
67F-11181-03	**REC67F-11181-03**	215
67F-11325-00	**CM67F-11325-00**	159
67F-11325-00	**TEN01146**	163
67F-11325-01	**CM67F-11325-01**	161
67F-11325-01	**CM67F-11325-01A**	161-211-213
67F-11325-01	**TEN01146-1**	163
67F-11328-00	**REC67F-11328-00**	209-211-214
67F-12411-00	**REC67F-12411-01**	137
67F-12411-01	**REC67F-12411-01**	137-209-211-213
67F-14371-01	**REC67F-14371-01**	101
67F-24251-02	**REC40165**	80-81-82
67F-41134-A0	**REC67F-41134-A0**	269
67F-41138-00	**REC67F-41138-00**	269
67F-43880-00	**PH200-T044**	123
67F-44311-00	**REC67F-44311-01**	321
67F-44311-01-00	**REC67F-44311-01**	148-154-155
67F-44322-00	**REC67F-44322-00**	321-154-155
67F-44323-00	**REC67F-44323-00**	321-154-155
67F-44352-00	**REC67F-44352-00**	143-321-154-155

REF	R.O. / OEM	
67F-45113-00	**REC67F-45113-00**	272
67F-45123-00	**REC67F-45123-00**	269
67F-45127-00	**REC67F-45127-00**	269
67F-45331-00-94	**REC67F-45331-00-CA**	319
67F-45371-00	**CM67F-45371-00**	161
67F-45371-00	**CM67F-45371-00A**	68-69 -161-315-319
67F-45371-00	**TEN01140**	165
67F-45371-00	**TEN01141**	165-169
67F-45501-10	**REC67F-45501-10**	321-391
67F-45560-00	**REC67F-45560-00**	319-390-391
67F-45576-00	**REC67F-45576-00**	315-319
67F-45611-01	**REC67F-45611-01**	315-319-391
67F-45997-00	**REC67F-45997-00**	315-319-371-405
67F-46241-00	**REC67F-46241-00**	209-267
67F-81800-01	**PH130-0055**	112
67F-81800-02	**PH130-0055**	112
67F-81800-03	**PH130-0055**	112
67F-81800-04	**PH130-0055**	112
67F-81960-00	**REC67F-81960-12**	116
67F-85570-00	**REC67F-85570-00**	105
67F-W0001-00	**REC67F-W0001-00**	217
67F-W0001-01	**REC67F-W0001-00**	209
67F-W0001-20	**REC67F-W0001-20**	145-318
67F-W0078-00	**REC67F-W0078-00**	69-70-152-154-155-318
67F-W0093-00	**REC67F-W0093-00**	97-209
67F11416-00	**REC67F-11416-00**	209
67F11416-10	**REC67F-11416-10**	209
67F11416-20	**REC67F-11416-20**	209
67H-13907-00	**REC67H-13907-00**	86
67H-13907-00	**REC6AW-14984-00**	86
67H-43880-00	**PH200-T057**	123
67H-8592A-01	**REC67H-8592A-01**	103
680-WE090-11-15	**PAF4-04000000**	175
682-11325-00	**TEN01162**	166-227
682-11351-A0	**REC682-11351-A0**	252
682-11610-00	**REC682-11610-01**	262
682-11610-01	**REC682-11610-01**	227
682-11610-11	**REC682-11610-11**	227-262
682-11610-21	**REC682-11610-21**	227-262
682-11681-00	**REC682-11681-00**	227-260
682-12413-00-1S	**REC682-12413-00-1S**	139-227
682-12413-00-9M	**REC682-12413-00-1S**	139
682-12414-A1	**REC682-12414-A1**	138-139-227
682-13621-A0	**REC682-13621-00**	273
682-41112-A1	**REC682-41112-00**	140
682-41114-A1	**REC682-41114-00**	140
682-41133-A0	**REC682-41133-A0**	268
682-41237-50	**REC682-41237-50**	132
682-42137-00	**REC682-41237-00**	132
682-44147-00	**REC682-44147-00**	349-357
682-44176-00	**REC682-44176-00**	349
682-44312-00	**REC682-44312-00**	349
682-44315-00	**REC682-44315-00**	154-155-156-349
682-44322-00	**REC682-44322-00**	154-155-156-349
682-44323-00	**REC682-44323-40**	154-155-156-349
682-44328-00	**REC682-44328-00**	349
682-44352-00	**REC682-44352-01**	349
682-44352-03	**REC682-44352-01**	143
682-44361-01	**REC682-44361-01**	349
682-44361-10	**REC682-44361-10**	349
682-44365-00	**REC682-44365-00**	154-155-156-349
682-44514-01-94	**REC682-44514-01-94**	135
682-44555-30	**PAF15-00000002**	135
682-45113-02	**REC682-45113-A0**	254-271
682-45251-00	**TEN01128**	166
682-45376-01	**REC682-45376-01**	349
682-45631-00	**REC682-45631-00**	291-293-349-351-387-388
682-81800-10	**PH130-0061**	110
682-81800-11	**PH130-0061**	110
682-81800-12	**PH130-0061**	110
682-82556-00	**PAF4-01090401**	120
682-W0078-A1	**REC682-W0078-A1**	150-154-155-156-348

REF	R.O. / OEM	
683-44361-01	**REC683-44362-01**	349
683-44365-01	**REC683-44365-01**	349
683-44373-00	**REC683-44373-00**	349
683-45315-00	**REC683-45315-A0**	349
683-45361-00-EJ	**REC683-45361-01-4D**	349
683-45361-02-4D	**REC683-45361-01-4D**	291-351
683-45361-02-8D	**REC683-45361-01-4D**	293
683-45611-00	**REC683-45611-00**	291-293-349-351-387-388
683-45941-00-00	**SOL3111-093-12**	402
683-45942-00-EL	**SOL3111-093-10**	402
683-45943-00-EL	**SOL3111-093-11**	402
683-45945-00-EL	**SOL3111-093-09**	402
683-45947-00-EL	**SOL3111-093-08**	402
683-W0001-21	**REC683-W0001-21**	348
683-W0001-C1	**REC683-W0001-21**	144
688-11111-02-1S	**REC688-11111-02-1S**	243
688-11181-A1	**REC688-11181-A1**	243
688-11181-A2	**REC688-11181-A1**	249
688-11193-A1	**REC688-11193-A1**	243-255
688-11325-00	**CM85007**	160
688-11325-00	**CM85007A**	160
688-11325-00	**TEN01147**	163-237-243
688-11370-01	**REC688-11370-00**	237-241-243
688-11411-01	**REC688-11411-00**	243-256
688-11603-A0	**REC688-11603-A0**	239-243-264-266
688-11605-A0	**REC688-11605-A0**	239-243-264
688-11610-02	**REC688-11610-02**	264-266
688-11631-02-95	**REC688-11631-02K**	264-266
688-11631-03-94	**REC688-11631-03K**	239-243-264
688-11631-81-96	**REC688-11631-81K**	264-266
688-11634-00	**REC688-11634-00**	229-239-243-263-264
688-11634-10	**REC688-11634-00**	241
688-11635-03	**REC688-11635-03K**	239-264
688-11635-03	**REC688-11636-03K**	264
688-11636-03	**REC688-11636-03K**	239
688-11650-03	**REC688-11650-03**	239-243-264
688-12411-10	**REC6E5-12411-30**	243
688-12413-00-1S	**REC688-12413-00-1S**	139-243
688-12414-A1	**REC688-12414-A1**	138-139-243-245-247
688-12416-00	**REC688-12416-00**	139-243
688-13610-00	**REC688-13610-00**	99
688-13621-A1	**REC688-13621-A1**	274
688-14198-A2	**REC688-14198-A1**	274
688-14416-01	**REC688-14416-01**	274
688-14483-A0	**REC688-14483-A0**	274
688-14548-00	**REC688-14548-00**	99
688-14947-00	**REC688-14947-00**	98
688-24378-00	**PAF15-05000011**	183-191-195-197-207
688-41112-A0	**REC688-41112-A0**	142-243
688-41114-A0	**REC688-41114-A0**	142-243
688-41134-A0	**REC688-41134-00**	269
688-41211-00	**REC688-41211-01**	132
688-41211-01	**REC688-41211-01**	132
688-41217-00	**REC688-41217-00**	101
688-43160-01	**REC688-43160-01**	132
688-43880-11	**PH200-T037**	123
688-44120-11	**REC688-44120-12**	134
688-44120-12	**REC688-44120-12**	134
688-44120-22	**REC688-44120-22**	134
688-44311-01	**REC688-44311-01**	148-371
688-44311-01-00	**REC688-44311-01**	373
688-44315-A0	**REC688-44315-00**	321-371
688-44315-A0-00	**REC688-44315-00**	373
688-44316-00	**REC688-44316-00**	321
688-44316-A0	**REC688-44316-00**	371
688-44316-A0-00	**REC688-44316-00**	373
688-44322-00	**REC688-44322-00**	371
688-44322-00-00	**REC688-44322-00**	373
688-44323-00-00	**REC688-44323-00**	149
688-44323-00-00	**REC688-44323-00**	373
688-44323-40	**REC688-44323-00**	371
688-44324-A0	**REC688-44324-00**	321-371
688-44324-A0-00	**REC688-44324-00**	373

REF	R.O. / OEM	
688-44341-01-94	**REC688-44341-01**	371
688-44341-01-94	**REC688-44341-01**	373
688-44352-03	**REC688-44352-03**	143-156-371
688-44352-03-00	**REC688-44352-03**	373
688-44361-10	**REC688-44361-10**	371
688-44514-00	**REC688-44514-00**	135
688-44555-00	**REC688-44555-00**	135
688-45113-A0	**REC688-45113-A0**	243-253-254
688-45114-A1	**REC688-45114-A1**	272
688-45123-00	**REC688-45123-00**	269
688-45214-02	**REC688-45214-02**	323-365
688-45215-02	**REC688-45215-02**	323-365
688-45251-01	**CM688-45251-01**	158-169
688-45251-01	**CM688-45251-01A**	67-68-69-158-169
688-45251-01	**TEN01110**	163-169
688-45331-00-94	**REC688-45331-00-94**	371
688-45331-00-94	**REC688-45331-00-94**	373
688-45341-00	**REC688-45341-00**	295-359-375
688-45341-00-00	**REC688-45341-00**	373
688-45341-10	**REC688-45341-00**	299-303-307-311-315-319-323-327-331-335-337-341-355-361-363-369-370-379
688-45371-02	**CM688-45371-02**	371
688-45371-02	**TEN01104**	164-169
688-45371-02-00	**CM688-45371-02**	373
688-45375-00	**REC688-45375-00**	329-371
688-45383-02	**REC688-45383-01**	315-319-323-371-375
688-45383-02-00	**REC688-45383-01**	373
688-45384-00	**REC688-45384-00**	371-375
688-45384-00-00	**REC688-45384-00**	373
688-45384-02	**REC688-45384-00**	315-319-323
688-45501-11	**REC688-45501-11**	371-390-391
688-45536-01	**REC688-45536-01**	317-321
688-45551-01	**REC688-45551-00**	371-390-391
688-45551-01-00	**REC688-45551-00**	373
688-45560-00	**REC688-45560-00**	371
688-45560-00-00	**REC688-45560-00**	373
688-45567-01	**PAT85-040000004-B**	315-319
688-45571-01	**REC688-45570-00**	371
688-45587-01	**PAT85-040000003-B**	317-321
688-45611-00	**REC688-45611-00**	371-390-391
688-45631-01	**REC688-45631-00**	371-390-391
688-45633-00	**REC688-45633-00**	315-319-371
688-45633-00-00	**REC688-45633-00**	373
688-45634-00	**REC688-45634-00**	371
688-45635-00	**REC688-45635-00**	369-371
688-45930-02-98	**SOL3431-133-17**	402
688-45970-03-98	**SOL3431-130-19**	402
688-45972-02-98	**SOL3431-130-21**	402
688-45978-60-98	**SOL3431-135-15**	402
688-45987-01	**REC688-45987-00**	315-319-371-405
688-45987-01-00	**REC688-45987-00**	373
688-45997-00	**REC688-45997-00**	383
688-45997-01	**REC688-45997-00**	323-327-331-335-337-375-379-405
688-45997-01-00	**REC688-45997-00**	373
688-81800-10	**PH130-0058**	111
688-81800-11	**PH130-0058**	111
688-81800-12	**PH130-0058**	111
688-81950-10	**REC688-81950-10**	111-114
688-82560-10	**REC688-82560-10**	103
688-82575-01	**REC688-82575-01**	120
688-82586-21	**PAF15-13000100W**	128
688-8258A-10	**REC688-8258A**	128
688-8258A-20	**PAT85-08010100**	128
688-8258A-30	**REC688-8258A-30**	128
688-85510-00	**REC688-85510-01**	121
688-85510-01	**REC688-85510-01**	121
688-85510-10	**REC688-85510-10**	121
688-85510-11	**REC688-85510-10**	121
688-85540-00	**REC688-85540-00**	117
688-85540-16	**REC688-85540-16**	120
688-W0001-02	**REC688-W0001-A0**	243

REF	R.O. / OEM	
688-W0001-20	**REC688-W0001-20**	146
688-W0001-20-00	**REC688-W0001-22**	373
688-W0001-22	**REC688-W0001-22**	146-370
688-W0001-A0	**REC688-W0001-A0**	251
689-11181-A2	**REC689-11181-00**	248-254
689-11325-00	**CM3082523**	158
689-11325-00	**CM689-11325-00A**	158
689-11325-00	**TEN01121**	167-229
689-11610-01	**REC689-11610-00**	263-266
689-11631-00-95	**REC689-11631-00K**	263-266
689-11633-00	**REC689-11633-00**	229-260-263
689-11651-00	**REC689-11651-00**	229-260-261
689-11681-01	**REC689-11681-00**	229-260-261
689-15396-01-5B	**REC689-15396-01-CA**	229
689-15755-00	**REC689-15755-00**	134
689-41112-A0	**REC689-41112-A0**	141
689-41114-A0	**REC689-41114-A0**	141
689-44311-03	**REC689-44311-00**	147-155-353
689-44315-A0	**REC689-44315-A0**	353
689-44316-A0	**REC689-44316-A0**	353
689-44323-03	**REC689-44323-00**	155-353
689-44324-A0	**REC689-44324-A0**	155-353
689-44352-02	**REC689-44352-02**	143-155-353
689-44366-00	**REC689-44366-00**	155-353-355
689-45113-A1	**REC61T-45113-A0**	229
689-45501-10	**REC689-45501-10**	353-388-389
689-45551-00	**REC689-45551-00**	353-388-389
689-45560-00	**REC689-45560-00**	353-388-389
689-45570-00	**REC689-45571-00-00**	353-388-389
689-45611-00	**REC689-45611-00**	353-388-389
689-45997-00	**REC689-45997-00**	295-353-355-357-405
689-81800-10	**PH130-0049**	110
689-81800-11	**PH130-0049**	110
689-81800-12	**PH130-0049**	110
689-81800-13	**PH130-0049**	110
689-85540-20	**REC689-85540-21**	119
689-85540-21	**REC689-85540-21**	119
689-W0001-20	**REC689-W0001-20**	145
689-W0001-21	**REC689-W0001-21**	145-353
689-W0078-04	**REC689-W0078-04**	151-155
689-W0078-A6	**REC689-W0078-A6**	151-155-353
689-W0093-02	**REC689-W0093-02**	95
689-W4432-02	**REC689-W4432-01**	155-156-353
68D-11351-A0	**PAF4-04000002**	177-270
68D-24610-10	**PAF4-04120100**	75
68D-65300-03-4D	**PAF4-0310000S**	277
68D-65300-11-4D	**PAF4-0310000L**	277
68D-E1111-10-1S	**PAF4-04080101**	175
68D-E1168-00	**PAF4-04000010**	177
68D-E1169-A0	**PAF4-04000009**	177
68D-E1193-A0	**PAF4-04000017**	175
68D-E1311-02-15	**PAF4-04010100**	177
68D-E1325-00	**PAF4-04070003**	64-65-66-67-68-69-70-71-173-175-179
68D-E1603-00	**REC68D-E1603-00**	175-219
68D-E1631-00-96	**PAF4-04020001**	175
68D-E1631-00-96	**PAF4-04020200**	175-219
68D-E1633-00	**PAF4-04020005**	175-219
68D-E2113-00	**PAF4-04080008**	173-175
68D-E2155-00	**PAF4-04080009**	175
68D-E2170-00	**PAF4-04040000**	175
68D-E2413-00-1S	**PAF4-04070000**	179
68D-E2413-001S	**PAF4-04070100**	175
68D-E2414-A0	**PAF4-04000011**	64-138-173-175-179
68D-E3102-00	**PAF4-04050100**	177
68D-E5111-00-1S	**PAF4-04050200**	177
68D-E5346-00	**PAF4-04010003**	177
68D-E5362-00	**PAF4-04000007**	177
68D-E5362-00	**PAF4-04000010**	179
68D-E5362-00	**PAGB/T5783-M5X12**	183
68D-E5396-00-5B	**PAF4-04060001**	177-179
68D-G2177-10	**PAF4-01090300**	133
68D-G4150-00	**PAF4-03020000S**	285
68D-G4150-10	**PAF4-03020000L**	285

REF	R.O. / OEM	
68D-G4311-01	PAF4-03000019	147-285
68D-G4315-A0	PAF4-03000018	285
68D-G4328-00	PAF4-03000020	285-287
68D-G4360-00	PAF4-02040001S	285
68D-G4360-10	PAF4-02040001	285
68D-G4365-00	PAF4-02040002	283-285
68D-G5251-00	CM6L5-45251-02A	287
68D-G5251-00	PAF4-03000022	64-283-285
68D-G5300-00-4D	PAF4-0310000S	285
68D-G5300-10-4D	PAF4-0310000L	285
68D-G5300-11-4D	PAF4-03000001	285
68D-G5315-A0	PAF4-03000011	285-287
68D-G5321-00	PAF4-03000012	285-287
68D-G5361-00-4D	PAF4-03050001	285-287
68D-G5511-00	PAF4-03000004S	287
68D-G5511-10	PAF4-03000004L	287
68D-G5978-00	PAF4-03000025	283
68D-G5987-00	PAF4-03000025	285-287
68F-11181-00	REC68F-11181-00	249-254
68F-11193-02	REC68F-11193-02	255
68F-11381-00	REC68F-11381-00	276
68F-13440-00	REC68F-13440-00	83
68F-13907-01	REC68F-13907-01	86
68F-13915-00	REC68F-13915-00	82
68F-24563-00	REC68F-24563-00	81
68F-24563-10	REC68F-24563-10	81
68F-41114-00	REC68F-41114-00	142
68F-45113-01	REC68F-45113-01	253-254
68F-81800-00	PH130-0056	111
68F-81800-01	PH130-0056	111
68F-81800-03	PH130-0056	111
68F-83688-00	REC68F-83688-00	90-102
68F-83688-10	REC68F-83688-10	90-102
68F-8592A-00	REC68F-8592A-00	103
68F-W0001-01	REC68F-W0001-01	252-254
68N-81940-00	PH375-0042	115
68T-11325-00	CM68T-11325-00	161
68T-11325-00	CM68T-11325-00A	71-72-73-161-211
68T-11325-00	TEN01163	166
68T-12116-00	PAF4-04080007	175-179-180
68T-13475-00	REC68T-13475-00	271
68T-24251-00	REC68T-24251-00	80-82
68T-24251-01	REC68T-24251-00	80
68T-24410-00	REC68T-24410-00-00	85
68T-24410-01	REC68T-24410-00-00	85
68T-44323-00	REC68T-44323-00	149-154-289-293
68T-44352-00	REC68T-44352-00	143-154-289
68T-44366-00	REC68T-44366-00	154-289
68T-45251-00	CM68T-45251-00	158-169
68T-45251-00	CM68T-45251-00A	64-65-158-169-289
68T-45251-00	TEN01142	163-169
68T-46241-00	REC68T-46241-00	267
68T-85540-00	REC68T-85540-00	118
68T-W0001-20	REC68T-W0001-20	144-289
68T-W0078-00	REC68T-W0078-00	150-289
68T-W0078-01	REC68T-W0078-00	150
68V-11325-01	CM68V-11325-01	158
68V-11325-01	CM68V-11325-01A	158
68V-11325-01	TEN01156-1	167
68V-11325-02	CM68V-11325-01A	209
68V-11325-02	TEN01156	72-167
68V-11351-00	REC68V-11351-00	209-218
68V-12111-00	REC68V-12111-00	209
68V-13761-00	REC68V-8A360-00	89
68V-13907-00	REC68V-13907-00	86
68V-13907-01	REC68V-13907-00	86
68V-13907-02	REC68V-13907-00	86
68V-13907-03	REC68V-13907-00	86
68V-13907-04	REC68V-13907-00	86
68V-13915-00	REC68V-13915-00	72-82
68V-14984-00	REC68V-14984-00	72-86-88
68V-15312-00	REC68V-15312-00	272
68V-24410-00	REC68V-24410-00	85

REF	R.O. / OEM	
68V-24563-00	REC68V-24563-00	68-80-81-82
68V-43880-03-40	REC18-6865	124
68V-43880-03-40	REC63P-43800-20	124
68V-45501-10	REC68V-45501-10	325
68V-81800-00	PH130-0057	111
68V-81800-01	PH130-0057	111
68V-81800-02	PH130-0057	111
68V-8194A-00	PH375-0042	115
68V-81950-00	REC68V-81950-00	115
68V-81960-00	REC881346T	117
68V-82380-00	REC68V-82380-00	90-102
68V-85885-00	REC68V-85885-00	90-102
68V-8A360-00	REC68V-8A360-00	89
68V-W0001-20	REC68V-W0001-20	147-322
68V-W0078-00	REC68V-W0078-00	70-71-152-155-322
68W-43880-03	PH200-T057	123
692-14590-00	REC692-14590-01	98
692-14590-01	REC692-14590-01	98
692-14923-00	REC692-14923-00	98
692-24410-00	REC692-24410-00	85
692-24411-00	REC692-24411-00	87
692-26301-00	REC692-26301-03	129
692-26301-01	REC692-26301-03	129
692-26301-02	REC692-26301-03	129
692-26301-03	REC692-26301-03	129
692-41256-00	REC692-41256-00	101
692-44120-21	REC692-44120-22	134
692-44120-22	REC692-44120-22	134
692-45300-12-4D	REC692-45300-16-8D	280
692-45300-13-4D	REC692-45300-16-8D	280
692-45300-14-4D	REC692-45300-16-8D	280-370
692-W0078-00	REC692-W0078-02	152
692-W0078-00-00	REC692-W0078-02	373
692-W0078-01	REC692-W0078-02	152
692-W0078-01-00	REC692-W0078-02	373
692-W0078-02	REC692-W0078-02	152-370
695-11181-A1	REC695-11181-00	248-254
695-85540-11	REC695-85540-11	119
695-85540-12	REC695-85540-11	119
695-W0001-01	REC695-W0001-A2	250-254
696-14590-01	REC696-14590-01	98
696-45113-00	REC696-45113-00	239
696-45113-A0	REC696-45113-00	253
696-85540-10	REC696-85540-12	119
696-85540-11	REC696-85540-12	119
696-85540-12	REC696-85540-12	119
696-W0093-00	REC696-W0093-00	239
696-W0093-01	REC84419M	96
696-W0093-02	REC696-W0093-00	96
696-W0093-02	REC84419M	96
697-11181-A2	REC697-11181-A1	239-249-254
697-44352-00	REC6H3-44352-00	369
697-45114-A0	REC697-45114-00	254-271
697-45384-00	REC697-45384-00	359-365-369
697-45551-00	REC697-45551-00	369-390
697-45560-00	REC697-45560-00	369-390
697-45571-00	REC697-45570-00	369
697-45611-00	REC697-45611-00	369-388-390
697-81800-10	PH130-0007	111
697-81800-11	PH130-0007	111
697-81800-12	PH130-0007	111
697-85570-00	REC697-85570-00	105
697-85570-11	REC697-85570-10	105
697-W0001-02	REC697-W0001-02	239
697-W0001-A0	REC697-W0001-02	251
698-W0001-21	REC698-W0001-21	145-368
69D-W0001-20	REC69D-W0001-20	146
69G-45315-A0	PAF20-04000001	292
69G-45331-01-CA	PAF20-04010001	292
69G-W0001-20	REC69G-W0001-20	144-289
69G-W0078-00	REC69G-W0078-01	150
69G-W0078-01	REC69G-W0078-01	150
69J-11181-03	REC69J-11181-03	216-218
69J-11182-03	REC69J-11182-03	216-218

REF	R.O. / OEM	
69J-11351-11	REC69J-11351-11	213-218
69J-12111-00	REC69J-12111-00	211
69J-12119-00	REC69J-12119-00	211
69J-13440-00	REC35-822626Q15	83
69J-13440-01	REC35-822626Q15	83-211-213
69J-13440-03	REC35-822626Q15	83
69J-13645-A1	REC69J-13645-00	273
69J-13761-00	REC69J-13761-00	90
69J-13906-00	REC69J-13906-00	89-90
69J-13907-00	REC69J-13907-03	86
69J-13907-01	REC69J-13907-03	86
69J-13907-02	REC69J-13907-03	86
69J-13907-03	REC69J-13907-03	86
69J-13907-04	REC69J-13907-03	86
69J-15451-00	REC69J-15451-00	213
69J-15451-A1	REC69J-15451-00	273
69J-24410-00	REC69J-24410-02	86
69J-24410-01	REC69J-24410-02	86
69J-24410-02	REC69J-24410-02	86
69J-24501-10	REC69J-24501-10	71-72-81
69J-24502-00	REC69J-24502-00	81
69J-41134-A0	REC69J-41134-A0	270
69J-41135-A0	REC69J-41135-A0	270
69J-41138-00	REC69J-41138-00	270
69J-43880-00	PH200-T069	123
69J-43880-01	PH200-T069	123
69J-45123-00	REC69J-45123-00	270
69J-45300-21-8D	REC421-B25F	279
69J-45300-22-8D	REC421-B25F	331
69J-45361-00-8D	REC69J-45361-00-8D	331-383
69J-45375-00	REC69J-45375-00	331-383
69J-45611-00	REC69J-45611-00	331-337-392
69J-45631-00	REC69J-45631-00	331-337-392
69J-46241-00	REC69J-46241-00	267
69J-81800-00	PH130-0074	112
69J-81800-01	PH130-0074	112
69J-81960-10	REC69J-81960-13	116
69J-81960-11	REC69J-81960-13	116
69J-81960-12	REC69J-81960-13	116
69J-81960-13	REC69J-81960-13	116
69J-85885-00	REC69J-85885-00	90-102
69J-W0001-20	REC69J-W0001-20-00	147-333
69K-45300-21-8D	REC428-B25F	279
69K-45300-34-8D	REC428-B30F	279
69K-45611-00	REC69K-45611-00	331-337
69L-11181-00	REC61A-11181-A0	249-254
69L-45371-00	CM69L-45371-00	160-169
69L-45371-00	CM69L-45371-00A	160-169
69L-45371-00	TEN01145	168-169
69L-81800-00	PH130-0059	110
69M-11181-00	PAF2.6-04000001	173-215-218
69M-11193-A0	PAF2.6-04000005	173
69M-11351-A0	PAF2.6-04000004	171-270
69M-11400-00	PAF2.6-04030000	173-219
69M-11650-00	PAF2.6-04020100	173
69M-12154-00	PAF2.6-04000002	173
69M-12170-01	PAF2.6-04000100	173
69M-12411-00	REC6AH-12411-00	136
69M-12411-01	REC6AH-12411-00	136-173-175
69M-14301-21	PAF2.6-04000200	91
69M-15361-00	PAF2.6-04010102	171
69M-24575-00	PAF2.6-00000004	76
69M-44361-00	PAF2.6-02000003S	283
69M-44361-10	PAF2.6-02000003L	283
69M-45113-A0	PAF2.6-00000003	173-217-218
69M-65300-01-4D	PAF2.6-03020000S	277
69M-65300-11-4D	PAF2.6-03020000L	277
69M-85640-00	PAF2.6-04000600	106
69M-E1111-00-1S	PAF2.6-04040100	173
69M-E1191-00-1S	PAF2.6-04000006	173
69M-E1311-00-1	PAF2.6-04010100	171
69M-E1603-01	REC69M-E1603-01	173-219
69M-E1631-01-96	PAF2.6-04020001	173-219
69M-E1633-00	PAF2.6-04020005	173-219

REF	R.O. / OEM	
69M-E2155-00	PAF2.6-04040001	173
69M-E2413-00-1S	PAF2.6-04000501	173
69M-E3102-00	PAF2.6-04050100	171
69M-E5111-00-1S	PAF2.6-04050001	171
69M-E5363-00	PAF15-07050004	171-180
69M-E5396-00	PAF2.6-04060001	171
69M-E5396-00-5B	PAF2.6-04060000	171
69M-G2743-00	PAF2.6-04000008	171
69M-G4311-00	PAF2.6-03000014	147-154-283
69M-G4323-00	PAF2.6-03000010	148-154-283
69M-G4328-00	PAF2.6-03000016	283
69M-G5300-00-4D	PAF2.6-03020000S	283
69M-G5300-01-4D	PAF2.6-03020000L	283
69M-G5311-00-4D	PAF2.6-03000001	283
69M-G5315-A0	PAF2.6-03000007	283
69M-G5321-00-94	PAF2.6-03000008	283
69M-G5361-00-4D	PAF2.6-03000301	283
69M-G5511-00	PAF2.6-03000011S	283
69M-G5511-10	PAF2.6-03000011L	283
69M-G5635-00	PAF2.6-03000020	283
69M-WE0090-01-1S	POWERHEAD2.6	173
69P-11412-00	REC6G0-11412-00	229-256
69P-11422-00	REC6G0-11422-00	229-256
69P-11432-00	REC6G0-11432-00	229-256
69P-11442-00	REC6G0-11442-00	229-256
69P-85541-09	REC69P-85541-09	106
69W-43880-00	PH200-T036	122
69W-43880-01	PH200-T036	122
69W-45300-00-4D	PAF60-04000000	278
69W-45300-00-8D	PAF60-04000000	278
69W-45300-01-8D	PAF60-04000000	278
69W-45300-04-8D	PAF60-04000000	311
69W-45301-00-8D	PAF60-04000001	311
69W-45501-00	PAF60-04010000	313
69W-45551-00	PAF60-04000002	311
69W-45560-00	PAF60-04000600	311
69W-45941-00-EL	PAT40-04070000	402
69W-81800-00	PH130-0059	110
69W-82575-00	REC69W-82575-00	120
6A0-14325-00	REC6A0-14325-00	99
6A0-24410-00	REC692-24410-00	85
6A0-24410-00	REC6A0-24410-04	85
6A0-24410-01	REC6A0-24410-04	85
6A0-24410-02	REC6A0-24410-04	85
6A0-24410-03	REC692-24410-00	85
6A0-24410-03	REC6A0-24410-04	85
6A0-24410-04	REC692-24410-00	85
6A0-24410-04	REC6A0-24410-04	85
6A0-24410-05	REC692-24410-00	85
6A0-82550-01	REC6A0-82550-01	120
6A0-W0001-21	REC6A0-W0001-21	146
6A1-14613-00	REC6A1-14613-A0	270
6A1-14613-01	REC6A1-14613-A0	270
6A1-14613-A0	REC6A1-14613-A0	220-270
6A1-44325-00P	REC6A1-44325-00	343
6A1-44361-00	REC6A1-44361-00	343
6A1-85540-00	REC6A1-85540-01	118
6A1-85540-01	REC6A1-85540-01	118
6A1-85570-00	REC6A1-85570-00	105
6A1-W0001-22	REC6A1-W0001-22	144
6A1-W0001-23	REC6A1-W0001-23	144-343
6A1-W0078-01	REC6A1-W0078-01	150-155-343
6A1-W0093-01	REC6A1-W0093-01	93-95
6AE-43880-00	PH200-T057	123
6AE-43880-01	PH200-T057	123
6AE-43880-03	PH200-T057	123
6AE-43880-04	PH200-T057	123
6AG-11181-00	REC6AG-11181-00	215
6AG-11181-10	REC6AG-11181-00	187
6AH-11111-10-1S	PAF20-05030100	187
6AH-11168-00	PAF20-05040003	187
6AH-11169-00	PAF20-05040004	187
6AH-11191-001S	PAF20-05040000	187
6AH-11351-10	REC6AH-11351-00	187-218
6AH-11356-00	PAF20-05040002	187

REF	R.O. / OEM	
6AH-11372-00	PAF20-05040005	187
6AH-11411-00	PAF20-05020004	189-219
6AH-11416-00	PAF20-05010003	189
6AH-11536-00	PAF20-05000027	189
6AH-11537-00	PAF20-05030012	189
6AH-11557-00	PAF20-05000028	189
6AH-11603-00	PAF20-05020100	189-219
6AH-11631-00	PAF20-05020001	189-219
6AH-11650-10	PAF20-05020200	189
6AH-11654-00	PAF25-05020204	189
6AH-12111-00	PAF20-05030001	189
6AH-12121-10	PAF20-05030002	189
6AH-12151-00	PAF20-05030301	189
6AH-12170-00	PAF20-05030200	189
6AH-12279-00	PAF20-05030008	189
6AH-12411-00	REC6AH-12411-00	136-187
6AH-12413-00-1S	PAF20-05000700	187
6AH-12414-00	PAF20-05000702	65-138-187
6AH-12481-00	PAF20-05000016	187
6AH-13300-00	PAF20-05030400	189
6AH-13329-00	REC6AH-13329-00	271
6AH-13329-10	PAF20-05030010	189
6AH-15100-00	PAF20-05010000	187
6AH-15312-00	REC6AH-15312-00	271
6AH-24410-00	PAF20-05050000	85
6AH-41113-01-1S	PAF20-05000600	187
6AH-41114-00	PAF20-05000602	187
6AH-44150-00	PAF20-04020000S	292
6AH-44150-10	PAF20-04020000L	292
6AH-44311-00	PAF20-04040001	147-293
6AH-44361-01	PAF20-02000101S	293
6AH-44361-11	PAF20-02000101L	293
6AH-44365-00	PAF20-02000007	293
6AH-44368-00	PAF20-02000005	293
6AH-45251-00	TEN01154AL	65-165-293
6AH-45300-00-4D	PAF20-04000000S	277
6AH-45300-00-8D	PAF20-04000000S	277-292
6AH-45300-10-4D	PAF20-04000000L	277
6AH-45300-10-8D	PAF20-04000000L	277-292
6AH-45510-00	PAF20-04030000S	293
6AH-45510-10	PAF20-04030000L	293
6AH-46241-00	PAF20-05000003	189-267
6AH-81800-00	PAF20-05000900W	111
6AH-81800-01	PAF20-05000900W	111
6AH-81960-00	PAT85-05030300	116
6AH-82560-00	PAT40-05000100	103
6AH-85510-00	PAF20-05000200	121
6AH-85540-00	PAF20-05000300	118
6AH-85550-00	PAF20-05000500	109
6AH-85550-10	PAF20-05000500W	109
6AH-85580-00	PAF20-05000100	107
6AH-W0078-00	REC6AH-W0078-00	150-153-292
6AH-W0078-01	REC6AH-W0078-00	150-292
6AH-W009B-02-1S	PAF20-05000000	189
6AQ-1132N-00	TEN01171	73-167-169
6AU-12121-00	PAF6-04050002	179
6AV-45251-00	TEN01138	164
6AW-11181-00	REC6AW-11181-00	214-216-218
6AW-11182-00	REC6AW-11182-00	214-216-218
6AW-11325-00	TEN01170	214
6AW-1132L-00	TEN01173	73-167-169
6AW-1132M-00	TEN01176	167-169
6AW-1132P-00	TEN01177	73-168-169-214
6AW-1132R-00	TEN01172	73-167-169-214
6AW-1132S-00	TEN01170	167
6AW-1132T-00	TEN01175	73-167-169
6AW-1132U-00	TEN01174	73-167
6AW-11351-00	REC6AW-11351-00	214-218
6AW-12411-00	REC6AW-12411-00	73-137-214
6AW-13907-00	REC6AW-13907-00	86
6AW-14613-00	REC6AW-14613-00	272
6AW-14623-00	REC6AW-14623-00	272
6AW-14984-00	REC6AW-14984-00	88
6AW-15312-00	REC6AW-15312-00	272

REF	R.O. / OEM	
6AW-15451-00	REC6AW-15451-00	214-272
6AW-41134-00	REC6AW-41134-01	270
6AW-43880-00	REC6AW-43880-02	123
6AW-43880-01	REC6AW-43880-02	123
6AW-43880-02	REC6AW-43880-02	123
6AW-44311-00	REC6AW-44311-01	148-341
6AW-44311-01	REC6AW-44311-01	148
6AW-44312-00	REC6AW-44312-00	335-341
6AW-44315-00	REC6AW-44315-00	341
6AW-44322-00	REC6AW-44322-00	335-341
6AW-44323-00	REC6AW-44323-00	341
6AW-44336-00	REC6AW-44336-00	341
6AW-44352-00	REC6AW-44352-00	143-341
6AW-44365-00	REC6AW-44365-00	335-341
6AW-45113-00	REC6AW-45113-00	272
6AW-45251	TEN01112-1	166-169
6AW-45251-00	CM6AW-45251-00	161-169
6AW-45251-00	CM6AW-45251-00A	72-161-169
6AW-45373-00	CM6AW-45373-00A	161-169 -341
6AW-45373-00	TEN01155AL	166
6AW-45619-00	CM6AW-45619-00A	161-341
6AW-45619-00	TEN01169	165
6AW-8194A-00	REC6AW-8194A-00	115
6AW-81950-00	REC6AW-81950-00	115
6AW-W0078-00	REC6AW-W0078-00	73-153-155-341
6B4-11193-A0	REC6B4-11193-A0	140
6B4-11351-A1	REC6B4-11351-A1	252
6B4-14301-00	REC6B4-14301-00	91-93
6B4-26301-00	REC6B4-26301-00	129
6B4-45251-00	TEN01116	348
6B4-85520-00	REC6B4-85520-00	107
6B4-85540-01	REC6B4-85540-01	120
6B4-85570-00	REC6B4-85570-01	104
6B4-85570-01	REC6B4-85570-01	104
6B4-85580-00	REC6B4-85580-00	107
6BG-11181-00	REC6BG-11181-00	201-215-218
6BG-13761-00	REC6BG-13761-00	89-90
6BG-13915-00	REC6BG-13915-00	67-80
6BG-44341-00	PAT40-04040001	313
6BG-W0078-00	REC6BG-W0078-00	67-151-153-154-302
6BL-11181-00	REC6BL-11181-00	195-215-218
6BL-11325-00	CM6BL-11325-00	161
6BL-11325-00	CM6BL-11325-00A	161-195
6BL-11325-00	TEN01161	166
6BL-44391-00	PAF15-05000009	139
6BR-81800-00	PH130-0073	112
6BR-81800-01	PH130-0073	112
6BX-11181-00	PAF6-04000002	179-215
6BX-11351-00	PAF6-04000001	179
6BX-11356-00	PAF6-04000005	179
6BX-12111-00	PAF6-04050001	179
6BX-12154-00	PAF6-04000003	179
6BX-44322-00	PAF6-03000002	154-287
6BX-45113-00	PAF6-00000001	151-179-217
6BX-E1111-00-1S	PAF6-04050100	179
6BX-E1168-00	PAF6-04010004	179
6BX-E1191-00-5B	PAF6-04000004	179
6BX-E2155-00	PAF6-04050004	179
6BX-E2170-00	PAF6-04030000	179
6BX-F4323-00	PAF6-04000020	179
6BX-G4150-00	PAF4-03020000S	287
6BX-G4150-10	PAF4-03020000L	287
6BX-G4315-01	PAF4-03000018	287
6BX-WG0078-00	REC6EE-W0078-01	150
6C5-11650-00	PAF25-05020200	195-203-207
6C5-11650-10	PAF25-05020200	201-205
6C5-11654-00	PAF25-05020204	195-201-203-205-207
6C5-12858-00	PAF15-07010003	187
6C5-13761-00	REC6C5-13761-00	89-90
6C5-13907-00	REC866169T01	86
6C5-13915-00	REC6C5-13915-00	68-69-70-81
6C5-14984-00	REC6C5-14984-00	68-69-86-88
6C5-24251-00	REC6C5-24251-00	67-68-69-70-80

REF	R.O. / OEM	
6C5-24410-00	**REC6C5-24410-00**	85
6C5-43800-11	**PAF60-06000000**	124
6C5-43800-12	**PAF60-06000000**	124
6C5-43880-00	**PH200-T045**	123
6C5-43880-01	**PH200-T045**	123
6C5-44361-00	**PAF60-02000007**	313
6C5-46241-00	**REC6C5-46241-00**	195-201-203-205-267
6C5-81800-00	**PH130-0056**	111
6C5-82105-01	**PAT85-05000023**	112
6C5-85885-00	**REC6C5-85885-00**	90-102
6C9-81800-00	**PH130-0076**	112
6CB-11181-00	**REC6CB-11181-00**	216-218
6CB-13016-00	**REC6CB-13016-00**	70-71-72-73-88
6CB-14984-00	**REC6CB-14984-00**	70-71-72-73-88
6CB-45611-00	**REC6CB-45611-00**	335
6CE-12411-00	**REC6CE-12411-00**	73-137
6CE-44311-00	**REC6CE-44311-01**	148
6CE-44311-01	**REC6CE-44311-01**	148-335
6CE-44315-00	**REC6CE-44315-00**	335
6CE-44323-01	**REC6CE-44323-01**	335
6CE-44352-00	**REC6CE-44352-00**	143
6CE-44352-01	**REC6CE-44352-00**	335
6CE-W0078-00	**REC6CE-W0078-01**	153
6CE-W0078-01	**REC6CE-W0078-01**	153-334
6CJ-11181-00	**REC6CJ-11181-00**	205-215-218
6CJ-44323-00	**REC6CJ-44323-00**	317
6CJ-44324-00	**REC6CJ-44324-00**	317
6CJ-81800-00	**PH130-0056**	111
6CJ-W0078-00	**REC6CJ-W0078-00**	69-151-153-154-314
6D0-11181-00	**REC6D0-11181-00**	249-254
6D0-41134-00	**REC61A-41134-A0**	272
6D0-44362-01	**REC6D0-44362-01**	335-339
6D0-44367-00	**REC6D0-44367-00**	335-339
6D0-45332-00-CA	**REC6D0-45332-00-CA**	337
6D0-45361-00-8D	**REC6D0-45361-00-8D**	337
6D0-81800-00	**PH130-0076**	112
6D0-W0001-00	**REC6D0-W0001-00**	252-254
6D3-81960-00	**REC881346T**	117
6D8-11603-01	**REC6D8-11603-10**	209
6D8-11604-01	**REC6D8-11604-10**	209
6D8-12111-00	**REC6D8-12111-00**	209
6D8-12121-10	**REC6D8-12121-10**	209
6D8-13761-00	**REC6D8-13761-00**	89-90
6D8-24563-00	**REC6D8-WS24A-00**	80
6D8-41114-A0	**REC67F-41114-A2**	209
6D8-43880-00	**PH200-T068**	123
6D8-43880-00	**REC6D8-43880-09**	123
6D8-43880-01	**PH200-T068**	123
6D8-43880-09	**PH200-T068**	123
6D8-43880-09	**REC6D8-43880-09**	123
6D8-44341-01	**REC688-44341-01**	321
6D8-WS24A-00	**REC6D8-WS24A-00**	80
6D9-12411-00	**REC6D9-12411-00**	70-137
6D9-45551-00	**REC6D9-45551-00**	319
6DA-11181-00	**REC6DA-11181-00**	216-218
6DA-12411-01	**REC6DA-12411-01**	72-136-137
6E0-11193-A1	**REC6E0-11193-A1**	221
6E0-11631-00-98	**REC6E0-11631-00-98K**	221-262-266
6E0-11651-01	**REC6E0-11651-01**	221-225-260
6E0-24411-00	**REC6E0-24411-00**	87
6E0-24435-00	**REC6E0-24435-00**	87
6E0-24471-00	**REC6E0-24471-00**	87
6E0-26301-01	**REC6E0-26301-01**	129
6E0-41112-A1	**REC6E0-41112-A1**	140-21
6E0-41114-A1	**REC6E0-41114-A1**	140-221
6E0-43118-00	**REC6E0-43118-01**	134
6E0-43118-01	**REC6E0-43118-01**	134
6E0-44311-00	**PAF4-03000019**	345
6E0-44315-A0	**PAF4-03000018**	345
6E0-44322-02	**PAF4-03000017**	285
6E0-44322-02	**REC6E0-44322-02**	154-155-345
6E0-44323-00	**PAF4-03000015**	154-155-285-345
6E0-44328-00	**PAF4-03000020**	345

REF	R.O. / OEM	
6E0-44352-00	**PAF4-03060000**	64-285
6E0-44352-00	**REC6E0-44352-00**	143-154-155-287-345
6E0-44366-00	**PAF4-03000021**	345
6E0-45113-A1	**REC6E0-45113-A1**	221-252
6E0-45251-11-00	**TEN01123**	164
6E0-45315-A0	**PAF4-03000011**	345
6E0-45316-09	**PAF4-03000003**	285-287
6E0-45316-09	**REC6E0-45316-00**	345
6E0-45316-09	**REC90340-08002**	346
6E0-45317-09	**PAF4-03000002**	285-287
6E0-45317-09	**REC6E0-45317-00**	345
6E0-45321-01-5B	**PAF4-03000012**	345
6E0-45361-01-4D	**PAF4-03050001**	345-387
6E0-45511-01	**PAF4-03000004S**	285
6E0-45511-01	**REC6E0-45511-01**	345-387
6E0-45511-11	**PAF4-03000004L**	285
6E0-45511-11	**REC6E0-45511-11**	345-387
6E0-45551-00	**PAF4-03000007**	285
6E0-45551-00	**REC6E0-45551-00**	345-387
6E0-45560-00	**REC6E0-45560-00**	345-387
6E0-45570-00	**REC6E0-45570-00**	345-387
6E0-45611-01	**REC6E0-45611-01**	345
6E0-45631-00	**REC6E0-45631-00**	345-387
6E0-45943-01	**PAF4-03070000**	287
6E0-45943-01-EL	**PAF4-03070000**	285-402
6E0-45943-01-EL	**SOL3011-075-07S**	402
6E0-45949-00	**PAF2.6-03010000**	287
6E0-85540-70	**REC6E0-85540-71**	119
6E0-85540-71	**REC6E0-85540-71**	119
6E0-85570-00	**REC6E0-85570-00**	104
6E0-W0001-C1	**REC6E0-W0001-C1**	144-285-345
6E0-W0078-00	**PAGB/T820-M5X30**	345
6E0-W0078-00	**REC6E0-W0078-A2**	150-153
6E0-W0078-01	**PAGB/T820-M5X30**	345
6E0-W0078-01	**REC6E0-W0078-A2**	150-153
6E0-W0078-02	**PAGB/T820-M5X30**	345
6E0-W0078-02	**REC6E0-W0078-A2**	150-153
6E0-W0078-A2	**REC6E0-W0078-A2**	150-153-155-285-345
6E5-11181-A2	**REC6E5-11181-A0**	245-249-254
6E5-11193-A0	**REC6E5-11193-A0**	245-255
6E5-11325-00	**CM15026**	158-169
6E5-11325-00	**CM15026A**	158-187-209-213
6E5-11325-00	**PAF15-07010026**	183
6E5-11325-00	**TEN01152**	163-169-245-247
6E5-11381-A1	**REC6E5-11381-A1**	275
6E5-11381-A2	**REC6E5-11381-A1**	245-247
6E5-11447-00	**REC6E5-11447-00**	245-247
6E5-11610-02	**REC6E5-11610-02**	265-266-267
6E5-11633-01	**REC6E5-11633-00**	261-265
6E5-11634-00	**REC6E5-11634-00**	265
6E5-12411-00	**REC6E5-12411-02**	136
6E5-12411-01	**REC6E5-12411-02**	136-221-223-229-231-233
6E5-12411-02	**REC6E5-12411-02**	136
6E5-12411-10	**REC6E5-12411-30**	137
6E5-12411-20	**REC6E5-12411-30**	137
6E5-12411-30	**REC6E5-12411-30**	137-227-237-245-247
6E5-13411-00	**REC6E5-13411-00**	83
6E5-13621-A1	**REC6E5-13621-A1**	275
6E5-13645-A1	**REC6E5-13645-A1-00**	275
6E5-14198-A2	**REC6E5-14198-A2**	275
6E5-14323-03	**REC6E5-14323-03**	99
6E5-14328-01	**REC6E5-14328-01**	99
6E5-14385-02	**REC6E5-14385-02**	93-100
6E5-14386-01	**REC6E5-14386-01**	99
6E5-14386-02	**REC6E5-14386-02**	99
6E5-14416-A1	**REC6E5-14416-A1**	275
6E5-14483-A1	**REC6E5-14483-A1**	275
6E5-14546-00	**REC6E5-14546-00**	93-98
6E5-24305-05-00	**GS31076**	76
6E5-24305-06	**GS31076**	76
6E5-24305-06-00	**GS31076**	76
6E5-24351-00	**REC6E5-24351-51**	76
6E5-24351-51	**REC6E5-24351-51**	76

REF	R.O. / OEM	
6E5-24377-00	**PAF15-07010006**	181-183
6E5-24410-01-00	**REC6E5-24410-03**	85
6E5-24411-00-00	**REC6E5-24411-00**	87
6E5-24434-02	**REC6E5-24434-02**	88
6E5-24435-00	**REC6E5-24435-00**	88
6E5-24471-00	**REC6E5-24471-00**	87
6E5-41112-A1	**REC6E5-41112-A1**	142-245
6E5-41134-A0	**REC6E5-41134-A0**	269-270
6E5-43880-00	**PH200-T037**	123
6E5-43880-01	**PH200-T037**	123
6E5-43880-02	**PH200-T037**	123
6E5-44150-01	**REC6E5-44150-02**	377
6E5-44311-00	**REC61A-44311-00**	148
6E5-44311-00	**REC6E5-44311-00**	155-156-157-381
6E5-44312-00	**REC6E5-44312-00**	325-329-333-339-385-386
6E5-44315-A0	**REC6E5-44315-A0**	156-157-325-329-333-377-381-385
6E5-44322-00	**REC6E5-44322-00**	156-157-381
6E5-44323-00	**REC6E5-44323-00-40**	149-155-156-157-377
6E5-44352-01	**REC6E5-44352-01**	143-155-156-157-325-329-333-339-377-381-385-386
6E5-44365-00	**REC6E5-44365-00**	155-157-325-329-333-339-377-381-385-386
6E5-44366-00	**REC6E5-44366-00**	155-156-157-325-333-339-377-381
6E5-45113-A0	**REC6E5-45113-A2**	253-254
6E5-45114-A0	**REC6E5-45114-00**	272
6E5-45251-00	**TEN01105**	164-169
6E5-45251-00	**TEN01129**	165
6E5-45300-16-8D	**REC405-A20**	375
6E5-45300-17-8D	**REC405-A20**	280
6E5-45300-26-8D	**REC405-A25**	375
6E5-45300-27-8D	**REC405-A25**	280
6E5-45321-00	**REC6E5-45321-00**	325-329-377-381
6E5-45331-00-94	**REC6E5-45331-00-94**	377-381
6E5-45331-00-9S	**REC6E5-45331-00-94**	325-329
6E5-45332-00-94	**REC6E5-45332-00-94**	375
6E5-45332-00-CA	**REC6E5-45332-00-94**	323
6E5-45344-00	**REC6E5-45344-00**	325-329-333-339-377-381-385
6E5-45371-00	**CM6E5-45371-01A**	323
6E5-45371-00	**TEN01153**	164
6E5-45371-01	**CM6E5-45371-01A**	161-379
6E5-45371-01	**REC6E5-45371-01**	161-169-375
6E5-45371-10	**CM6E5-45371-10**	160
6E5-45371-10	**TEN01153**	370-375
6E5-45501-01	**REC6E5-45501-01**	377-391
6E5-45536-00	**REC6E5-45536-00**	325-377
6E5-45536-01	**REC6E5-45536-00**	329
6E5-45551-02	**REC6E5-45551-00**	375-391
6E5-45560-01	**REC6E5-45560-00**	375-391
6E5-45567-01	**REC6E5-45567-01**	323
6E5-45567-01-60	**REC6E5-45567-01**	375
6E5-45571-01	**REC6E5-45570-00**	375-391
6E5-45576-00	**REC6E5-45576-00**	323-375
6E5-45587-01	**REC6E5-45587-01**	325-329-377
6E5-45611-00	**REC6E5-45611-00**	323
6E5-45611-01	**REC6E5-45611-00**	375
6E5-45631-01	**REC6E5-45631-00**	375-391-392
6E5-45633-01	**REC6E5-45633-01**	323-327-335-375-379-391-392
6E5-45634-01	**REC6E5-45634-01**	323-327-375
6E5-45634-02	**REC6E5-45634-01**	327
6E5-45641-02	**REC6E5-45641-03**	375
6E5-45641-03	**REC6E5-45641-03**	327-379
6E5-45941-00-EL	**SOL3411-130-19**	402
6E5-45941-00-EL	**SOL3413-125-19**	402
6E5-45943-00-EL	**SOL3411-130-21**	402
6E5-45943-00-EL	**SOL3413-125-21**	402
6E5-45945-00-EL	**SOL3411-133-17**	402
6E5-45945-00-EL	**SOL3413-128-17**	402
6E5-45947-00-EL	**SOL3411-135-15**	402

REF	R.O. / OEM	
6E5-45947-00-EL	SOL3413-130-15	402
6E5-45949-00-EL	SOL3411-138-13	402
6E5-45949-00-EL	SOL3413-133-13	402
6E5-45954-00-EL	SOL3411-140-11	402
6E5-45978-01	REC6E5-45987-00	379
6E5-45987-01	REC6E5-45987-00	375
6E5-61301-00	GS41084	130
6E5-61301-01	GS41084	130
6E5-81800-10	PH130-0005	110
6E5-81800-11	PH130-0005	110
6E5-81800-12	PH130-0005	110
6E5-81900-01	REC6E5-81900-01	84
6E5-81941-11	REC61A-81941-00	114
6E5-81950-01	PH375-0047	110-115
6E5-81950-01	REC89-825096T01	114
6E5-8195A-01	PH375-0048	115
6E5-8195C-01	PH375-0048	115
6E5-82570-05	REC704-82570-12	127
6E5-85510-10	REC6E5-85510-11	121
6E5-85510-11	REC6E5-85510-11	121
6E5-85540-10	REC6E5-85540-12	119
6E5-85540-11	REC6E5-85540-12	119
6E5-85540-12	REC6E5-85540-12	119
6E5-85570-10	REC6E5-85570-11	105
6E5-85570-11	REC6E5-85570-11	105
6E5-W0001-21	REC6E5-W0001-F1	147
6E5-W0001-A2	REC6E5-W0001-A2	251
6E5-W0001-F1	REC6E5-W0001-F1	147-374-378
6E5-W0078-02	REC6N6-W0078-02	374
6E5-W0093-06	REC6E5-W0093-06	97-245
6E5-W0093-07	REC6E5-W0093-07	97
6E5-W0093-08	REC6E5-W0093-08	97
6E7-11111-01-1S	REC6E7-11111-01-1S	227
6E7-11181-A2	REC6E7-11181-00	248-254
6E7-11631-00	REC6E7-11631-00K	262
6E7-11631-00-97	REC6E7-11631-00K	227
6E7-11635-00	REC6E7-11635-00K	227-262
6E7-11636-00	REC6E7-11636-00K	227-262
6E7-14227-00	REC6E7-14227-00	94
6E7-14385-00	REC6E7-14385-00	93-100
6E7-44366-00	REC6E7-44366-00	349
6E7-45331-00-9M	REC6E7-45331-00-CA	349
6E7-45501-00	REC6E7-45501-00	349
6E7-45501-10	REC6E7-45501-11	349-387-388
6E7-45536-00	REC6E7-45536-00	349
6E7-45551-00	REC6E7-45551-00	348-387-388
6E7-45560-00	REC6E7-45560-01	349
6E7-45560-01	REC6E7-45560-01	291-293-351
6E7-45570-00	REC6E7-45570-00	293
6E7-45571-00	REC6E7-45570-00	291-349-351
6E7-45587-01-30	PAF15-06000009	348
6E7-45987-00	REC6E7-45987-00	291-349
6E7-45987-01	PAF15-06000015	351
6E7-45987-01	REC6E7-45987-00	293-351
6E7-85570-19-00	REC6E7-85570-19	106
6E7-W0001-00	REC6E7-W0001-A1	249
6E7-W0001-A1	REC6E7-W0001-A1	249
6E7-W0093-04	REC6E7-W0093-01	95
6E8-14390-12	REC6E8-14390-12	98
6E8-45251-00	CM6E8-45251-00	159
6E8-45251-00	TEN01106	164
6E8-45251-02	CM6E8-45251-01	159
6E8-45251-02	TEN01116	164
6E8-45587-10	PAF15-06000008	293
6E8-45587-10-13	PAF15-06000008	291-351
6E8-45587-30	PAF15-06000009	293
6E9-11193-A0	REC6E9-11193-A0	255
6E9-12413-00-1S	REC6E9-12413-00-1S	139-235
6E9-12414-A1	REC6E9-12414-A1	138-139-235
6E9-14198-A0	REC6E9-14198-A0	275
6E9-24378-00	PAF4-04010102	187
6E9-41114-A0	REC6E9-41114-A0	142
6E9-81970-70	REC6G1-81970-62	116
6E9-82575-00	REC6E9-82575-02	120
6E9-W0093-02	REC6E9-W0093-02	96

REF	R.O. / OEM	
6E9-W0093-03	REC6E9-W0093-03	96
6EE-F4251-00	REC68T-24251-00	80
6EE-G2177-00	PAF4-01090300	133
6EE-W0078-00	REC6EE-W0078-01	150
6EE-W0078-01	REC6EE-W0078-01	150
6EG-G2138-00	PAF4-01090100	130
6EK-44323-00	REC68V-44323-00	149-155-269-325
6EO-45251-11-00	CM6E0-45251-11	158
6EO-45251-11-00	CM6E0-45251-11A	158
6F3-W0001-21	REC6E5-W0001-F1	147
6F3-W0001-A4	REC6F3-W0001-04-00	251
6F5-11181-A1	REC6F5-11181-A2	235
6F5-11181-A2	REC6F5-11181-A2	248
6F5-11193-A0	REC6G5-11193-A0	247
6F5-11515-00	REC6F5-11515-00	233-235
6F5-11610-00	REC6F5-11610-00	263
6F5-11610-10	REC6F5-11610-10	263
6F5-11610-20	REC6F5-11610-20	263
6F5-11633-00	REC6F5-11633-00	233-235-260-261-263
6F5-11650-11	REC6R5-11650-10	247
6F5-11651-00	REC6F5-11651-00	233-235-260-261
6F5-11681-00	REC6F5-11681-00	235-261
6F5-12411-00	REC6F5-12411-03	137
6F5-12411-01	REC6F5-12411-03	137
6F5-12411-02	REC6F5-12411-03	137-235-239
6F5-12411-03	REC6F5-12411-03	137
6F5-13621-A1	REC6F5-13621-A1	275
6F5-13645-A1	REC6F5-13645-A0	274
6F5-13646-A1	REC6F5-13646-A2	274
6F5-14198-A1	REC6F5-14198-A1	275
6F5-14323-01	REC6F5-14323-00	98
6F5-14384-00	REC6F5-14384-00	94
6F5-14390-21	REC6F5-14390-21	98
6F5-14398-00	REC6F5-14398-00	94
6f5-14483-00	REC6F5-14483-00	94
6F5-15396-01-5B	REC6F5-15396-01-5B	235
6F5-15713-00	REC66T-15713-00	112
6F5-15713-01	REC66T-15713-00	112
6F5-24563-00	REC6F5-24563-00	80-81-82
6F5-26311-00	REC6F5-26311-00	129
6F5-41111-01-1S	REC6F5-41111-01-1S	235
6F5-41112-A0	REC6F5-41112-A0	141-235
6F5-41113-01-1S	REC6F5-41113-A0-1S	235
6F5-41114-A0	REC6F5-41114-A0	142-235
6F5-44352-00	REC6F5-44352-00	143-363
6F5-44352-002	REC6F5-44352-00	367
6F5-45113-A0	REC6F5-45113-A0	235-253-254
6F5-45312-01-4D	REC6F5-45312-00-4D	363
6F5-45551-00	REC6F5-45551-00	363-389-390
6F5-45560-00	REC6F5-45560-00	363-389-390
6F5-45570-00	REC6F5-45570-00	363-389-390
6F5-81800-10	PH130-0062	110
6F5-81800-11	PH130-0062	110
6F5-85540-22	REC6F5-85540-22	119
6F5-W0001-C0	REC6F5-W0001-C0	146-363
6F5-W0078-00	REC6F5-W0078-A0	151
6F5-W0078-A0	REC6F5-W0078-A0	363
6F6-11111-00-1S	REC6F6-11111-00-1S	235
6F6-11191-00-1S	REC6F6-11191-00-1S	235
6F6-11193-A1	REC6F6-11193-A1	235-255
6F6-11400-01	REC6F6-11400-02	235
6F6-11610-00	REC6F5-11610-00	235
6F6-11610-010	REC6F5-11610-10	235
6F6-11610-20	REC6F5-11610-20	235
6F6-11631-00-95	REC6F6-11631-00K	235-263
6F6-11635-00	REC6F6-11635-00K	235-263
6F6-11636-00	REC6F6-11636-00K	235-263
6F6-13610-00	REC6F6-13610-00	99
6F6-14301-06	REC6F6-14301-06	91
6F6-14341-00	REC6F6-14341-00	98
6F6-14385-00	REC6F6-14385-00	100
6F6-45611-00	REC6F6-45611-00	363-389-390
6F6-85530-01	REC6F6-85530-01	106
6F6-85540-01	REC6F6-85540-01	118

REF	R.O. / OEM	
6F6-W0001-02	REC6F6-W0001-02	234
6F6-W0093-00	REC6F6-W0093-00	96-234
6F8-11181-A1	REC6F8-11181-A0	220-248-254
6FM-12411-00	REC6FM-12411-00	66-136-137
6FP-12411-00	REC6FP-12411-00	70-137
6G0-82519-00	PAF6-04000009	179
6G0-85540-11	REC6G0-85540-11	119
6G1-11193-A1	REC6G1-11193-A1	140-223
6G1-11610-00	REC6G1-11610-00	221-262
6G1-11633-00	REC6G1-11633-00	221-225-260-262
6G1-11681-00	REC6G1-11681-00	221-223-225-260
6G1-13621-A1	REC6G1-13621-A1	273
6G1-13645-A1	REC6G1-13645-A1	273
6G1-14198-A1	REC6G1-14198-A1	273
6G1-14546-01	REC6G1-14546-00	93-98
6G1-15755-00	PAF4-04130100	113
6G1-15779-00	PAF4-04130100	113
6G1-24304-02	REC6G1-24304-02	77
6G1-24305-00	GS31075	76
6G1-24305-01	GS31075	76
6G1-24305-02	GS31075	76
6G1-24305-02-00	GS31075	76
6G1-24305-03	GS31075	76
6G1-24305-03-00	GS31075	76
6G1-24305-04	GS31075	76
6G1-24305-04-00	GS31075	76
6G1-24305-05	GS31075	76
6G1-24305-05-00	GS31075	76
6G1-24305-0500	GS31075	76
6G1-24306-55	PAF15-09000000	74
6G1-24411-00	REC6G1-24411-00	87
6G1-24431-01	REC6E0-24434-00	87
6G1-24431-01	REC6G1-24431-01	87
6G1-24471-00	REC6G1-24471-00	87
6G1-41112-A1	REC6G1-41112-A1	140-223
6G1-41114-A0	REC6G1-41114-A0	140-223
6G1-41133-A0	REC6G1-41133-A0	268
6G1-42138-00	PAF4-01090100	130
6G1-42138-01	PAF4-01090100	130
6G1-44315-A0	REC6G1-44315-A0	155-346
6G1-44322-00	REC6G1-44322-00	155-346
6G1-44323-00	REC6G1-44323-00	155-346
6G1-44328-00	REC6G1-44328-00	346
6G1-44352-00	REC6G1-44352-00	143-155-346
6G1-45113-A1	REC6G1-45113-A1	223-252
6G1-45214-00	PAF15-06000003	289-293-350
6G1-45215-00	PAF15-06000002	289
6G1-45251-02	CM6G1-45251-02	159-169
6G1-45251-02	TEN01108	165-169
6G1-45251-03	CM6G1-45251-03	159
6G1-45251-03	TEN01118	164
6G1-45315-A0	REC6G1-45315-A0	346
6G1-45316-09	REC6G1-45316-09	289
6G1-45317-09	REC6G1-45317-09	289
6G1-45362-09	REC6G1-45362-09	289
6G1-45611-01	REC6G1-45611-01	346-387
6G1-45631-00	REC6G1-45631-00	346-387
6G1-45941-00-EL	SOL3011-085-09	402
6G1-45943-00-EL	SOL3011-085-08	402
6G1-45947-00-EL	SOL3011-085-07	402
6G1-81940-00	REC89-825096T01	114
6G1-81941-10	PAF15-05170300W	111-114
6G1-81970-00	REC6G1-81970-62	116
6G1-81970-60	REC6G1-81970-62	116
6G1-81970-61	REC6G1-81970-62	116
6G1-81970-62	REC6G1-81970-62	116
6G1-81970-A0	REC6G1-81970-62	116
6G1-W0001-C0	REC6G1-W0001-C1	144
6G1-W0078-00	REC6G1-W0078-A1	150
6G1-W0078-01	REC6G1-W0078-A1	150
6G1-W0078-A1	REC6G1-W0078-A1	150-346
6G1-W0093-00	REC6G1-W0093-00	93-95-223
6G5-11181-A3	REC6G5-11181-A2	247-249-254
6G5-11193-A1	REC6G5-11193-A0	255

REF	R.O. / OEM	
6G5-11382-A1	**REC6G5-11382-A1**	142-245-247
6G5-11411-02	**REC6G5-11411-02**	247-256
6G5-11631-00-93	**REC6G5-11631-00K**	265-266-267
6G5-11642-00-93	**REC6G5-11642-00K**	265-266-267
6G5-12416-00	**REC60H-12416-00**	209-211
6G5-13645-A2	**REC6G5-13645-A1**	276
6G5-14416-A1	**REC6G5-14416-A1**	275
6G5-14483-A1	**REC6G5-14483-01**	276
6G5-41112-A1	**REC6G5-41112-A1**	142-247
6G5-41114-A0	**REC6G5-41114-A0**	142-247
6G5-41134-A1	**REC6G5-41134-A1**	270
6G5-41217-01	**REC6G5-41217-00**	101
6G5-43864-00	**REC6G5-43864-00**	125
6G5-43880-00	**PH200-T030**	123
6G5-43880-01	**PH200-T030**	123
6G5-43880-02	**PH200-T030**	123
6G5-44150-02	**REC6G5-44150-02**	381
6G5-44323-00	**REC6G5-44323-00**	329-333-381-385
6G5-44323-01	**REC6G5-44323-00**	149
6G5-45113-A1	**REC6G5-45113-A1**	245-247
6G5-45113-A2	**REC6G5-45113-A1**	253
6G5-45114-A1	**REC6G5-45114-A0**	272
6G5-45251-01	**CM6G5-45251-01**	158-169
6G5-45251-01	**CM6G5-45251-01A**	70-158-169
6G5-45251-01	**TEN01112**	166
6G5-45251-02	**TEN01112**	166
6G5-45383-01	**REC6G5-45383-01**	327-379
6G5-45384-00	**REC6G5-45384-00**	327-379
6G5-45501-21	**REC6G5-45501-21**	381-391-392
6G5-45536-01	**REC6G5-45536-01**	381
6G5-45551-01	**REC6G5-45551-00**	379-391-392
6G5-45560-01	**REC6G5-45560-00**	379-391-392
6G5-45571-02	**REC6G5-45571-00**	379-391-392
6G5-45576-10	**REC6G5-45576-10**	327
6G5-45631-00	**REC6G5-45631-00**	379-391-392
6G5-45941-00-98	**SOL3511-150-15**	403
6G5-45941-00-98	**SOL3513-148-15**	403
6G5-45941-00-98	**SOL3571-158-15**	403
6G5-45945-01-98	**SOL3511-145-19**	403
6G5-45945-01-98	**SOL3513-143-19**	403
6G5-45945-01-98	**SOL3571-153-19**	403
6G5-45947-01-98	**SOL3511-148-17**	403
6G5-45947-01-98	**SOL3513-145-17**	403
6G5-45947-01-98	**SOL3571-155-17**	403
6G5-45949-00-98	**SOL3511-142-23**	403
6G5-45949-00-98	**SOL3511-143-21**	403
6G5-45949-00-98	**SOL3512-142-23**	403
6G5-45949-00-98	**SOL3513-140-21**	403
6G5-45949-00-98	**SOL3571-148-23**	403
6G5-45949-00-98	**SOL3571-150-21**	403
6G5-45952-00-98	**SOL3512-150-15**	403
6G5-45952-00-98	**SOL3514-148-15**	403
6G5-45952-00-98	**SOL3572-158-15**	403
6G5-45970-02-98	**SOL3531-145-15**	403
6G5-45972-02-98	**SOL3531-140-21**	403
6G5-45974-03-98	**SOL3531-140-19**	403
6G5-45976-01-98	**SOL3531-140-23**	403
6G5-45978-03-98	**SOL3531-143-17**	403
6G5-81960-A0	**REC6G5-81960-A0**	116
6G5-85510-10	**REC6G5-85510-11**	121
6G5-85540-10	**REC6G5-85540-12**	119
6G5-85540-11	**REC6G5-85540-12**	119
6G5-85540-12	**REC6G5-85540-12**	119
6G5-W0001-03	**REC6G5-W0001-A3**	252
6G5-W0001-A3-00	**REC6G5-W0001-A3**	247
6G5-W0078-00	**REC6G5-W0078-A1**	152
6G5-W0078-01	**REC6G5-W0078-A1**	152
6G5-W0078-A1	**REC6G5-W0078-A1**	152-378
6G8-11181-00	**REC6G8-11181-A1**	181
6G8-11181-A1	**REC6G8-11181-A1**	215
6G8-11197-01	**PAF20-05030009**	203-205
6G8-11197-A0	**PAF20-05030009**	187
6G8-11325-00	**CM6G8-11325-00**	159-169-181

REF	R.O. / OEM	
6G8-11325-00	**CM6G8-11325-00A**	65-159-180-187-195-201-203-205
6G8-11325-00	**TEN01148**	163-169
6G8-11351-00	**REC6G8-11351-A0**	181
6G8-11351-A0	**REC6G8-11351-A0**	217
6G8-12411-00	**REC6AH-12411-00**	181
6G8-12411-02	**PAF15-07000031**	191
6G8-12411-03	**PAF15-07000031**	195-197-201-203-205-207
6G8-12414-00	**REC6G8-12414-A0**	181
6G8-12414-A0	**REC6G8-12414-A0**	138
6G8-13440-00	**REC6G8-13440-00**	83
6G8-13645-00	**REC6G8-13645-00**	273
6G8-13646-00	**REC6G8-13646-A0**	273
6G8-14198-00	**REC6G8-14198-A0**	273
6G8-15363-00	**PAF15-07050004**	181-185-187-191-195-197-201-203-205-207-209-211-213-214
6G8-15374-00	**REC6G8-15374-00**	273
6G8-41112-02	**REC6G8-41112-02**	140-181
6G8-41114-00	**REC6G8-41114-00**	140
6G8-44532-00	**PAF2.6-04000009**	171
6G8-45113-A1	**REC6G8-45113-A1**	271
6G8-45251-00	**CM6G8-45251-01**	159-169
6G8-45251-00	**TEN01137**	164-169
6G8-46241-00	**REC6G8-46241-00**	267
6G8-818000-10	**PH130-0062**	110
6G8-818000-11	**PH130-0062**	110
6G8-81870-00	**REC6G8-81870-00**	120
6G8-81960-A1	**REC6G8-81960-A1**	117
6G8-W0001-A3	**REC6G8-W0001-A3**	181-216-218
6G9-85540-20	**REC6G9-85540-29**	117-118
6G9-85540-21	**REC6G9-85540-29**	117-118
6G9-85540-22	**REC6G9-85540-29**	117-118
6G9-85540-29	**REC6G9-85540-29**	117-118
6G9-W0001-C4	**REC6G9-W0001-C4**	144
6G9-W0001-C6	**REC6G9-W0001-C6**	144
6GH-45251-00	**CM6G1-45251-03**	159
6H0-81960-00	**REC6H0-81960-00**	116
6H0-82105-02	**PAT85-05000023**	112
6H0-82105-J2	**PAT85-05000023**	112
6H0-W0093-00	**REC6H0-W0093-00**	97
6H1-11372-00	**PAF15-04000005**	187
6H1-11631-03-95	**REC6H1-11631-03K**	264-266
6H1-14485-00	**PAT15-04010202**	171
6H1-15359-01-94	**REC6H1-15359-01-94**	243
6H1-43800-13-4D	**REC6H1-43800-17-8D**	124
6H1-43800-14-4D	**REC6H1-43800-17-8D**	124
6H1-43800-15-4D	**REC6H1-43800-17-8D**	124
6H1-43800-16-4D	**REC6H1-43800-17-8D**	124
6H1-43800-17-8D	**REC6H1-43800-17-8D**	124
6H1-43880-00	**PH200-T041**	122
6H1-43880-02	**PH200-T029**	122
6H1-44144-00	**REC6H1-44144-00**	373
6H1-45214-00	**REC6H1-45214-00**	315-319
6H1-45215-00	**REC6H1-45215-00**	315-319
6H1-45251-01	**CM6H1-45251-01**	158-169
6H1-45251-01	**CM6H1-45251-01A**	158
6H1-45251-01	**TEN01125**	167
6H1-45251-02	**TEN01115**	166-169
6H1-45251-03	**TEN01113**	166-169
6H1-45611-01-00	**REC6H1-45611-00**	373-390-391
6H1-45631-01-00	**REC6H1-45631-01**	373-390-391
6H1-45634-02	**REC6H1-45634-02**	373
6H1-45668-00	**REC6H1-45668-00**	315-319-331-335-337-341-373-383
6H1-81950-00	**REC6H1-81950-01**	115
6H1-81950-01	**REC6H1-81950-01**	115
6H1-85510-00	**REC6H1-85510-00**	121
6H1-W0001-A1	**REC6H1-W0001-00-00**	251
6H1-W0093-01	**REC6H1-W0093-01-00**	97
6H1-W0093-01-00	**REC6H1-W0093-01-00**	243
6H1-W0093-10	**REC6H1-W0093-10**	97
6H14525102	**CM6H1-45251-02**	158-169

REF	R.O. / OEM	
6H14525102	**CM6H1-45251-02A**	69-70-71-158-169
6H2-81960-10	**REC6H2-81960-10**	116
6H2-85540-10	**REC6H2-85540-13**	118
6H2-85540-11	**REC6H2-85540-13**	118
6H2-85540-12	**REC6H2-85540-13**	118
6H2-85540-13	**REC6H2-85540-13**	118
6H2-W0001-20	**REC6H2-W0001-20**	146
6H2-W0093-10	**REC6H2-W0093-10**	96-241
6H3-11181-A2	**REC6H3-11181-A0**	241-248-254
6H3-11193-A1	**REC6H3-11193-A1**	241-255
6H3-11325-01	**CM6H3-11325-01A**	241
6H3-11631-01-96	**REC6H3-11631-01K**	241-262-266
6H3-11633-00	**REC6H3-11633-00**	241-261-262-264
6H3-11635-01	**REC6H3-11635-01K**	241-262
6H3-11636-01	**REC6H3-11636-01K**	241-262
6H3-12411-00	**REC6H3-12411-10**	137
6H3-12411-01	**REC6H3-12411-10**	137
6H3-12411-10	**REC6H3-12411-10**	137-241
6H3-12411-11	**REC6H3-12411-10**	137
6H3-12413-00-1S	**PAF15-07010021**	197-207-241
6H3-12413-00-9M	**PAF15-07010021**	191
6H3-12413-001S	**PAF15-07010021**	183
6H3-12414-A1	**REC6H3-12414-A1**	138-241
6H3-13621-A1	**REC6H3-13621-A1**	274
6H3-13622-A1	**REC6H3-13622-A1**	274
6H3-14198-A1	**REC6H3-14198-A1**	274
6H3-14457-01	**REC6H3-14457-01**	94
6H3-14590-01	**REC6H3-14590-00**	93-98
6H3-41112-A0	**REC6H3-41112-A0**	141-241
6H3-41114-A0	**REC6H3-41114-A0**	141-241
6H3-41217-00	**REC6H3-41217-00**	101
6H3-44311-00	**REC6H3-44311-00**	148
6H3-44323-00-00	**REC6H3-44323-00**	148-154-156
6H3-44352-00	**REC6H3-44352-00**	143-313-317
6H3-44391-00	**PAF15-05000009**	139
6H3-44391-01	**PAF15-05000009**	139
6H3-45113-00	**REC6H3-45113-00**	241
6H3-45113-A0	**REC6H3-45113-00**	253
6H3-45114-A1	**REC6H3-45114-A1**	271
6H3-45123-00	**REC6H3-45123-00**	269
6H3-45127-00	**REC6H3-45127-00**	269
6H3-81800-10	**PH130-0050**	111
6H3-81800-11	**PH130-0050**	111
6H3-82510-00	**REC6H3-82510-03**	114
6H3-82510-01	**REC6H3-82510-03**	114
6H3-82510-02	**REC6H3-82510-03**	114
6H3-82510-03	**REC6H3-82510-03**	114
6H3-85470-10	**REC6H3-85570-10**	104
6H3-85520-00	**REC6H3-85520-00**	107
6H3-85540-10	**REC6H3-85540-11**	118
6H3-85540-10	**REC6H3-85540-13**	118
6H3-85540-11	**REC6H3-85540-11**	118
6H3-85540-11	**REC6H3-85540-13**	118
6H3-85540-12	**REC6H3-85540-11**	118
6H3-85540-12	**REC6H3-85540-13**	118
6H3-85540-13	**REC6H3-85540-13**	118
6H3-W0001-02	**REC6H3-W0001-02**	241-250-254
6H3-W0001-22	**REC6H3-W0001-22**	145
6H3-W0078-00	**REC6H3-W0078-02**	68-69-152-154-156
6H3-W0093-02	**REC6H3-W0093-02**	93-97
6H4-11181-A2	**REC6H4-11181-00**	248-254
6H4-11193-00	**REC6H4-11193-A1**	255
6H4-11610-00	**REC6H4-11610-00-00**	264-266
6H4-11631-00-96	**REC6H4-11631-00K**	264-266
6H4-11631-01-95	**REC6H4-11631-01K**	237-263-266
6H4-11634-01	**REC6H4-11634-01**	237-263-264
6H4-11635-00	**REC6H4-11635-00K**	264
6H4-11635-01	**REC6H4-11635-01K**	237-263
6H4-11636-00	**REC6H4-11636-00K**	264
6H4-11636-01	**REC6H4-11636-01K**	237-263
6H4-11641-00	**REC6H4-11641-00**	237-261
6H4-14198-00	**REC6H4-14198-09**	274
6H4-14198-01	**REC6H4-14198-01**	274

REF	R.O. / OEM	
6H4-14548-00	PAF25-05070019	99
6H4-14984-00	REC6H4-14984-00	94
6H4-14985-00	REC6H4-14985-01	100
6H4-14985-01	REC6H4-14985-01	100
6H4-15369-A1	REC6H4-15369-A1	237
6H4-41112-A0	REC6H4-41112-A0	141-237
6H4-41114-A0	REC6H4-41114-A0	141-237
6H4-41134-A0	REC6H4-41134-A0	269
6H4-44352-00	REC6H4-44352-02	309
6H4-44352-02	REC6H4-44352-02	143-297-301-305-355-357-359-361
6H4-45113-00	REC6H4-45113-00	237
6H4-45113-A0	REC6H4-45113-00	253
6H4-45536-00	PAT40-04000002	301-305-309-313
6H4-45551-00	REC6H4-45551-00	359-389-390
6H4-45560-00	REC6H4-45560-00	359-389-390
6H4-45571-00	REC6H4-45570-00	359-389-390
6H4-81800-10	PH130-0063	110
6H4-81800-11	PH130-0063	110
6H4-81800-12	PH130-0063	110
6H4-W0001-01	REC6H4-W0001-A1	250-254
6H4-W0001-04	REC6H4-W0001-04	237-250
6H4-W0001-21	REC6H4-W0001-21	359
6H4-W0078-00	REC6H4-W0078-00	151
6H4-W0078-A0	REC6H4-W0078-00	359
6H4-W0093-01	REC6H4-W0093-01-00	96
6H4-W0093-03	REC6H4-W0093-03	96-237
6H5-43880-00	PH200-T048	122
6H5-43880-01	PH200-T048	122
6H5-43880-02	PH200-T048	122
6H5-43880-09	PH200-T048	122
6H9-45551-00	REC6H9-45551-00	365-389
6J1-11610-00	REC6J1-11610-00	221
6J4-81800-00	PH130-0062	110
6J4-81800-01	PH130-0062	110
6J8-11181-A1	REC6J8-11181-A2	231
6J8-11181-A2	REC6J8-11181-A2	248
6J8-11325-00	TEN01150	163-229-231
6J8-11631-02-97	REC6J8-11631-02	231-263-266
6J8-12414-A0	REC61A-12414-A0	237
6J8-13411-00	REC6J8-13411-00	83
6J8-24471-00	REC6J8-24471-00	87
6J8-44311-00	REC663-44311-02	357
6J8-45113-A0	REC6J8-45113-00	231-253-254
6J8-81960-00	PAF15-07060001	117
6J8-85540-H2	REC6J8-85540-H2	120
6J8-W0001-21	REC6J8-W0001-21	145-357
6J8-W0078-A1	REC6J8-W0078-A2	150-151
6J8-W0078-C2	REC6J8-W0078-A2	357
6J9-45332-00-CA	REC6J9-45332-00-CA	327-379-391-392
6J9-45371-00	TEN01143	165
6J9-45371-01	CM6J9-45371-01	160-169
6J9-45371-01	CM6J9-45371-01A	72-160-169-327
6J9-45371-01	TEN01133	165-169
6J9-45371-02	CM6K1-45371-02	160-169
6J9-45371-02	CM6K1-45371-02A	72-160-169
6J9-45611-01	REC6J9-45611-00	327-379-391-392
6K1-45371-00	CM6K1-45371-00	161-169
6K1-45371-00	CM6K1-45371-00A	161-169
6K1-45371-00	TEN01144	168-169
6K1-45371-02	TEN01134	165-169
6K1-45945-01-98	SOL3512-145-19	403
6K1-45945-01-98	SOL3514-143-19	403
6K1-45945-01-98	SOL3572-153-19	403
6K1-45947-00-98	SOL3512-148-17	403
6K1-45947-00-98	SOL3514-145-17	403
6K1-45947-00-98	SOL3572-155-17	403
6K1-45970-01-98	SOL3532-145-15	403
6K1-45972-01-98	SOL3532-140-21	403
6K1-45974-02-98	SOL3532-140-19	403
6K1-45976-00-98	SOL3532-140-23	403
6K1-45978-02-98	SOL3532-143-17	403
6K1-82510-06	REC6K1-82510-07	113

REF	R.O. / OEM	
6K1-82570-13	REC6K1-82570-13	128
6K5-11601-02	REC6K5-11601-02	241-262-264-266
6K5-11601-12	REC6K5-11601-12	241-262-264
6K5-11601-22	REC6K5-11601-22	241-262-264
6K5-11631-03-95	REC6K5-11631-03K	264-266
6K5-11635-03	REC6K5-11635-03K	264
6K5-11636-03	REC6K5-11636-03K	264
6K5-14301-03 + 6K5-14302-03 + 6K5-14303-03	REC6K5-14301-03	92-93
6K5-W0001-02	REC6K5-W0001-02	251
6K5-W0078-01	REC6K5-W0078-01	152-156
6K7-11633-00	REC6K7-11633-00	261-265
6K7-13645-A2	REC6K7-13645-A2	276
6K7-13646-A2	REC6K7-13646-A2	276
6K7-81800-10	PH130-0051	110
6K7-W0093-09	REC6K7-W0093-09	97
6K8-41122-A1	REC6K8-41122-A1	141-229
6K8-41124-A1	REC6K8-41124-A1	141-229
6L2-11181-A3	REC6L2-11181-A1	248-254
6L2-11193-A1	REC6L2-11193-A1	254
6L2-13621-00	REC6L2-13621-00	274
6L2-14384-00	REC6L2-14384-00-00	94
6L2-14385-00	REC6L2-14385-00	93-100
6L2-14399-00	REC6L2-14399-00	94
6L2-26301-00	REC6L2-26301-00	129
6L2-41112-A2	REC6L2-41112-A3	141
6L2-41114-A1	REC6L2-41114-A1	141
6L2-41133-A3	REC6L2-41133-A3	268
6L2-41134-00	REC6L2-41134-00	268
6L2-44352-00	REC6L2-44352-00	66-143-155
6L2-44367-00	PAF25-04050004	66-154-155-293-297-355
6L2-45113-A1	REC6L2-45113-A2	253-254
6L2-45214-00	PAF25-04000022	295
6L2-45215-00	PAF25-04000023	295
6L2-45567-12	PAF25-04000004-3	295
6L2-45567-14	PAF25-04000004-5	295
6L2-45577-00-10	PAF25-04070005-1	295-355
6L2-45577-00-12	PAF25-04070005-3	295
6L2-45611-00	REC6L2-45611-00	355-388-389
6L2-45987-01	REC6L2-45987-00	295-355-357-405
6L2-81800-10	PH130-0061	110
6L2-81800-11	PH130-0061	110
6L2-81800-12	PH130-0061	110
6L2-W0001-A2	REC6L2-W0001-03	250-254
6L2-W0001-C3	REC6L2-W0001-C3	145
6L2-W0078-00	REC6L2-W0078-00	151-155
6L2-W0093-00	REC6L2-W0093-00	95
6L5-24251-00	PAF4-04120005	64-80-81-82
6L5-44322-00	PAF2.6-03000015	154-283
6L5-44323-00	REC6L5-44323-00	149
6L5-44352-00	PAF2.6-03000100	64-283
6L5-44352-00	REC6L5-44352-00	143-154
6L5-45251-02	CM6L5-45251-02	159-343
6L5-45251-02	CM6L5-45251-02A	159
6L5-45251-02	TEN01117	166-169
6L5-45251-03	CM6L5-45251-02	345
6L5-45316-09	PAF2.6-03000003	283
6L5-45317-09	PAF2.6-03000002	283
6L5-45533-00-20	PAF2.6-03000017	283
6L5-45551-00	PAF2.6-03000018	283
6L5-45560-00	PAF2.6-03000019	283
6L5-45616-00	PAF4-03080000	283-285-287-405
6L5-45616-02	REC647-45616-02	345
6L5-45631-00	PAF2.6-030000201	283
6L5-45631-00	PAF2.6-03000202	283
6L5-45943-00-EL	PAF2.6-03010000	283
6L5-45949-00-EL	PAF2.6-03010000	402
6L5-45949-00-EL	SOL3011-073-05S	402
6L5-45987-01	PAF4-03000025	345
6L6-45371-00	TEN01103	164-169
6L8-G3118-01	REC6L8-G3118-01	134
6M6-14385-00	REC6H4-14985-01	100
6N0-E1603-00	REC6G1-11610-00	223

REF	R.O. / OEM	
6N0-G2177-00	REC6N0-G2177-00	133
6N0-G5251-00	TEN01118	346
6N0-G5551-00	REC6N0-G5551-00	346-387
6N0-G5551-A0	REC68T-45551-00	289
6N0-G5560-00	REC6N0-G5560-00	346-387
6N0-G5571-00	REC6N0-G5571-00	346-387
6N0-W0001-20	REC6G1-W0001-C1	346
6N0-W0078-A0	REC6G1-W0078-A1	150
6N0-WG525-00	CM6G1-45251-03	159
6N6-W0001-A3	REC6E5-W0001-A2	245
6N6-W0078-00	REC6N6-W0078-02	152
6N6-W0078-02	REC6N6-W0078-02	152
6N6-W0093-02	REC6N6-W0093-02	97-245
6N7-11411-00	REC6N7-11411-00	245-256
6N7-81800-00	PH130-0051	110
6N7-81800-01	PH130-0051	110
6N7-81800-10	PH130-0051	110
6P2-11181-00	REC6P2-11181-00	213-216-218
6P2-11182-00	REC6P2-11182-00	213-216-218
6P2-11193-00	REC6P2-11193-00	213
6P2-11194-00	REC6P2-11194-00	213
6P2-1131B-00	REC6P2-1131B-00	213
6P2-13761-00	REC6P2-13761-00	89-90
6P2-13906-00	REC6P2-13906-00	89-90
6P2-13907-00	REC6AW-13907-00	86
6P2-24563-00	REC6P2-WS245-00	81
6P2-41112-00	REC6P2-41112-00	213
6P2-41114-00	REC6P2-41114-00	213
6P2-41122-00	REC6P2-41122-00	213
6P2-44150-00	REC6P2-44150-00	339
6P2-44323-0	REC6P2-44323-00	149
6P2-44323-00	REC6P2-44323-00	339
6P2-45300-20-8D	REC422-B25F	278-339
6P2-45300-21-8D	REC422-B25F	278-339
6P2-45331-00-9S	REC6P2-45331-00-9S	339
6P2-45501-00	REC6P2-45501-01	339
6P2-45501-10	REC6P2-45501-11	339
6P2-46241-01	REC6P2-46241-02	213
6P2-46241-02	REC6P2-46241-02	267
6P2-81960-02,03	REC6P2-81960-03	116
6P2-W0001-00	REC6P2-W0001-01	217
6P2-W0001-01	REC6P2-W0001-01	213-217
6P2-W0078-00	REC6P2-W0078-00	153
6P2-WS245-00	REC6P2-WS245-00	81
6P3-24563-00	REC6P3-WS24A-00	81
6P3-24564-00	REC6P3-24564-00	71-72-73-81
6P3-45300-40-8D	REC429-B25F	278-339
6P3-45300-41-8D	REC429-B25F	278-339
6P3-WS24A-00	REC6P3-WS24A-00	81
6P3-WS24A-01	REC6P3-WS24A-00	81
6R0-44366-00	PAF4-03000021	283
6R3-81960-10	REC6R3-81960-10	116
6R3-82563-00	REC6R3-82563-01	122
6R3-82563-01	REC6R3-82563-01	122
6R3-85570-01104	REC6R3-85570-01	104
6R3-W0001-A3	REC6R3-W0001-03	251
6R4-13200-00	REC6R4-13200-02	84
6R4-13200-01	REC6R4-13200-02	84
6R4-13200-02	REC6R4-13200-02	84
6R5-11361-11-93	REC6R5-11631-11K	245
6R5-11603-00	REC6R5-11603-00	265-266-267
6R5-11631-11-93	REC6R5-11631-01K	265-266-267
6R5-11631-11-93	REC6R5-11631-11K	265
6R5-11633-10	REC6R5-11633-00	245-247-261-265
6R5-11634-00	REC6R5-11634-00	265
6R5-11634-10	REC6R5-11634-00	245-247-265
6R5-11642-11-93	REC6R5-11642-01K	245-265-266-267
6R5-11642-11-93	REC6R5-11642-11K	265-266-267
6R5-116950-0	REC6R5-11650-10	245
6R6-W0001-02	REC6R6-W0001-02-00	250-254
6R7-11181-A1	REC6R7-11181-A0	248-254
6S1-41136-00	REC6S1-41136-00	270
6S1-85885-00	REC6S1-85885-00	90-102
6T4-45836-00	CM6T4-45836-00	159

REF	R.O. / OEM	
6T4-45836-00	TEN01122	164
6T5-45251-00	TEN01139	167
6T5-45371-00	CM6T5-45371-00	161
6T5-45371-00	TEN01119	165
6T5-45373-00	TEN01120	166
6T545373-00	CM6T5-45373-00	159
6U0-45251-00	TEN01157	165-169
6U4-45251-00	TEN01159	167-169
6U4-45373-00	TEN01158	166-169
6UO-45251-00	CM6U0-45251-00	159
6V3-45251-01	TEN01138	164
6X2-85885-10	REC6X2-85885-10	103
6Y1-24268-00	PAF15-10000003	76
6Y1-24305-00	GS31075	76
6Y1-24305-01	GS31075	76
6Y1-24305-02	GS31075	76
6Y1-24305-05-00	GS31074	76
6Y1-24305-05-00	GS31075	76
6Y1-24305-06	GS31074	76
6Y1-24305-06-00	GS31074	76
6Y1-24305-06-00	GS31075	76
6Y1-24306-55-00	PAF15-09000000	74
6Y1-24360-52-00	GS31183	74
6Y1-24360-52-01	GS31183	74
6Y1-24360-52-02	GS31183	74
6Y1-24360-52-51	GS31183	74
6Y1-24360-52-52	GS31183	74
6Y2-24305-05-00	GS31076	76
6Y2-24305-06-00	GS31076	76
6YJ-24167-00	PAF15-10000002	75
6YJ-24260-00	PAF15-10020000	76
6YJ-24260-10	PAF15-10020000	76
6YJ-24610-00	PAF15-10010000	75
6YJ-24610-01	PAF15-10010000	75
6YK-24305-01-00	GS31076	76
6YL-24305-01-00	GS31074	76
6YL-24305-01-00	GS31075	76
703-48152-00	PAF15-13020007W	128
703-48205-10	REC703-48205-16	126
703-48205-11	REC703-48205-16	126
703-48205-12	REC703-48205-16	126
703-48205-13	REC703-48205-16	126
703-48205-14	REC703-48205-16	126
703-48205-15	REC703-48205-16	126
703-48205-16	REC703-48205-16	126
703-48205-17	REC703-48205-16	126
703-48205-18	REC703-48205-16	126
703-48205-1A	REC703-48205-16	126
703-48205-1B	REC703-48205-16	126
703-48205-20	REC703-48205-16	126
703-48205-21	REC703-48205-16	126
703-48230-10	REC703-48230-14	126
703-48230-11	REC703-48230-14	126
703-48230-12	REC703-48230-14	126
703-48230-13	REC703-48230-14	126
703-48230-14	REC703-48230-14	126
703-48230-15	REC703-48230-14	126
703-48230-16	REC703-48230-14	126
703-48230-17	REC703-48230-14	126
703-48230-18	REC703-48230-14	126
703-48230-1A	REC703-48230-14	126
703-48230-20	REC703-48230-14	126
703-48230-21	REC703-48230-14	126
703-48245-00	PAF15-13010010W	129
703-48293-10	PAF15-11000002W	128
703-48345-01	PAF25-07000007W	127
703-82510-12	PAF15-13000200W	113
703-82510-43	REC703-82510-44	114
703-82563-00	PAE4-10040100W	122-127
703-82563-01	PAE4-10040100W	122-127
703-82563-02	PAE4-10040100W	127
704-48205-11	REC704-48205-R0	127
704-48205-12	REC704-48205-R0	127
704-48205-13	REC704-48205-R0	127
704-48205-14	REC704-48205-R0	127

REF	R.O. / OEM	
704-48205-15	REC704-48205-R0	127
704-48205-B0	REC704-48205-R0	127
704-48205-B1	REC704-48205-R0	127
704-48205-P0	REC704-48205-R0	127
704-48205-P1	REC704-48205-R0	127
704-48205-R0	REC704-48205-R0	127
704-48207-20	REC704-48207-R0	127
704-48207-21	REC704-48207-R0	127
704-48207-22	REC704-48207-R0	127
704-48207-30	REC704-48207-R0	127
704-48207-31	REC704-48207-R0	127
704-48207-39	REC704-48207-R0	127
704-48207-P1	REC704-48207-R0	127
704-48207-R0	REC704-48207-R0	127
704-82570-08	REC704-82570-12	127
704-82570-10	REC704-82570-12	127
704-82570-11	REC704-82570-12	127
704-82570-12	REC704-82570-12	127
7FK-12158-00	PA166F-010011	173-175-179
7FK-12165-00	PA166F-010010	173-175-179
7NJ-12117-00	PAF8-05030006	173-175
7NJ-12118-00	PAF8-05030007	173-175-179
90101-06M56	REC90101-06M56	353
90101-08001	PAGB/T5783-M8X35	235
90105-06035	PAGB/T5783-M6X35	189
90105-06039	PAGB/T5783-M6X16	173
90105-06M01	REC90105-06M01	363
90105-06M14	PAGB/T5783-M6X16	175
90105-06M25	PAGB/T5782-M6X45	175
90105-08046-00	PAF4-04000033	175
90105-081A7	PAGB/T5783-M8X25	189
90105-08M36	PAF4-04000034	173-179-180
90105-08M36-00	PAF4-04000034	175
90105-08M76	PAF4-04000001	171
90105-08M78	PAF15-07000028	180-185
90105-090006	PAF20-05000002	187
90105-10M00	PAT85-00000012	323-327-331-335-337-375-379
90105-10M12	PAF25-00000011	295
90105-16M67	PAT85-00000012	315-319
90109-06M65	PAF25-05050006	191-195-197-201-203-205-207
90109-08022	REC90109-08022	239-243-247
90109-08M63	PAF25-05050019	193-199-207
90109-08M71	REC90109-08M71	245
90119-06M04	PAGB/T5783-M6X30	227
90119-06M10	REC90119-06M10	325-329-333-377-385
90119-06M48	PAGB/T5783-M5X12	295
90119-06M80-00	PAGB/T5783-M6X14	177
90119-06MA2	PAGB/T5783-M6X20	179-227
90119-06MA3	PAF8-05000022	187
90119-06MA3	PAGB/T5783-M6X20	191
90119-06MA3	PAGB/T5783-M6X25	187-191-235
90119-06MA4	PAGB/T5783-M6X30	235
90119-06MA5	PAGB/T5782-M6X35	191-203-205-233-241
90119-06MA5	PAGB/T5783-M6X25	191
90119-06MA5	PAGB/T5783-M6X30	195
90119-06MA5	PAGB/T5783-M6X35	243
90119-06MAS	PAGB/T5783-M6X35	191
90119-08M01	PAGB/T5782-M8X80	191
90119-08M13	REC90119-08M13	321-357-371
90119-08M14	REC90119-08M14	317-325-329-333-335-339-341-377-381-385-386
90119-08M15	REC90119-08M15	301-305-309-13-361
90119-08M21	REC90119-08M21	231
90119-08M33	REC90119-08M33	317
90119-08M87	REC90119-08M87	321
90119-08MA5	PAGB/T5783-M6X25	235
90119-09M00	PAF25-05000002	191-197-207
90142-05M06	PAGB/T820-M5X30	299
90149-06M00	REC90149-06M00	365
90151-05M05	PAGB/T820-M5X30	295
90152-05000	REC90151-05M00	315-319

REF	R.O. / OEM	
90152-05010	PAGB/T820-M5X30	303-311
90152-05011	PAGB/T820-M5X20	293
90152-05M03	PAGB/T820-M5X25	289
90152-05M04	PAGB/T820-M5X25	350
90152-05M06	PAGB/T820-M5X30	307
90170-012138	REC90170-12138	365
90170-12138	REC90170-12138	299-303-307-311-359-361-369
90170-16M01	REC90170-16M01	315-319-323-327-371-375-379
90170-16M01-00	REC90170-16M01	373
90170-16M19	REC90170-16M19	331-335-337-383
90170-20137	PAF25-05000026	195
90170-28M37	PAF15-07030005	185
90170-30003	PAF20-05000029	189
90170-35M47	PAF25-05000026	193
90171-10M01	PAF15-06000016	349
90171-10M01	REC90171-10M01	289-291-293-405-351
90171-14013	REC90171-14013-00	295-353-355-357-405
90171-16011	REC90171-16011	299-303-307-311-315-319-359-361-365-369-371
90171-16011-00	REC90171-16011	373
90171-18M04	REC90171-18M04	323-327-331-335-337-341-375-379-383-405
90179-08M06	REC90179-08M06	291-293-348-351
90179-09M02	REC90179-09M02	353
90179-10M14	REC90179-10M14	295-355-357
90183-02M03	REC90183-02M03	315-319-331-335-337-341-373-383
90185-05002	PAGB/T6182-M5	289-293-315-319-323-327-331-335-337-341-350
90185-05002	PAGB/T889.1-2000	295
90185-22043	PAF15-01010007	131
90185-22M11	PAF15-01010007	131
9020-14377	REC90201-14377	227-260
90201-02M00	REC90201-02M00	331-335-337-341-383
90201-06M94	PAGB/T5287-6	180-185
90201-08784	PAF20-05030013	189
90201-08818	PAF4-04000006	177
90201-08818	PAGB/T5783-M5X12	183
90201-08818-00	PAF4-04000006	171
90201-08M54	PAF4-03000026	283-285-287-345-405
90201-10144	PAF25-05050018	201
90201-10M01	PAGB/T96-10	293-349
90201-10M01	REC90201-10M01	289-405
90201-10M06	PAF25-05050018	193-199-207
90201-11M49	PAF4-03000006	287-343
90201-12565	REC90201-12565	225-260
90201-13198	PAF2.6-03000021	283
90201-13201	PAF15-07040017	180-185
90201-15017	PAF15-06000020-1	293
90201-15423	PAF20-05030011	189
90201-16M00	REC90201-16M00	331-335-337-383
90201-17682	REC90201-17682	291-293-349-351
90201-17M00-00	REC90201-17M00	373
90201-20417	PAF25-04060007	295
90201-20417	REC90201-20417	233-235-239-241-243-260-261-353-355-357
90201-20M27	REC90201-20M27	229-260
90201-21M75	REC90201-21M75	245-247-261
90201-22008	PAT40-04050007	311
90201-22429	REC90201-22429	299-303-307-359-361-365-369
90201-22M01	REC90201-22M01	325-329-333-377-381-385
90201-23008	PAF2.6-04000003	173
90201-23M01	REC90201-23M01	245-247-261
90201-266P2	PAF4-04000004	175
90201-27M00	PAT40-04000008	301-305-309-313

REF	R.O. / OEM	
90201-30M92	REC90201-30M92	323-327-375-379
90201-31M00	REC90201-31M00	331-383
90201-42014	REC90201-42014	339
90201-46M29	REC90201-46M29	227
90202-12060	PAF25-02000019	297-301-305-309-367-371
90204-11M49	PAF4-03000006	285-345
90206-22M19	REC90206-22M19	325-329-333-377-381-385
902082-04010	REC90282-04010	365
90209-18112	REC90209-18112	221-223-225-260
90209-20M23	REC90209-20159	227-260
90209-24M03	REC90209-24M03	229-260-261
90209-27M07	REC90209-27M07	233-235-260-261
90214-48M03	REC90214-48M03	365-369
90250-03M10	REC90250-03M10	343
90250-05010	REC90250-05010	291-293-295-349-351-353-355-357
90250-05036	REC90250-05036	347
90250-05046	REC90250-05046	345
90250-06023	REC90250-06023	299-303-307-311-359-361-363-365-369
90250-07M02	REC90250-07M02	315-319-371
90250-07M02-00	REC90250-07M02	373
90250-08M07	REC90250-08M07	323-327-335-375-379
90280-03017	PAGB/T1099-3X5X13	201
90280-03024	PAF25-04000015	155-297
90280-03024	REC90280-03024	154-155-156-309-313-346-347-349-357-359
90280-03M01	PAGB/T1099-3X5X13	180-185-189-195-203-205
90280-03M03	REC90280-03M03	154-156-301-305-317-355-361-369
90280-04002	REC90280-04002	335
90280-04M00	REC90280-04M00	156-363-367
90280-04M04	REC90280-04M04	321-371
90280-04M04-00	REC90280-04M04	373
90280-04M05	REC90280-04M05	155-156-157-325-329-333-339-377-381-385-386
90280-04M06	PAF25-05000024	199
90280-04M06	PAF4-04000019	193-207
90280-05049	REC90280-05049	229
90282-04010	REC90282-04010	315-319-323-353-357-359-369-371-373-375
90282-04M00	REC90282-04M00	327
90304-08002	REC90340-08002	327-331-335-337-341
90340-08002	REC90340-08002	283-285-287-289-291-262-299-303-307-311-315-319-323-345-350-353-357-361-363-369-370-373-379-383
90340-08014	REC90340-08002	348-359
90340-08M04	REC90340-08002	295-343-347-365-375
90340-14M00	PAF15-04000002	237-241
90340-14M06	PAF15-04000002	191-195-197-201-203-205-207-209-211-213
90344-51003	PAF15-07010004	203-205
90381-14020	REC626-45316-09	351
90381-20001	REC90381-20001	133
90386-10M16	PAT85-01010203	133
90386-18M35	PAT85-00000017	133
90386-18M63	REC90386-18M63	133
90386-22M13	REC90386-22M13	133
90386-22M15	PAF15-01010302	133
90386-22M15	PAF25-01010002	133
90386-22M98	REC90386-22M98	133
90386-25M31	REC90386-25M31	133
90386-30048	PAF15-01000004	133
90386-30M60	PAF15-01000006	133
90386-30M77	PAT85-01020005	133
90386-30M77	REC90386-30M77	133
90386-30M78	PAT85-01020003	133

REF	R.O. / OEM	
90386-38M89	REC90386-38M89	133
90386-44M03	PAF25-01000004	133
90386-52M02	PAF25-01000001	133
90387-06119	REC624-42542-00	98
90387-06806	PAF4-00000001	285-287
90387-06M14	PAF4-00000001	345
90387-06M69	PAF25-03000007	133
90387-13001	PAF15-07040009	185
90387-13002	PAF15-07040011	185
90387-13006	PAF20-05030006	189
90387-13M56	PAF15-07040012	180-185
90387-32002	REC90387-32002	229
90389-22M01	REC90389-22M01	299-303-307-311-361-365-405
90389-25M00	REC90389-25M00	315-319-371-405
90401-20M00	PAF15-07010003	183-191-197
90430-06014	PAF25-05050007	191-195-197-201-203-205-207
90430-06M03	REC90430-06M03	209-211-213-214-347-363-365
90430-08003	REC90430-08020	292-303-307-311-315-323
90430-08020	REC90430-08020	283-285-287-289-291-299-327-331-335-337-341-343-345-346-347-348-350-353-355-357-359-361-363-365-369-370-375-379-383-386
90430-08020-00	REC90430-08020	373
90430-08143	PAF4-04000006	197-209-211
90430-08800	PAF4-04000006	179
90430-08800-00	PAF4-04000006	175
90430-12072	PAF25-02000005	297
90430-12072	REC90430-12072	301-305-309-361-367-371
90430-12072-00	REC90430-12072	373
90430-14115	PAF15-04000003	195-197-201-207-209-211-213-235-239-241
90430-14115	PAF15-04000003	237
90430-14M09	PAF15-04000003	191
90445-07MA3	PAF2.6-04000015	237
90445-09061	PAF15-05000012	183
90445-09068	PAF25-03000008	191-197-207
90445-09086	PAF15-05000013	183
90445-09095	PAF25-03000009	191-197-207
90445-09104	PAF15-05000014	183-197-207
90445-09104	PAF25-03000009	195
90445-09105	PAF25-03000011	191
90445-09251	PAF25-03000011	195
90445-09807	PAF4-04000012	175
90445-09808	PAF2.6-04000007	173
90445-10M40	PAF40-05000053	209
90445-10M46	PAF15-07010007	183
90464-07M05	PAF25-05000016	241
90465-06M86	PAT36-04000023	179
90465-08M83	PAF15-07010015	195
90465-08M99	PAGB/T5783-M5X12	171
90465-11M10	PAHT-2.5X50	293
90465-11M10	PAHT-2.5X60	180-191-197-207-209-213-301-305-309-313-317-321-325
90465-11M10	PAHT2.5X50	187
90465-11M59	REC09401-11425	213
90467-06016	PAHT-2.5X60	221-225-231-237-239-241
90467-08004	PAF4-04000030	75-243
90467-08M01	PAF4-03000005	285-287-345
90467-09M09	PAF4-04000030	191-225
90467-13M13	PAF4-05000010	75
90472-00247	NGKB8HS-10	243
90480-06M19	PAF20-05000036	189
90480-10627	PAF20-05000034	189
90480-10M16	PAF15-07050003	185
90480-12072	PAF15-07010027	185-209-211
90480-18065	REC90480-18065	235-239

REF	R.O. / OEM	
90480-20M05	REC90480-20M05	139-209-211-243-245-247
90501-10064	PAF4-03030003	283
90501-10065	PAF25-04060002	295-355-357
90501-10M77	REC90501-10M77	331-335-337-341-383
90501-11M10	REC90501-11M10-00	329-333-339-381-385
90501-120A5	PAF20-05030007	189
90501-12M40	PAF15-07040014	180-185
90501-12M41	PAF15-07040013	185
90501-12M48	REC90501-12M48	315-319-373
90501-14M02	REC90501-14M02	235
90501-14M06	PAF15-06070002	291-349-351
90501-150A0	PAF15-06070002	293
90501-15M01	PAT40-04050002	361
90501-16233	REC90501-16233	369-371
90501-16M01	REC90501-16M01	359-365
90501-16M11	REC90501-16M11	139-209-211-243-245-247
90501-16M37	REC90501-16M37	323-327-375-379
90501-18001	PAF60-04020002	303-307-311
90501-450A2	REC90501-450A2	339
90606-12019	REC93606-12019	205
907-94469-05	PAF40-0701000EI	79
907-94469-05	REC90794-46866	78
907-94469-13	REC90794-46868	78
91490-25030	PAGB/T91-1.6X12	283-285-287-345
91490-30020	PAGB/T91-2.5X20	349
91490-30020	REC91490-30025	289-291-293-351
91490-30022	PAGB/T91-1.6X12	295-355
91490-30025	REC91490-30025	299-303-307-311-315-357-361-365
91490-30030	REC91490-30030	353-359-405
91490-30040	REC91490-30040	343
91490-40025	REC91490-40030	319-369-371
91490-40030	REC91490-40030	323-327-331-335-337-341-375-379-383
91490-40030-00	REC91490-40030	373
91690-30010	PAGB/T879.4-3X20	235
91810-03014	PAF15-07000001	181
92-858026QB1	RM92-858026QB1U6	84
92-858027QB1	RM92-858027QB1U3	84
92-8M0086220	RM92-8M0086220U6	84
92-8M0086221	RM92-8M0086221U3	84
92885-06600	PAGB/T97.1-6	177
92903-06600	PAGB/T848-6	203-205
92903-06600	PAGB/T97.1-6	187-197-207
92907-04600	PAGB/T97.1-4	195
92955-08600-00	PAGB/T97.1-8	177
92990-06300	PAGB/T861.1-6	293
92990-06300	PAGB/T861.1-87	283-287-289-295-343-347
92990-06600	PAGB/T97.1-6	185-231-301-343-347-349-367
92990-08600	PAGB/T97.1-8	367
92990-14200	PAGB/T97.1-14	355-357-405
92990-14200	PAGB/T97.1-8	295
92990-16200	REC92990-16200	359-369-405
92990-18200	REC92990-18200	323-327-331-335-337-375-379-405
92995-05600	PAGB/T97.1-5	191-197-207
92995-05600	PAGB/T97.1-8	183-203-205
92995-06600	PAGB/T5783-M5X12	237
92995-06600	PAGB/T5783-M5X12	185
92995-06600	PAGB/T5783-M6X16	371
92995-06600	PAGB/T96-6	195
92995-06600	PAGB/T97.1-6	171-173-175-179-180-195-197-201-203-205-209-211-213-221-223-225-235-239-287-289-291-317-321-339-351-355
92995-06600	PAGB/T97.1-8	185-227-229-233-241

REF	R.O. / OEM	
92995-08600	PAGB/T97.1-8	179-209-214-325-329-333-335-337-341-343-363-369-377
92995-10100	PAGB/T97.1-10	299
92995-10600	PAGB/T97.1-8	295-299-303-307-311-315-319-331
9306-306V5	REC93306-306V5	233-258
93101-10M14	PAF4-03000027	285-287
93101-10M14	REC93101-10M14	345
93101-10M25	REC93101-10M25	221
93101-11M23	REC93101-11M23	289-346
93101-12M70	REC93101-12M70	341
93101-13018	REC93101-13018	227
93101-13M12	PAF4-03050002	283-285
93101-13M12	REC93101-13M12	287-345
93101-13M27	REC93101-13M27	270
93101-14M01	REC93101-14M01	225
93101-15074	REC93101-15074	289-346-347
93101-16001	REC93101-16001	229-233
93101-17054	REC93101-17054	291-293-349-351
93101-18050	REC93101-18050	347
93101-20001	REC93101-20048	292
93101-20048	REC93101-20048	291-349-351-363
93101-20M07	REC93101-20M07	295-353-355-357
93101-20M29	REC93101-20M29	221-225
93101-20M34	REC93101-20M34	223
93101-22067	REC93101-22067	353-355-359-365-367-369
93101-22067	REC93101-22M00	297
93101-22M00	REC93101-22M00	299-303-307-311-361-363
93101-22M15	REC93101-22M15	245-247
93101-22M60	REC93101-22M60	301-305-361
93101-23070	REC93101-23070	317-357-359-369
93101-250-18	REC93101-25018	227
93101-25M03	REC93101-25M03	315-319-321-371
93101-25M03-00	REC93101-25M03	373
93101-25M28	REC93101-25M35	231
93101-25M57	REC93101-25M57	309-313
93101-28M16	REC93101-28M16	325-329-333-335-339-377-381-385-386
93101-300002	REC93101-30002	335-337
93101-30M17	REC93101-30M17	323-327-331-375-379-383
93101-30M33	REC93101-30M33	235
93102-10004	PAF4-04060004	177-179
93102-15M32	REC93102-15M32	220
93102-18M21	PAF15-07040008	180-185
93102-20070	PAF2.6-04010001	220
93102-20108	PAF2.6-04010001	171-177-179
93102-20108	PAGB/T97.1-8	183
93102-20M25	REC93102-20M25	223-225
93102-22010	PAF20-05030005	189
93102-23096	REC93102-23096	237
93102-25008	REC93102-25008	229
93102-25014	PAF15-07030006	189
93102-25090	PAF4-04010004	177
93102-25090	PAGB/T5783-M5X12	183
93102-25M28	REC93102-25M28	237
93102-25M48	REC93102-25M48	227
93102-25M52	PAF15-07030007	183
93102-26M27	REC93102-26M27	231
93102-28135	REC93102-28135	239
93102-30M05	REC93102-30M05	243
93102-30M23	REC93102-30M23	241
93102-30M56	REC93102-30M56	233
93102-32M07	REC93102-32M07	229-239
93102-35M13	REC93102-35M13	245-247
93102-35M18	REC93102-35M18	235
93102-35M47	PAF25-05020002	193-199
93102-35M51	PAF15-07030006	183
93102-36M02	REC93102-36M02	243
93102-36M24	REC93102-36M24	241
93102-37004	PAF25-05050021	189
93102-37M40	PAF25-05050021	193-195-199-201-203-205-207
93102-38008	REC93102-38008	211-213
93102-38M59	REC93102-38008	209
93102-40M14	REC93102-40M14	245-247
93102-43M42	PAF25-05020003	193-195-199-201-203-207
93102-48009	REC93102-48009	209
93102-60004	REC93102-60004	211
93102-63008	REC93102-63004	213
93103-09M41	PAF2.6-03000004	283
93103-10052	REC93103-10052	343
93103-11051	REC93103-11051	343
93104-16M01	REC93104-16M01	235-237
93104-16M04	REC93104-16M01	231
93104-18049	REC93104-18049	239
93104-20M02	REC93104-20M02	243
93104-22M07	REC93104-22M07	335
93106-09014	REC93106-09014	305-309-313-317-321-325-329-333-335-339-369-371-377-381-385
93106-09014-00	REC93106-09014	373
93106-18M01	REC93106-18M01	241
93109-44M00	REC93109-44M00	131
93110-23M00	REC93110-23M00	227
93210-05001	PAF2.6-03000009	283
93210-06ME6	REC90430-08020	295
93210-06ME6	REC93210-06ME6	289-291-292-297-301-351-361
93210-07003	REC93210-07540	329
93210-09004	PAF2.6-04060002	171
93210-12MG9	PAF25-05050013	193-199-207
93210-13M63	PAGB/T3452.1-13X2	64-65-68-69-70-71-180-187-195-201-203-205
93210-14515	PAF25-05050014	193-199-207
93210-19MJ1	REC93210-19MJ1	211-213
93210-22164	PAGB/T3452.1-25.8X2	355
93210-22M02	REC93210-22M02	235
93210-24M79	PAF4-04000008	177-180-185-201-203-205
93210-24M79	PAJASOF40431-025	171-181-187-191-195-197-207-209-211-213-214
93210-25552	REC93210-25552	211-213
93210-26130	PAGB/T3452.1-25.8X2	297-355
93210-33M49	PAJASOF404-19-033	335-339
93210-33M85	PAJASOF404-19-033	283
93210-33MG4	REC93210-33MG4	301-305-309-313-361
93210-33MH2	PAF25-05050015	193-199-207
93210-35537	PAF4-04060002	171-177
93210-35537	PAGB/T345.2-D32.5XD1	179
93210-37160	REC93210-37160	325-329-333-335-339-341-377-381
93210-37M67	REC93210-37M67	385-386
93210-41042	REC93210-41042	357-359-367-369
93210-42101	REC93210-42101	343
93210-42159	REC93210-42159	223-225-231-239
93210-42M70	REC93210-42M70	225
93210-44398	PAJASOF404-31-045	351
93210-44398	REC93210-44398	154-155-289-291
93210-45161	PAF25-04050003	66-154-155-297-355
93210-46044	REC93210-46044	317-321-371
93210-46044-00	REC93210-46044	373
93210-46M16	REC93210-46M16	227-229-241-243
93210-48001	PAJASOF40424-050	313
93210-48214	PAJISB2401P48	283-285
93210-48214	REC93210-48214	287-341-345
93210-48MG8	REC93210-48MG8	301-309-361
93210-49046	REC93210-49046	154-289-293-317-321-346-359-369-371
93210-49046-00	REC93210-49046	373
93210-53M08	REC93210-53M08	289-346
93210-54534	REC93210-54534	333-339-385
93210-54M54	REC93210-54M54	223
93210-55M14	REC93210-54534	325-329-377-381
93210-56M80	PAF15-06080003	231-291-293-351
93210-57M00	REC93210-57M00	363
93210-57M09	REC93210-57M09	291-293-349-351
93210-58144	REC93210-58677	325-329-377-381
93210-58677	REC93210-58677	347
93210-58M21	REC93210-58M21	229-237
93210-59MG7	REC93210-59MG7	154-156-301-305-309-313-361
93210-60MA3	REC93210-60MA3	357
93210-62269	REC93210-62269	239-243
93210-64488	REC93210-65752-00	333-335
93210-64ME7	REC93210-64ME7	295-355
93210-65M50	REC93210-65M50	233-235-241-295-355
93210-66M98	REC93210-66M98	359-365-369
93210-69MG6	REC93210-69MG6	299-303-307-311-341-361
93210-74M35	REC93210-74M35	245-247
93210-74MG5	REC93210-74MG5	299-303-311-361
93210-85M97	REC93210-85M97	371
93210-85M97-00	REC93210-85M97	373
93210-86M38	REC93210-86M38	155-156-157-325-329-333-339-377-381-385-386
93210-86M39	REC93210-86M39	315-319-323-375
93210-94003	REC93210-94003	335-341
93210-97M55	REC93210-97M55	327-379
93211-04001	REC93211-04001	245-247
93211-04384	REC93211-04384	331-337-383
93306-001U1	REC93306-001U1	299-303-307-311-361-394-395-396
93306-004UO	PAGB/T276-6004C2	345
93306-004YH	PAGB/T276-6004C2	289
93306-00501	REC93306-00501	291-293-349-351-393-394
93306-00519	REC93306-00519	347-393
93306-00612	PAGB/T276-6006/P6	295
93306-00612	REC93306-00612	353-355-357-394-395
93306-00702	REC93306-00702	359-365-369-394-395-396
93306-20401	REC93306-204Y7	363
93306-204U0	REC93306-204U0	221-223
93306-205B2	PANTN6205C3	179
93306-205U7	REC93306-205U7	227-257
93306-205YD	PAGB/T276-6004C2	177
93306-205YD	PAGB/T5783-M5X12	183
93306-206U5	REC93306-206U5	243-258
93306-207U0	REC93306-207U0	315-319-371
93306-207U0-00	REC93306-207U0	373
93306-208U0	REC93306-208U0	245-247-258-259-323-375-393-397
93306-209U0	REC93306-209U0	327-335-379-397-398-399-400
93306-210U0	REC93306-210U0	331-337-383-399-400
93306-240U0	REC93306-204U0	225
93306-272Y2	PAGB/T276-62/22/P6	171
93306-303V1	REC93306-306V1	235
93306-305-U8	REC93306-305U8	237-258
93306-305U3	REC93306-305U3	229-231-257-258
93306-306V1	REC93306-306V1	241
93306-307U0	REC93306-307U0	233-235-258
93310-112V0	REC93310-112V0	221-223-257-262
93310-32337	REC93310-32337	247-265
93310-323V6	REC93310-32337	245
93310-32668	REC93310-32668	247
93310-418U0	REC93310-418U0	225-257
93310-418V1	REC93310-418V1	221-223-257
93310-620V5	REC93310-620V5	227-257
93310-62406	REC93310-624U5	229-257-258
93310-636U4	REC93310-636U4	243-258
93310-727U0	REC93310-727U0	233-258
93310-727V7	REC93310-727V7	235-258

REF	R.O. / OEM	
93310-730V8	REC93310-730V8	239-243-258
93310-835U8	REC93310-835U8	243-258
93310-836V2	REC93310-836V2	245-247-258-259
93310-954U1	REC93310-954U1	245-247-258-259
93310-959U0	REC93310-959U0	247
93311-632U1	REC93311-632U1	239-258
93311-632U7	REC93311-632U7	231-257
93311-636U6	REC93311-636U6	241-257-258
93311-83280	REC93311-83280	331-335-337-383-399-400
93311-832U4	REC93311-832U4	239-258
93311-85894	REC93311-85894	335
93311-928U5	REC93311-928U5	329-381-397-398-399-400
93311-940U3	REC93311-940U3	245-247-258-259
93311-940V0	REC93311-940V0	247
93314-314V8	REC93341-214U1	291
93315-017U4	REC93315-017U4	353-394-395
93315-217U0	REC93315-217U0	363-395
93315-22004	REC93315-22004	295-353-355-357-394-395
93315-220V7	PAGB/T290F-2020	297
93315-220V7	REC93315-220V7	355-357-394-395
93315-314V8	REC93315-314V8	291-292-351-393-394
93315-317U2	REC93315-317U2	291-293-349-351-393-394
93315-32224	REC93315-32224	301-305-309-313-359-361-367-369-394-395-396
93315-324U1	REC93315-324U1	363-395
93315-325V1	REC93315-325V1	371
93315-325V1-00	REC93315-325V1	373
93315-425U7	REC93315-425U7	323-375-396-397
93315-425V3	REC93315-425V3	327-379-397-398-399-400
93315-43061	REC93315-43061	327-331-335-379-383-397-398-399-400
93315-430U8	REC93315-430U8	323-375-396-397-398-399-400
93315-628U9	REC93315-628U9	325-377-396-397-398
93316-003Y0	PANTN16003EY	283
93317-22204	REC93317-22204	299-303-307-311-359-361-365-369-394-395-396
93317-322V0	REC93317-322V0	315-319-396-397
93317-325U0	REC93317-325U0	315-319-371
93317-325U0-00	REC93317-325U0	373
93317-330U2	REC93317-330U2	325-329-333-339-377-381-385-396-397-398-399-400
93332-00001	REC93332-00001	301-305-309-313-357-361-369-394-395-396
93332-00003	REC93332-00003	299-303-307-361-365-369-394-395-396
93332-00005	REC93332-00005	291-293-295-349-351-353-355-393-394-395
93332-00048	REC93332-00048	327-331-397-398-399-400
93332-00079	PAT40-04000027	367
93332-00092	PAKOYOHI-CAP322/32	311
93332-000A5	REC93332-000A5	335
93332-000U0	REC93332-000U0	363-395
93332-000U3	REC93332-000U3	317-321-371
93332-000U3-00	REC93332-000U3	373
93332-000U7	REC93332-000U7	323-375-396-397
93332-000UE	REC93332-000UE	233-235-258
93332-000V3	REC93332-000V3	327-379-397-398-399-400
93332-000W1	REC93332-000W1	331-337-383-399-400
93332-000W5	PAHI-CAP32004JRKOYO	297
93332-000W7	REC93332-000W7	371
93332-000W7-00	REC93332-000W7	373
93332-000WS	REC93332-000W5	355-394-395
93340-67011	REC93340-67011	335-341
93341-214U1	REC93341-214U1	348

REF	R.O. / OEM	
93341-41414	REC93341-41414	351-393-394
93341-93020	REC93341-93020	333-385
93341-930U9	REC93341-93020	339
93341-930V2	REC93341-930V2	325-329-377-381-396-397-398-399-400
93342-624U0	REC93342-624U0	363
93390-000UO	REC93390-000U0	363-395
93399-99951	REC93399-99951	229-257
93420-22M03	PAGB/T893.1-22	287
93430-06005	PAGB/T896-86	343
93430-10M00	PAGB/T896-9	132
93440-08819	PAF2.6-03000012	283
93440-52008	REC93440-52009	227
93440-68M03	REC93440-68M03	233-235
93450-13022	REC93450-13022	221-223-225-262
93450-13130	PAF2.6-04020006	173
93450-14088	PAF4-04020006	175-219
93450-15023	PAF15-07020005	183-219
93450-15023	REC93450-15023	227-262
93450-17129	PAF20-05020002	189-219
93450-17129	PAF25-05020106	193-195-199-201-203-205-207-219-231
93501-04011	REC93501-04011	331-335-337-341-383
93503-16003	REC93503-16003	315-319-323-327-373-375-379
93507-32009	REC93507-32031	323-327
93507-32031	REC93507-32031	375-379
93511-32017	REC93511-32027	327
93511-32027	REC93511-32027	323-375-379
93602-14104	REC93602-14104	227-257-262
93602-14118	REC93602-14118	225-257-262
93602-18M12	REC93602-18M12	229
93602-20M02	REC93602-20M02	229-237-257-258-263-264
93603-18M09	REC93603-18M09	241-257-258-262-264
93603-21111	REC93310-32337	265
93603-21111	REC93603-21111	233-235-239-243-258-259-263-264-265
93604-07M13	PAF2.6-03000013	283
93604-08062	PAF25-04000007	214-223-239-301-305-309-313-349-357-363-367
93604-09066	PAF4-03000016	64-154-285-287-345
93604-09068	PAF2.6-03000013	343
93604-10M03	PAF15-00000013	201-317-351
93604-10M03	PAF25-04000007	195-203-205-297-321-355-371
93604-12M07	PAF15-00000013	171-173-283-289-291-293-351
93604-12M07	PAF15-07000013	183
93604-18080	PAF4-03000013	283-285-287-345
93605-14143	PAF25-05050016	193-199-207
93606-11M24	REC93606-12019	297
93606-12019	REC93606-12019	187-195-201-203-207-209-211-213-214-221-227-229-231-237-299-303-307-311-315-319-325-329-333-335-339-341-349-367-371-377-381-385
93606-42019	REC93606-12019	386
93608-12063	PAF15-00000014	233
93608-12063	PAF25-00000014	235-239-241-243
93608-12M05	REC93608-12M05	323-331-337-341-383
93700-06M03	PAJB/T9740.1-M6	132
94701-00110	NGKBR7HS	108
94701-00110-00	NGKBR7HS	108
94701-00195	NGKBR8HS	108
94701-00195-00	NGKBR8HS	108
94701-00204	NGKBR8ES	108
94701-00248-00	NGKBR6HS	108
94701-00282	NGKCR6HS	181
94701-00282-00	NGKCR6HS	108

REF	R.O. / OEM	
94701-00300-00	NGKCR5HSB	108
94701-00309-00	NGKBR9HS-10	108
94701-00365-00	NGKBR6FS	108
94701-00375	NGKDPR6EA-9	197-207
94701-00375	NGKDPR7EA-9	185-191
94701-00375-00	NGKDPR6EA-9	108
94701-00406-00	NGKDPR5EA-9	69-108
94702-00040	NGKB7HS	220-235-239
94702-00041	NGKB8HS	239
94702-00160	NGKB8HS-10	239
94702-00217	NGKB7HS-10	225-229
94702-00247	NGKBR8HS-10	237-241-245
94702-00247-00	NGKBR8HS-10	108
94702-00248	NGKBPR7HS	175
94702-00248	NGKBR6HS	173
94702-00249-00	NGKBR5HS	108
94702-00271	NGKB7HS-10	227
94702-00271	NGKBR7HS-10	223-229-231-237
94702-00271	NGKBR8HS-10	247
94702-00271-00	NGKBR7HS-10	108
94702-00272	NGKBR7HS	221
94702-00274	NGKBR6HS-10	180-223
94702-00274-00	NGKBR6HS-10	108
94702-00309	NGKBR9HS-10	245
94702-00372	NGKCR6HSB	64-173-179
94702-00372-00	NGKCR6HS	108
94702-00391	NGKLFR5A-11	209-211
94702-00391-00	NGKLFR5A-11	108
94702-00396	NGKBR8ES-11	108
94702-00400	NGKLFR6A-11	213-214
94702-00400-00	NGKLFR6A-11	108
94702-00404-00	NGKBKR7EKU	108
94702-00405-00	NGKBKR6EKU	108
94702-00409	NGKCR9EB	108
94702-00418	NGKDPR6EB-9	187-195-201-203
94702-00418-00	NGKDPR6EB-9	108
94702-00429	NGKLKR7E	205
94702-00429-00	NGKLKR7E	108
94702-00437-00	NGKLKR6E	71-108
947395-06040	PAGB/T5782-M6X45	349
95380-05600	PAGB/T889.1-M5	299-303-307-311-365
95380-06700	REC95380-06700	301-361
95817-06012	PAGB/T5783-M6X12	171
95817-06012-00	PAGB/T5783-M6X12	177
95895-06012	PAGB/T5783-M6X14	287
95895-06012	PAGB/T5783-M6X35	343-347
95895-06016	PAGB/T5783-M5X12	287-289
95895-06016-00	PAGB/T5783-M5X12	285
95895-06020	PAGB/T5783-M5X12	283
95895-06035	PAGB/T5782-M6X125	295
95895-06035	PAGB/T5783-M6X30	293
970-95-06030	PAGB/T5783-M6X30	231
97013-05010	PAGB/T5783-M5X10	179
97013-06012	PAGB/T5783-M6X12	189
97013-06016	PAGB/T5783-M5X12	185-223-229
97013-06035	PAF15-07000030	197
97013-06035	PAGB/T5782-M6X125	193
97013-06040	PAF20-05010007	187
97013-06045	PAGB/T5783-M5X12	171
97075-08025	PAGB/T5783-M8X25	209
97075-08035	PAGB/T5783-M8X35	289
97075-10040	REC97075-10040	299-303-307-311-319-369-370
97080-08025	PAGB/T5783-M8X25	289-291-292-351
97080-08045	REC97080-08045	289-291-351
97090-06014	PAGB/T5783-M6X16	343
97095-05012	PAGB/T5783-M5X12	191
97095-05012	PAGB/T818-M5X12	197-203-205-207
97095-05016	PAGB/T5783-M5X16	343
97095-0512	PAGB/T5783-M5X12	183
97095-06010	PAGB/T5783-M6X10	197-349-363
97095-06016	PAGB/T5783-M6X16	221-223-225-227-231-235-239-321-339

REF	R.O. / OEM	
97095-06016	**PAGB/T97.1-6**	371
97095-06020	**PAGB/T5783-M6X20**	171-173-179-180-191-195-197-201-203-205-207-209-213-233-237-241-291-347-351
97095-06020-00	**PAGB/T5783-M6X20**	175
97095-06025	**PAGB/T5782-M6X25**	209-213-231
97095-06030	**PAGB/T5783-M6X30**	180-211-213-343-346
97095-06030	**REC90101-06M56**	209
97095-06035	**PAGB/T5783-M5X12**	185
97095-06040	**REC97095-06040**	347-355
97095-06045	**REC97095-06045**	211-287-346
97095-08014	**PAGB/T5783-M8X14**	171-179
97095-08014-00	**PAGB/T5783-M8X14**	175
97095-08020	**PAF4-04000001**	331-335-337-341
97095-08020	**PAGB/T5783-M8X20**	179
97095-08020-00	**PAF4-04000001**	177
97095-08020-00	**PAGB/T5783-M8X20**	177
97095-08025	**PAGB/T5783-M8X25**	299-303-307-311-325-329-333-339
97095-08035	**PAGB/T5783-M8X35**	303-307-311
97095-08045	**REC97095-08045**	293-363-367-369
97095-08055	**REC97095-08055**	363-367-369
97395-06020	**PAGB/T5783-M6X20**	349
97395-08045	**REC97095-08045**	359
97395-08055	**REC97095-08055**	359
97395-08070-00	**REC97395-08070**	373
97513-06525	**PAGB/T5783-M6X25**	185
97575-06520	**PAGB/T5783-M6X20**	293
97575-08530	**PAGB/T5783-M8X30**	293
97575-08550-00	**PAGB/T5783-M5X12**	183
97575-08550-00	**PAGB/T5787-1986**	177
97595-06520	**PAGB/T5783-M6X20**	185-187
97595-06520	**PAGB/T97.1-8**	183-191
97607-04210	**PAGB/T818-M4X10**	187
97780-40112	**PAGB/T845-ST4.2X16**	349
97780-50510	**PAGB/T845-ST4.8X9**	349
97880-05025	**PAGB/T818-M5X25**	173-179-203-205

REF	R.O. / OEM	
97880-05025-00	**PAGB/T818-M5X25**	175
98503-04066-00	**PAGB/T818-M4X6**	177
98507-04010	**PAGB/T818-M4X10**	195-197-201-203-205-207
98580-06016	**PAGB/T818-M6X16**	365
98780-04015	**PAGB/T820-M4X12**	213-239
98780-04016	**PAGB/T820-M4X12**	187-209-237
98780-05016	**PAGB/T818-M5X16**	211
98980-05025	**PAGB/T818-M5X25**	187
99001-06600	**PAGB/T896-86**	283-285-345
99001-06600	**REC99001-06600**	287-346
99001-08600	**REC99001-08600-00**	305-309-313-317-321-325-329-333-335-339-369-371-377-381-385
99080-10600	**PAGB/T896-9**	132
99510-10114	**PAF15-07000001**	180-183-185
99510-10114	**PAF4-04000003**	175-177-179
99530-08012	**PAF25-00000014**	191-197-201-203-205-207
99590-10114	**REC99590-10114**	337-383
99999-02808	**REC99999-02808**	134
99999-03116	**PAF15-01010301S**	131
99999-03249	**PH130-0007**	111
99999-03938	**PH130-0051**	110
B7H-S0000-00-00	**NGKBR7HS**	233
CS3-43880-00	**PH200-T036**	122
F5-85570-13	**REC6F5-85570-11**	105
JA9-12153-00	**PA166F-000001**	173-175-179
K0A-A3721-00	**RECK0A-A3721-00**	209
K0A-A3722-00	**RECK0A-A3722-00**	209
MAR-6YT30-02-12	**SOL3231-101-13**	402
N26-13440-00	**RECN26-13440-00**	83-214
N26-13440-02	**RECN26-13440-00**	83
N51-11325-01	**TEN01160T**	167
YMD-63021-01	**REC2TU6**	84
YMD-63021-04	**REC2TU3**	84
YMD-63050-01	**REC10W30U6**	84
YMD-63050-04	**REC10W30U3**	84
YMD-63060-01	**REC10W40U6**	84
YMD-63060-04	**REC10W40U3**	84
YMD-RCBOX-00-10	**GS40015**	126

REF	R.O. / OEM	
YMM-21005-00-00	**PRE3300C05**	130
YMM-21006-C8-00	**PRE3300C06**	130
YMM-21007-C8-00	**PRE3300C07**	130
YMM-21008-C8-00	**PRE3300C08**	130
YMM-21009-C8-00	**PRE3300C09**	130
YMM-21010-C8-00	**PRE3300C10**	130
YMM-21011-C8-00	**PRE3300C11**	130
YMM-21012-C8-00	**PRE3300C12**	130
YMM-21013-C8-00	**PRE3300C13**	130
YMM-21014-C8-00	**PRE3300C14**	130
YMM-21015-C8-00	**PRE3300C15**	130
YMM-21016-C8-00	**PRE3300C16**	130
YMM-21017-C8-00	**PRE3300C17**	130
YMM-21018-C8-00	**PRE3300C18**	130
YMM-21019-C8-00	**PRE3300C19**	130
YMM-21020-C8-00	**PRE3300C20**	130
YMM-21021-C8-00	**PRE3300C21**	130
YMM-21022-C8-00	**PRE3300C22**	130
YMM-21023-C8-00	**PRE3300C23**	130
YMM-21024-C8-00	**PRE3300C24**	130
YMM-21025-C8-00	**PRE3300C25**	130
YMM-21026-C8-00	**PRE3300C26**	130
YMM-21027-C8-00	**PRE3300C27**	130
YMM-21028-C8-00	**PRE3300C28**	130
YMM-21029-C8-00	**PRE3300C29**	130
YMM-21030-C8-00	**PRE3300C30**	130
YMM-2E114-00	**RACS3240**	79
YMM-2E227-00	**RACS3227**	79
YMM-2E227-01	**RACS3227**	79
YMM-2W114-00	**RAC120R-RAC-01**	79
YMM-2W227-01	**RAC490R-RAC-01**	79